MBR(F,B)1535CT thru MBR(F,B)1560CT

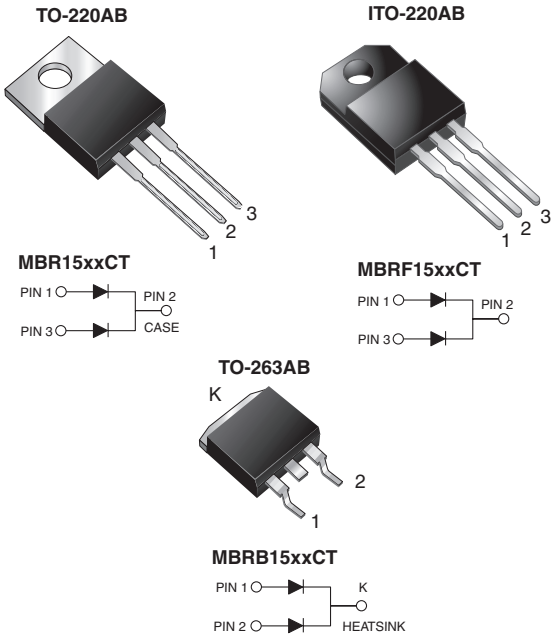

FEATURES

- Guardring for overvoltage protection
- Lower power losses, high efficiency
- Low forward voltage drop
- High forward surge capability
- High frequency operation
- Meets MSL level 1, per J-STD-020, LF maximum peak of 245 °C (for TO-263AB package)
- Solder dip 260 °C, 40 s (for TO-220AB and ITO-220AB package)
- Component in accordance to RoHS 2002/95/EC and WEEE 2002/96/EC

RoHS COMPLIANT

TYPICAL APPLICATIONS

For use in high frequency rectifier of switching mode power supplies, freewheeling diodes, dc-to-dc converters or polarity protection application.

MECHANICAL DATA

Case: TO-220AB, ITO-220AB, TO-263AB

Epoxy meets UL 94V-0 flammability rating

Terminals: Matte tin plated leads, solderable per J-STD-002 and JESD22-B102

E3 suffix for consumer grade, meets JESD 201 class 1A whisker test, HE3 suffix for high reliability grade (AEC Q101 qualified), meets JESD 201 class 2 whisker test

Polarity: As marked

Mounting Torque: 10 in-lbs maximum

PRIMARY CHARACTERISTICS	
$I_{F(AV)}$	7.5 A x 2
V_{RRM}	35 V to 60 V
I_{FSM}	150 A
V_F	0.57 V, 0.65 V
T_J max.	150 °C

MAXIMUM RATINGS (T_C = 25 °C unless otherwise noted)

PARAMETER		SYMBOL	MBR1535CT	MBR1545CT	MBR1550CT	MBR1560CT	UNIT
Maximum repetitive peak reverse voltage		V_{RRM}	35	45	50	60	V
Working peak reverse voltage		V_{RWM}	35	45	50	60	V
Maximum DC blocking voltage		V_{DC}	35	45	50	60	V
Maximum average forward rectified current at T_C = 105 °C	total device per diode	$I_{F(AV)}$	15 7.5				A
Peak forward surge current 8.3 ms single half sine-wave superimposed on rated load per diode		I_{FSM}	150				A
Peak repetitive reverse surge current per diode at t_p = 2.0 µs, 1 kHz		I_{RRM}	1.0		0.5		A
Voltage rate of change (rated V_R)		dV/dt	10 000				V/µs
Operating junction temperature range		T_J	- 65 to + 150				°C

MAXIMUM RATINGS (T_C = 25 °C unless otherwise noted)						
PARAMETER	**SYMBOL**	**MBR1535CT**	**MBR1545CT**	**MBR1550CT**	**MBR1560CT**	**UNIT**
Storage temperature range	T_{STG}	- 65 to + 175				°C
Isolation voltage (ITO-220AB only) from terminal to heatsink t = 1 min	V_{AC}	1500				V

ELECTRICAL CHARACTERISTICS (T_C = 25 °C unless otherwise noted)								
PARAMETER	**TEST CONDITIONS**		**SYMBOL**	**MBR1535CT**	**MBR1545CT**	**MBR1550CT**	**MBR1560CT**	**UNIT**
Maximum instantaneous forward voltage per diode (1)	I_F = 7.5 A I_F = 7.5 A I_F = 15 A I_F = 15 A	T_C = 25 °C T_C = 125 °C T_C = 25 °C T_C = 125 °C	V_F	-	0.57 0.84 0.72	0.75 0.65 - -		V
Maximum instantaneous reverse current at rated DC blocking voltage per diode (1)		T_C = 25 °C T_C = 125 °C	I_R	0.1 15		1.0 50		mA

Note:

(1) Pulse test: 300 µs pulse width, 1 % duty cycle

THERMAL CHARACTERISTICS (T_C = 25 °C unless otherwise noted)					
PARAMETER	**SYMBOL**	**MBR**	**MBRF**	**MBRB**	**UNIT**
Maximum thermal resistance per diode	$R_{\theta JA}$ $R_{\theta JC}$	60 3.0	- 5.0	60 3.0	°C/W

ORDERING INFORMATION (Example)					
PACKAGE	**PREFERRED P/N**	**UNIT WEIGHT (g)**	**PACKAGE CODE**	**BASE QUANTITY**	**DELIVERY MODE**
TO-220AB	MBR1545CT-E3/45	1.85	45	50/tube	Tube
ITO-220AB	MBRF1545CT-E3/45	1.99	45	50/tube	Tube
TO-263AB	MBRB1545CT-E3/45	1.35	45	50/tube	Tube
TO-263AB	MBRB1545CT-E3/81	1.35	81	800/reel	Tape reel
TO-220AB	MBR1545CTHE3/45 (1)	1.85	45	50/tube	Tube
ITO-220AB	MBRF1545CTHE3/45 (1)	1.99	45	50/tube	Tube
TO-263AB	MBRB1545CTHE3/45 (1)	1.35	45	50/tube	Tube
TO-263AB	MBRB1545CTHE3/81 (1)	1.35	81	800/reel	Tape reel

Note:

(1) Automotive grade AEC Q101 qualified

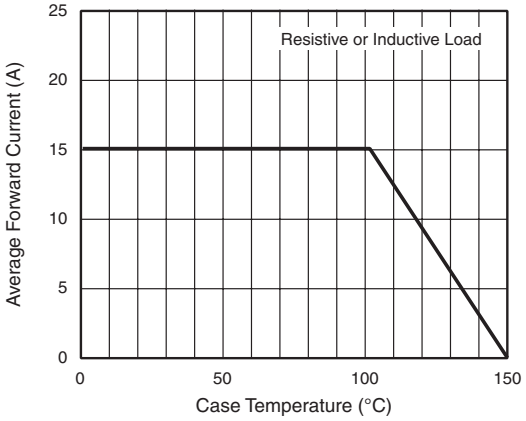

Figure 1. Forward Current Derating Curve

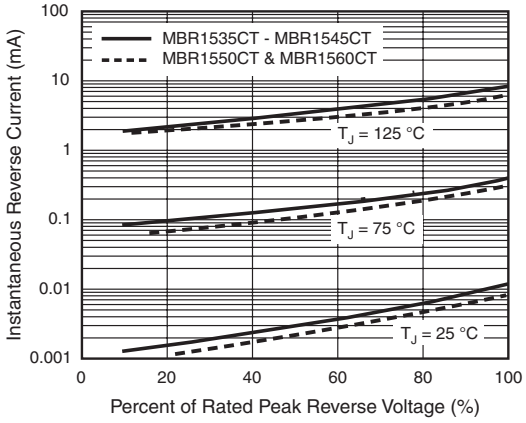

Figure 4. Typical Reverse Characteristics Per Diode

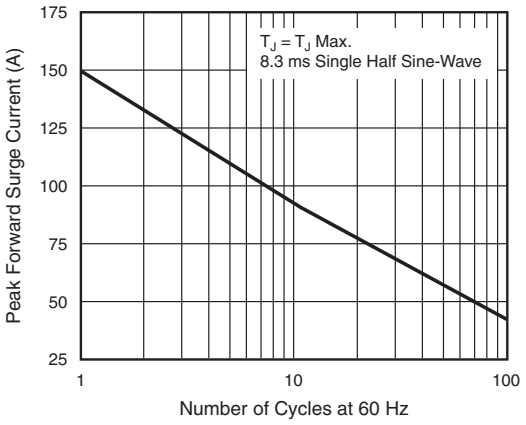

Figure 2. Maximum Non-Repetitive Peak Forward Surge Current Per Diode

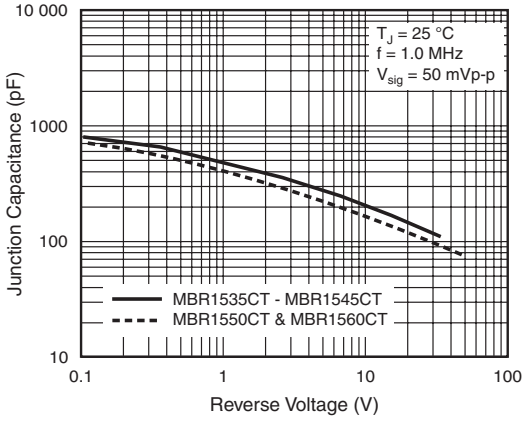

Figure 5. Typical Junction Capacitance Per Diode

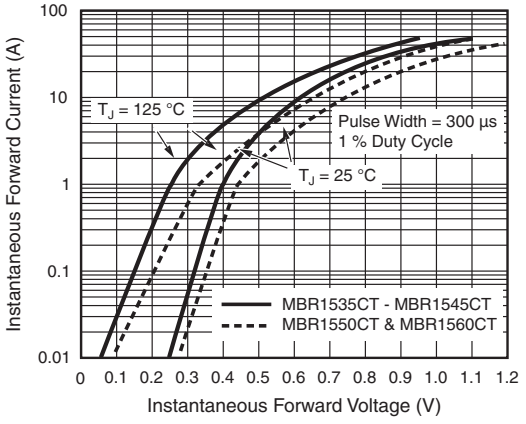

Figure 3. Typical Instantaneous Forward Characteristics Per Diode

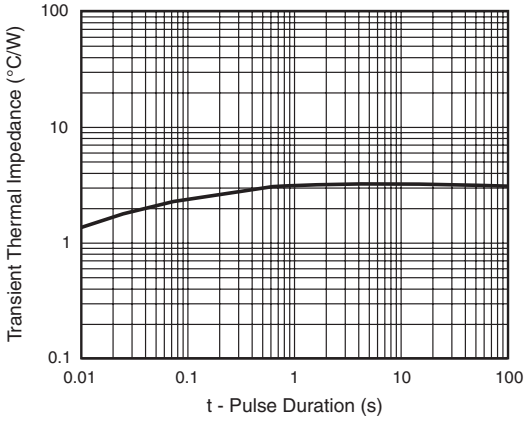

Figure 6. Typical Transient Thermal Impedance Per Diode

PACKAGE OUTLINE DIMENSIONS

TO-220AB

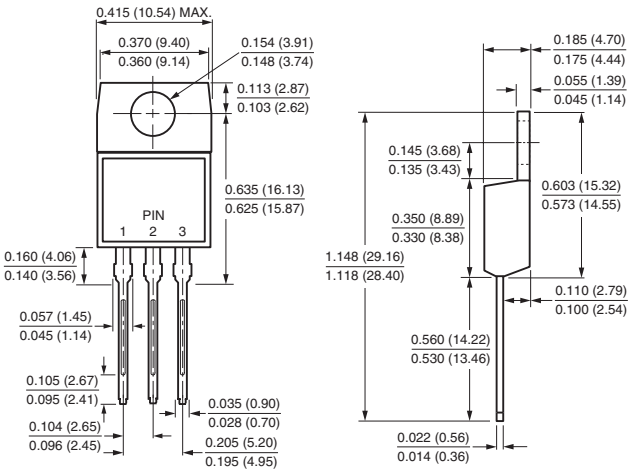

ITO-220AB

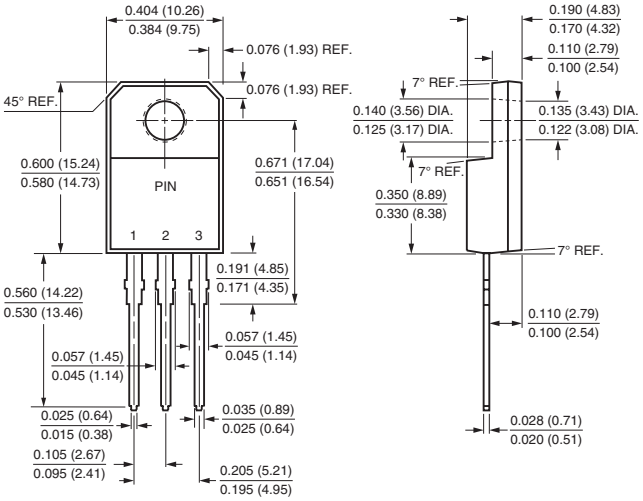

TO-263AB

