TMUX1119 5-V, Low-Leakage-Current, 2:1 Precision Switch

1 Features

- Wide supply range: 1.08 V to 5.5 V
- Low leakage current: 3 pA
- Low on-resistance: 1.8 Ω
- Low charge injection: –6 pC
- -40°C to +125°C Operating temperature
- 1.8 V Logic Compatible
- Fail-Safe Logic
- Rail to Rail Operation
- Bidirectional Signal Path
- Break-before-make switching
- ESD protection HBM: 2000 V

2 Applications

- Ultrasound scanners
- Patient monitoring & diagnostics
- Blood glucose monitors
- Optical module
- Optical transport
- Remote radio units
- Data acquisition systems
- Semiconductor test equipment
- Factory automation and industrial controls
- Flow transmitters
- Programmable logic controllers (PLC)
- Analog input modules
- Battery Test

3 Description

The TMUX1119 is a complementary metal-oxide semiconductor (CMOS) single-pole double-throw (2:1) switch. Wide operating supply of 1.08 V to 5.5 V allows for use in a broad array of applications from medical equipment to industrial systems. The device supports bidirectional analog and digital signals on the source (Sx) and drain (D) pins ranging from GND to V_{DD}. All logic inputs have 1.8 V logic compatible thresholds, ensuring both TTL and CMOS logic compatibility when operating in the valid supply voltage range. Fail-Safe Logic circuitry allows voltages on the control pins to be applied before the supply pin, protecting the device from potential damage.

The TMUX1119 is part of the precision switches and multiplexers family of devices. These devices have very low on and off leakage currents and low charge injection, allowing them to be used in high precision measurement applications. A low supply current of 3 nA and small package options enable use in portable applications.

Device Information[1]

PART NUMBER	PACKAGE	BODY SIZE (NOM)
TMUX1119	SC70 (6)	2.00 mm × 1.25 mm
	SOT-23 (6)	2.90 mm x 1.60 mm

(1) For all available packages, see the package option addendum at the end of the data sheet.

Application Example

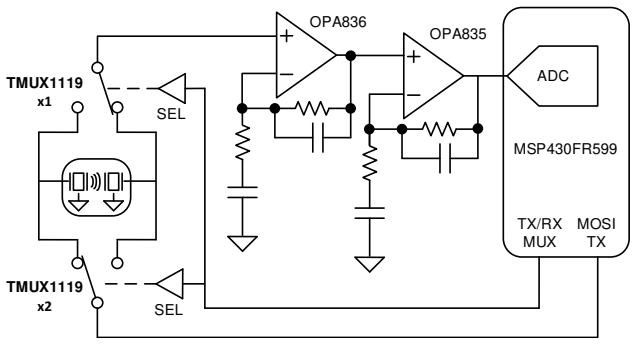

Block Diagram

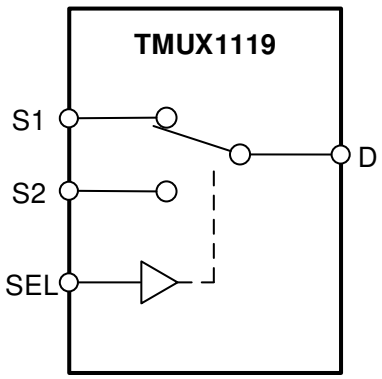

An IMPORTANT NOTICE at the end of this data sheet addresses availability, warranty, changes, use in safety-critical applications, intellectual property matters and other important disclaimers. PRODUCTION DATA.

Table of Contents

1 Features ... 1
2 Applications ... 1
3 Description ... 1
4 Revision History ... 2
5 Pin Configuration and Functions ... 3
6 Specifications ... 4
6.1 Absolute Maximum Ratings ... 4
6.2 ESD Ratings ... 4
6.3 Recommended Operating Conditions ... 4
6.4 Thermal Information ... 4
6.5 Electrical Characteristics (V_{DD} = 5 V ±10 %) ... 5
6.6 Electrical Characteristics (V_{DD} = 3.3 V ±10 %) ... 7
6.7 Electrical Characteristics (V_{DD} = 1.8 V ±10 %) ... 9
6.8 Electrical Characteristics (V_{DD} = 1.2 V ±10 %) ... 11
6.9 Typical Characteristics ... 13
7 Parameter Measurement Information ... 16
7.1 On-Resistance ... 16
7.2 Off-Leakage Current ... 16
7.3 On-Leakage Current ... 17
7.4 Transition Time ... 17
7.5 Break-Before-Make ... 18
7.6 Charge Injection ... 18
7.7 Off Isolation ... 19
7.8 Crosstalk ... 19
7.9 Bandwidth ... 20
8 Detailed Description ... 21
8.1 Overview ... 21
8.2 Functional Block Diagram ... 21
8.3 Feature Description ... 21
8.4 Device Functional Modes ... 23
8.5 Truth Tables ... 23
9 Application and Implementation ... 24
9.1 Application Information ... 24
9.2 Typical Application ... 24
9.3 Design Requirements ... 24
9.4 Detailed Design Procedure ... 25
9.5 Application Curve ... 25
10 Power Supply Recommendations ... 25
11 Layout ... 26
11.1 Layout Guidelines ... 26
11.2 Layout Example ... 26
12 Device and Documentation Support ... 27
12.1 Documentation Support ... 27
12.2 Related Links ... 27
12.3 Receiving Notification of Documentation Updates 27
12.4 Community Resources ... 27
12.5 Trademarks ... 27
12.6 Electrostatic Discharge Caution ... 27
12.7 Glossary ... 27
13 Mechanical, Packaging, and Orderable Information ... 27

4 Revision History

NOTE: Page numbers for previous revisions may differ from page numbers in the current version.

Changes from Revision A (November 2019) to Revision B **Page**

- Changed status of DBV package From: *Product Preview* To: *Production Data* ... 1
- Added Thermal information for DBV package ... 4

Changes from Original (December 2018) to Revision A **Page**

- Changed the data sheet title From: *Precision Analog Multiplexer* To: *Precision Switch* ... 1
- Changed the *Applications* list ... 1
- Changed Thermal Information for DCK package ... 4

Copyright © 2018–2020, Texas Instruments Incorporated

5 Pin Configuration and Functions

DCK Package
6-Pin SC70
Top View

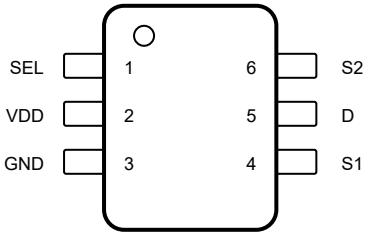

Not to scale

DBV Package
6-Pin SOT-23
Top View

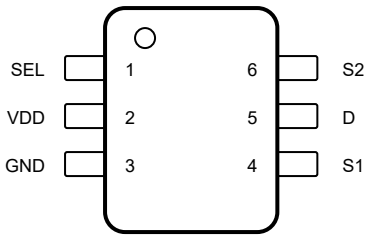

Not to scale

Pin Functions

PIN		TYPE(1)	DESCRIPTION
NAME	NO.		
SEL	1	I	Select pin: controls state of the switch according to Table 1. (Logic Low = S1 to D, Logic High = S2 to D)
VDD	2	P	Positive power supply. This pin is the most positive power-supply potential. For reliable operation, connect a decoupling capacitor ranging from 0.1 µF to 10 µF between V_{DD} and GND.
GND	3	P	Ground (0 V) reference
S1	4	I/O	Source pin 1. Can be an input or output.
D	5	I/O	Drain pin. Can be an input or output.
S2	6	I/O	Source pin 2. Can be an input or output.

(1) I = input, O = output, I/O = input and output, P = power

Copyright © 2018–2020, Texas Instruments Incorporated

6 Specifications

6.1 Absolute Maximum Ratings

Over operating free-air temperature range (unless otherwise noted).[1][2]

		MIN	MAX	UNIT
V_{DD}	Supply voltage	–0.5	6	V
V_{SEL} or V_{EN}	Logic control input pin voltage (SEL)	–0.5	6	V
I_{SEL} or I_{EN}	Logic control input pin current (SEL)	–30	30	mA
V_S or V_D	Source or drain voltage (Sx, D)	–0.5	V_{DD}+0.5	V
I_S or $I_{D\ (CONT)}$	Source or drain continuous current (Sx, D)	–30	30	mA
T_{stg}	Storage temperature	–65	150	°C
T_J	Junction temperature		150	°C

(1) Stresses beyond those listed under *Absolute Maximum Rating* may cause permanent damage to the device. These are stress ratings only, which do not imply functional operation of the device at these or any other conditions beyond those indicated under *Recommended Operating Condition*. Exposure to absolute-maximum-rated conditions for extended periods may affect device reliability.
(2) The algebraic convention, whereby the most negative value is a minimum and the most positive value is a maximum.

6.2 ESD Ratings

			VALUE	UNIT
$V_{(ESD)}$	Electrostatic discharge	Human body model (HBM), per ANSI/ESDA/JEDEC JS-001, all pins[1]	±2000	V
		Charged device model (CDM), per JEDEC specification JESD22-C101, all pins[2]	±750	

(1) JEDEC document JEP155 states that 500-V HBM allows safe manufacturing with a standard ESD control process.
(2) JEDEC document JEP157 states that 250-V CDM allows safe manufacturing with a standard ESD control process.

6.3 Recommended Operating Conditions

Over operating free-air temperature range (unless otherwise noted).

		MIN	NOM	MAX	UNIT
V_{DD}	Supply voltage	1.08		5.5	V
V_S or V_D	Signal path input and output voltage (source or drain pin) (Sx, D)	0		V_{DD}	V
V_{SEL}	Logic control input pin voltage (SEL)	0		5.5	V
T_A	Ambient temperature	–40		125	°C

6.4 Thermal Information

THERMAL METRIC[1]		TMUX1119		UNIT
		DCK (SC70)	DBV (SOT-23)	
		6 PINS	6 PINS	
$R_{\theta JA}$	Junction-to-ambient thermal resistance	243.1	212.3	°C/W
$R_{\theta JC(top)}$	Junction-to-case (top) thermal resistance	206.0	156.7	°C/W
$R_{\theta JB}$	Junction-to-board thermal resistance	128.3	96.5	°C/W
Ψ_{JT}	Junction-to-top characterization parameter	107.8	80.7	°C/W
Ψ_{JB}	Junction-to-board characterization parameter	128.0	96.2	°C/W
$R_{\theta JC(bot)}$	Junction-to-case (bottom) thermal resistance	N/A	N/A	°C/W

(1) For more information about traditional and new thermal metrics, see the Semiconductor and IC Package Thermal Metrics application report.

Copyright © 2018–2020, Texas Instruments Incorporated

6.5 Electrical Characteristics (V_{DD} = 5 V ±10 %)

At T_A = 25°C, V_{DD} = 5 V (unless otherwise noted).

PARAMETER		TEST CONDITIONS	TA	MIN	TYP	MAX	UNIT
ANALOG SWITCH							
R_{ON}	On-resistance	V_S = 0 V to V_{DD} I_{SD} = 10 mA Refer to On-Resistance	25°C		1.8	4	Ω
			–40°C to +85°C			4.5	Ω
			–40°C to +125°C			4.9	Ω
ΔR_{ON}	On-resistance matching between channels	V_S = 0 V to V_{DD} I_{SD} = 10 mA Refer to On-Resistance	25°C		0.13		Ω
			–40°C to +85°C			0.4	Ω
			–40°C to +125°C			0.5	Ω
$R_{ON\ FLAT}$	On-resistance flatness	V_S = 0 V to V_{DD} I_{SD} = 10 mA Refer to On-Resistance	25°C		0.85		Ω
			–40°C to +85°C			1.4	Ω
			–40°C to +125°C			1.6	Ω
$I_{S(OFF)}$	Source off leakage current(1)	V_{DD} = 5 V Switch Off V_D = 4.5 V / 1.5 V V_S = 1.5 V / 4.5 V Refer to Off-Leakage Current	25°C	–0.08	±0.005	0.08	nA
			–40°C to +85°C	–0.3		0.3	nA
			–40°C to +125°C	–0.9		0.9	nA
$I_{D(ON)}$ $I_{S(ON)}$	Channel on leakage current	V_{DD} = 5 V Switch On V_D = V_S = 2.5 V Refer to On-Leakage Current	25°C	–0.025	±0.003	0.025	nA
			–40°C to +85°C	–0.3		0.3	nA
			–40°C to +125°C	–0.95		0.95	nA
$I_{D(ON)}$ $I_{S(ON)}$	Channel on leakage current	V_{DD} = 5 V Switch On V_D = V_S = 4.5 V / 1.5 V Refer to On-Leakage Current	25°C	–0.1	±0.01	0.1	nA
			–40°C to +85°C	–0.35		0.35	nA
			–40°C to +125°C	–2		2	nA
LOGIC INPUTS (SEL)							
V_{IH}	Input logic high		–40°C to +125°C	1.49		5.5	V
V_{IL}	Input logic low		–40°C to +125°C	0		0.87	V
I_{IH} I_{IL}	Input leakage current		25°C		±0.005		µA
I_{IH} I_{IL}	Input leakage current		–40°C to +125°C			±0.05	µA
C_{IN}	Logic input capacitance		25°C		1		pF
C_{IN}	Logic input capacitance		–40°C to +125°C			2	pF
POWER SUPPLY							
I_{DD}	V_{DD} supply current	Logic inputs = 0 V or 5.5 V	25°C		0.003		µA
			–40°C to +125°C			1	µA

(1) When V_S is 4.5 V, V_D is 1.5 V, and vice versa.

Copyright © 2018–2020, Texas Instruments Incorporated

Electrical Characteristics (V_{DD} = 5 V ±10 %) (continued)

At T_A = 25°C, V_{DD} = 5 V (unless otherwise noted).

PARAMETER		TEST CONDITIONS	TA	MIN	TYP	MAX	UNIT
DYNAMIC CHARACTERISTICS							
t_{TRAN}	Switching time between channels	V_S = 3 V R_L = 200 Ω, C_L = 15 pF Refer to Transition Time	25°C		12		ns
			–40°C to +85°C			18	ns
			–40°C to +125°C			19	ns
t_{OPEN} (BBM)	Break before make time	V_S = 3 V R_L = 200 Ω, C_L = 15 pF Refer to Break-Before-Make	25°C		8		ns
			–40°C to +85°C	1			ns
			–40°C to +125°C	1			ns
Q_C	Charge Injection	V_D = 1 V R_S = 0 Ω, C_L = 1 nF Refer to Charge Injection	25°C		–6		pC
O_{ISO}	Off Isolation	R_L = 50 Ω, C_L = 5 pF f = 1 MHz Refer to Off Isolation	25°C		–65		dB
		R_L = 50 Ω, C_L = 5 pF f = 10 MHz Refer to Off Isolation	25°C		–45		dB
X_{TALK}	Crosstalk	R_L = 50 Ω, C_L = 5 pF f = 1 MHz Refer to Crosstalk	25°C		–65		dB
		R_L = 50 Ω, C_L = 5 pF f = 10 MHz Refer to Crosstalk	25°C		–45		dB
BW	Bandwidth	R_L = 50 Ω, C_L = 5 pF Refer to Bandwidth	25°C		250		MHz
C_{SOFF}	Source off capacitance	f = 1 MHz	25°C		6		pF
C_{SON} C_{DON}	On capacitance	f = 1 MHz	25°C		20		pF

Copyright © 2018–2020, Texas Instruments Incorporated

6.6 Electrical Characteristics (V_{DD} = 3.3 V ±10 %)

At T_A = 25°C, V_{DD} = 3.3 V (unless otherwise noted).

PARAMETER		TEST CONDITIONS	TA	MIN	TYP	MAX	UNIT
ANALOG SWITCH							
R_{ON}	On-resistance	V_S = 0 V to V_{DD} I_{SD} = 10 mA Refer to On-Resistance	25°C		3.7	8.8	Ω
			–40°C to +85°C			9.5	Ω
			–40°C to +125°C			9.8	Ω
ΔR_{ON}	On-resistance matching between channels	V_S = 0 V to V_{DD} I_{SD} = 10 mA Refer to On-Resistance	25°C		0.13		Ω
			–40°C to +85°C			0.4	Ω
			–40°C to +125°C			0.5	Ω
$R_{ON\ FLAT}$	On-resistance flatness	V_S = 0 V to V_{DD} I_{SD} = 10 mA Refer to On-Resistance	25°C		1.9		Ω
			–40°C to +85°C		2		Ω
			–40°C to +125°C		2.2		Ω
$I_{S(OFF)}$	Source off leakage current (1)	V_{DD} = 3.3 V Switch Off V_D = 3 V / 1 V V_S = 1 V / 3 V Refer to Off-Leakage Current	25°C	–0.05	±0.001	0.05	nA
			–40°C to +85°C	–0.1		0.1	nA
			–40°C to +125°C	–0.5		0.5	nA
$I_{D(ON)}$ $I_{S(ON)}$	Channel on leakage current	V_{DD} = 3.3 V Switch On V_D = V_S = 3 V / 1 V Refer to On-Leakage Current	25°C	–0.1	±0.005	0.1	nA
			–40°C to +85°C	–0.35		0.35	nA
			–40°C to +125°C	–2		2	nA
LOGIC INPUTS (SEL)							
V_{IH}	Input logic high		–40°C to +125°C	1.35		5.5	V
V_{IL}	Input logic low		–40°C to +125°C	0		0.8	V
I_{IH} I_{IL}	Input leakage current		25°C		±0.005		µA
I_{IH} I_{IL}	Input leakage current		-40°C to 125°C			±0.05	µA
C_{IN}	Logic input capacitance		25°C		1		pF
C_{IN}	Logic input capacitance		–40°C to +125°C			2	pF
POWER SUPPLY							
I_{DD}	V_{DD} supply current	Logic inputs = 0 V or 5.5 V	25°C		0.003		µA
			–40°C to +125°C			0.8	µA

(1) When V_S is 3 V, V_D is 1 V, and vice versa.

Electrical Characteristics (V_{DD} = 3.3 V ±10 %) (continued)

At T_A = 25°C, V_{DD} = 3.3 V (unless otherwise noted).

PARAMETER		TEST CONDITIONS	TA	MIN	TYP	MAX	UNIT
DYNAMIC CHARACTERISTICS							
t_{TRAN}	Switching time between channels	V_S = 2 V R_L = 200 Ω, C_L = 15 pF Refer to Transition Time	25°C		14		ns
			–40°C to +85°C			20	ns
			–40°C to +125°C			21	ns
t_{OPEN} (BBM)	Break before make time	V_S = 2 V R_L = 200 Ω, C_L = 15 pF Refer to Break-Before-Make	25°C		9		ns
			–40°C to +85°C	1			ns
			–40°C to +125°C	1			ns
Q_C	Charge Injection	V_D = 1 V R_S = 0 Ω, C_L = 1 nF Refer to Charge Injection	25°C		–6		pC
O_{ISO}	Off Isolation	R_L = 50 Ω, C_L = 5 pF f = 1 MHz Refer to Off Isolation	25°C		–65		dB
		R_L = 50 Ω, C_L = 5 pF f = 10 MHz Refer to Off Isolation	25°C		–45		dB
X_{TALK}	Crosstalk	R_L = 50 Ω, C_L = 5 pF f = 1 MHz Refer to Crosstalk	25°C		–65		dB
		R_L = 50 Ω, C_L = 5 pF f = 10 MHz Refer to Crosstalk	25°C		–45		dB
BW	Bandwidth	R_L = 50 Ω, C_L = 5 pF Refer to Bandwidth	25°C		250		MHz
C_{SOFF}	Source off capacitance	f = 1 MHz	25°C		6		pF
C_{SON} C_{DON}	On capacitance	f = 1 MHz	25°C		20		pF

Copyright © 2018–2020, Texas Instruments Incorporated

6.7 Electrical Characteristics (V_{DD} = 1.8 V ±10 %)

At T_A = 25°C, V_{DD} = 1.8 V (unless otherwise noted).

PARAMETER		TEST CONDITIONS	TA	MIN	TYP	MAX	UNIT
ANALOG SWITCH							
R_{ON}	On-resistance	V_S = 0 V to V_{DD} I_{SD} = 10 mA Refer to On-Resistance	25°C		40		Ω
			–40°C to +85°C			80	Ω
			–40°C to +125°C			80	Ω
ΔR_{ON}	On-resistance matching between channels	V_S = 0 V to V_{DD} I_{SD} = 10 mA Refer to On-Resistance	25°C		0.4		Ω
			–40°C to +85°C			1.5	Ω
			–40°C to +125°C			1.5	Ω
$I_{S(OFF)}$	Source off leakage current(1)	V_{DD} = 1.98 V Switch Off V_D = 1.62 V / 1 V V_S = 1 V / 1.62 V Refer to Off-Leakage Current	25°C	–0.05	±0.003	0.05	nA
			–40°C to +85°C	–0.1		0.1	nA
			–40°C to +125°C	–0.5		0.5	nA
$I_{D(ON)}$ $I_{S(ON)}$	Channel on leakage current	V_{DD} = 1.98 V Switch On V_D = V_S = 1.62 V / 1 V Refer to On-Leakage Current	25°C	–0.1	±0.005	0.1	nA
			–40°C to +85°C	–0.5		0.5	nA
			–40°C to +125°C	–2		2	nA
LOGIC INPUTS (SEL)							
V_{IH}	Input logic high		–40°C to +125°C	1.07		5.5	V
V_{IL}	Input logic low		–40°C to +125°C	0		0.68	V
I_{IH} I_{IL}	Input leakage current		25°C		±0.005		µA
I_{IH} I_{IL}	Input leakage current		–40°C to +125°C			±0.05	µA
C_{IN}	Logic input capacitance		25°C		1		pF
C_{IN}	Logic input capacitance		–40°C to +125°C			2	pF
POWER SUPPLY							
I_{DD}	V_{DD} supply current	Logic inputs = 0 V or 5.5 V	25°C		0.001		µA
			–40°C to +125°C			0.85	µA

(1) When V_S is 1.62 V, V_D is 1 V, and vice versa.

Copyright © 2018–2020, Texas Instruments Incorporated

Electrical Characteristics (V_{DD} = 1.8 V ±10 %) (continued)

At T_A = 25°C, V_{DD} = 1.8 V (unless otherwise noted).

PARAMETER		TEST CONDITIONS	TA	MIN	TYP	MAX	UNIT
DYNAMIC CHARACTERISTICS							
t_{TRAN}	Transition time between channels	V_S = 1 V R_L = 200 Ω, C_L = 15 pF Refer to Transition Time	25°C		28		ns
			–40°C to +85°C			44	ns
			–40°C to +125°C			44	ns
t_{OPEN} (BBM)	Break before make time	V_S = 1 V R_L = 200 Ω, C_L = 15 pF Refer to Break-Before-Make	25°C		16		ns
			–40°C to +85°C	1			ns
			–40°C to +125°C	1			ns
Q_C	Charge Injection	V_D = 1 V R_S = 0 Ω, C_L = 1 nF Refer to Charge Injection	25°C		–3		pC
O_{ISO}	Off Isolation	R_L = 50 Ω, C_L = 5 pF f = 1 MHz Refer to Off Isolation	25°C		–65		dB
		R_L = 50 Ω, C_L = 5 pF f = 10 MHz Refer to Off Isolation	25°C		–45		dB
X_{TALK}	Crosstalk	R_L = 50 Ω, C_L = 5 pF f = 1 MHz Refer to Crosstalk	25°C		–65		dB
		R_L = 50 Ω, C_L = 5 pF f = 10 MHz Refer to Crosstalk	25°C		–45		dB
BW	Bandwidth	R_L = 50 Ω, C_L = 5 pF	25°C		250		MHz
C_{SOFF}	Source off capacitance	f = 1 MHz	25°C		6		pF
C_{SON} C_{DON}	On capacitance	f = 1 MHz	25°C		20		pF

Copyright © 2018–2020, Texas Instruments Incorporated

6.8 Electrical Characteristics (V_{DD} = 1.2 V ±10 %)

At T_A = 25°C, V_{DD} = 1.2 V (unless otherwise noted).

PARAMETER		TEST CONDITIONS	TA	MIN	TYP	MAX	UNIT
ANALOG SWITCH							
R_{ON}	On-resistance	V_S = 0 V to V_{DD} I_{SD} = 10 mA Refer to On-Resistance	25°C		70		Ω
			–40°C to +85°C			105	Ω
			–40°C to +125°C			105	Ω
ΔR_{ON}	On-resistance matching between channels	V_S = 0 V to V_{DD} I_{SD} = 10 mA Refer to On-Resistance	25°C		0.4		Ω
			–40°C to +85°C			1.5	Ω
			–40°C to +125°C			1.5	Ω
$I_{S(OFF)}$	Source off leakage current(1)	V_{DD} = 1.32 V Switch Off V_D = 1 V / 0.8 V V_S = 0.8 V / 1 V Refer to Off-Leakage Current	25°C	–0.05	±0.003	0.05	nA
			–40°C to +85°C	–0.1		0.1	nA
			–40°C to +125°C	–0.5		0.5	nA
$I_{D(ON)}$ $I_{S(ON)}$	Channel on leakage current	V_{DD} = 1.32 V Switch On V_D = V_S = 1 V / 0.8 V Refer to On-Leakage Current	25°C	–0.1	±0.005	0.1	nA
			–40°C to +85°C	–0.5		0.5	nA
			–40°C to +125°C	–2		2	nA
LOGIC INPUTS (SEL)							
V_{IH}	Input logic high		–40°C to +125°C	0.96		5.5	V
V_{IL}	Input logic low		–40°C to +125°C	0		0.36	V
I_{IH} I_{IL}	Input leakage current		25°C		±0.005		µA
I_{IH} I_{IL}	Input leakage current		–40°C to +125°C			±0.05	µA
C_{IN}	Logic input capacitance		25°C		1		pF
C_{IN}	Logic input capacitance		–40°C to +125°C			2	pF
POWER SUPPLY							
I_{DD}	V_{DD} supply current	Logic inputs = 0 V or 5.5 V	25°C		0.003		µA
			–40°C to +125°C			0.7	µA

(1) When V_S is 1 V, V_D is 0.8 V, and vice versa.

Copyright © 2018–2020, Texas Instruments Incorporated

Electrical Characteristics (V_{DD} = 1.2 V ±10 %) (continued)

At T_A = 25°C, V_{DD} = 1.2 V (unless otherwise noted).

PARAMETER		TEST CONDITIONS	TA	MIN	TYP	MAX	UNIT
DYNAMIC CHARACTERISTICS							
t_{TRAN}	Transition time between channels	V_S = 1 V R_L = 200 Ω, C_L = 15 pF Refer to Transition Time	25°C		55		ns
			–40°C to +85°C			190	ns
			–40°C to +125°C			190	ns
t_{OPEN} (BBM)	Break before make time	V_S = 1 V R_L = 200 Ω, C_L = 15 pF Refer to Break-Before-Make	25°C		28		ns
			–40°C to +85°C	1			ns
			–40°C to +125°C	1			ns
Q_C	Charge Injection	V_D = 1 V R_S = 0 Ω, C_L = 1 nF Refer to Charge Injection	25°C		–2		pC
O_{ISO}	Off Isolation	R_L = 50 Ω, C_L = 5 pF f = 1 MHz Refer to Off Isolation	25°C		–65		dB
		R_L = 50 Ω, C_L = 5 pF f = 10 MHz Refer to Off Isolation	25°C		–45		dB
X_{TALK}	Crosstalk	R_L = 50 Ω, C_L = 5 pF f = 1 MHz Refer to Crosstalk	25°C		–65		dB
		R_L = 50 Ω, C_L = 5 pF f = 10 MHz Refer to Crosstalk	25°C		–45		dB
BW	Bandwidth	R_L = 50 Ω, C_L = 5 pF	25°C		250		MHz
C_{SOFF}	Source off capacitance	f = 1 MHz	25°C		6		pF
C_{SON} C_{DON}	On capacitance	f = 1 MHz	25°C		20		pF

Copyright © 2018–2020, Texas Instruments Incorporated

6.9 Typical Characteristics

at T_A = 25°C, V_{DD} = 5 V (unless otherwise noted)

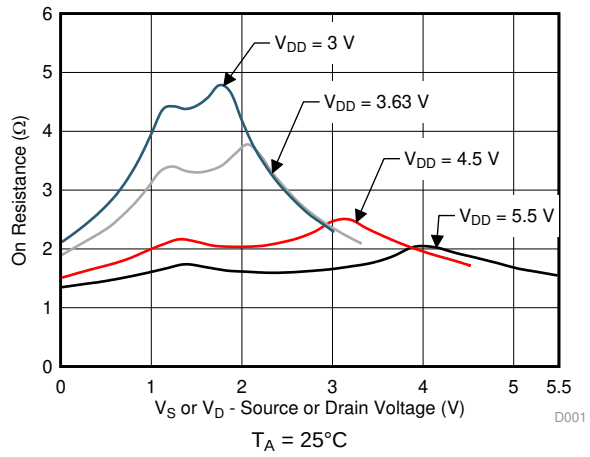

Figure 1. On-Resistance vs Source or Drain Voltage

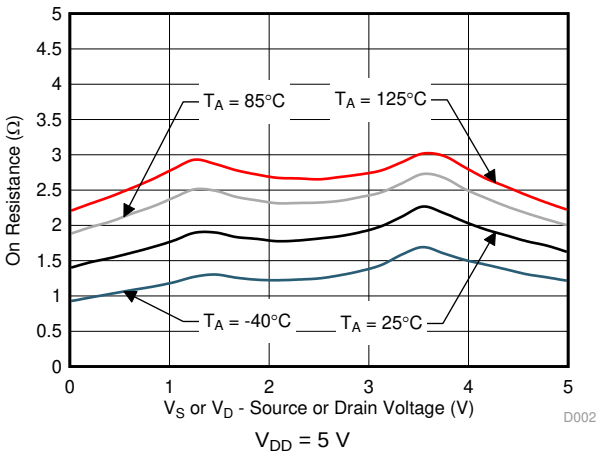

Figure 2. On-Resistance vs Temperature

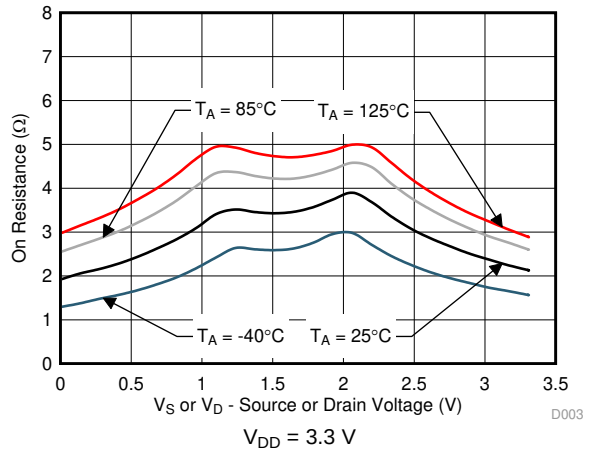

Figure 3. On-Resistance vs Temperature

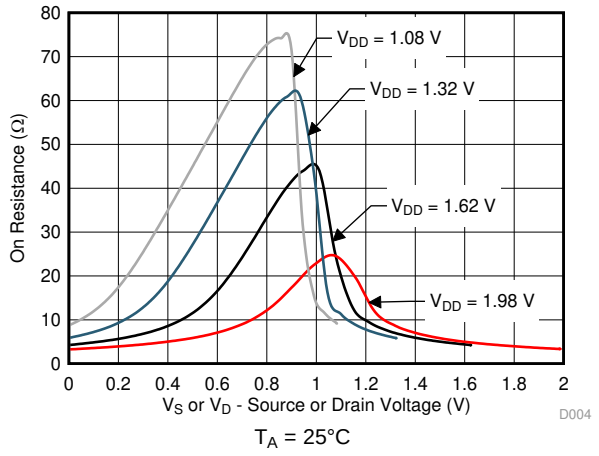

Figure 4. On-Resistance vs Source or Drain Voltage

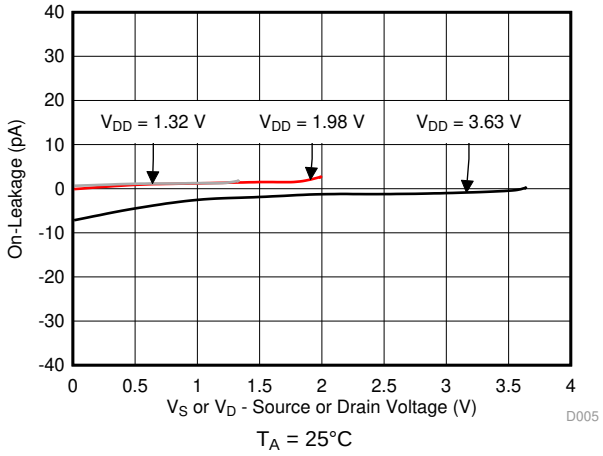

Figure 5. On-Leakage vs Source or Drain Voltage

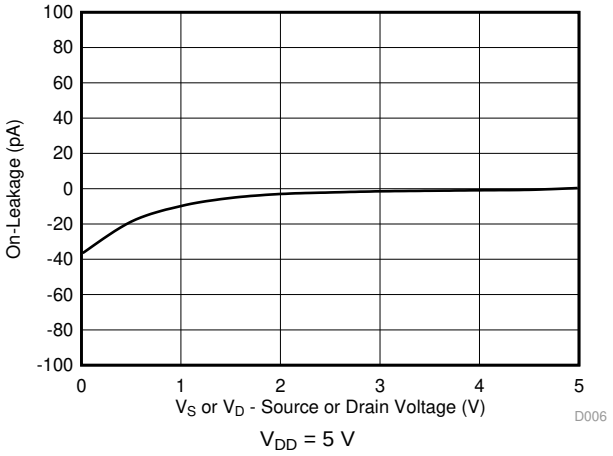

Figure 6. On-Leakage vs Source or Drain Voltage

Typical Characteristics (continued)

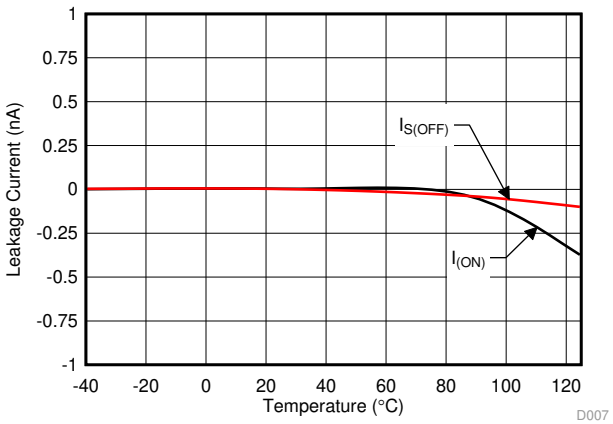

V_{DD} = 3.3 V

Figure 7. Leakage Current vs Temperature

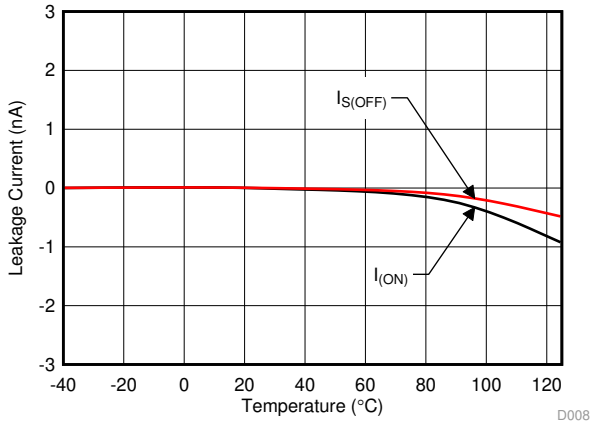

V_{DD} = 5 V

Figure 8. Leakage Current vs Temperature

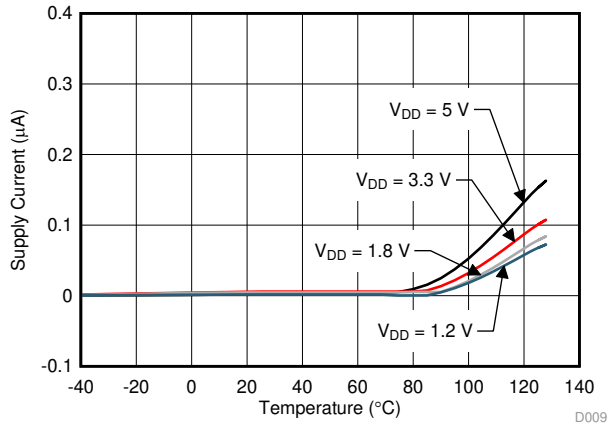

V_{SEL} = 5.5 V

Figure 9. Supply Current vs Temperature

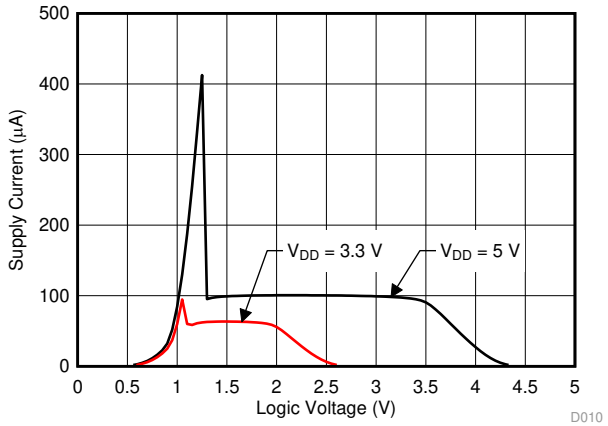

T_A = 25°C

Figure 10. Supply Current vs Logic Voltage

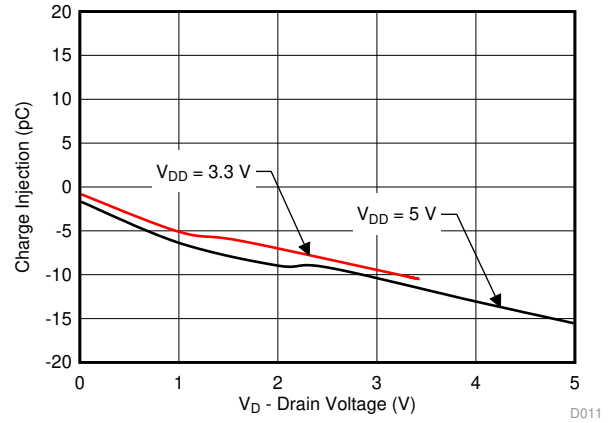

T_A = -40°C to 125°C

Figure 11. Charge Injection vs Drain Voltage

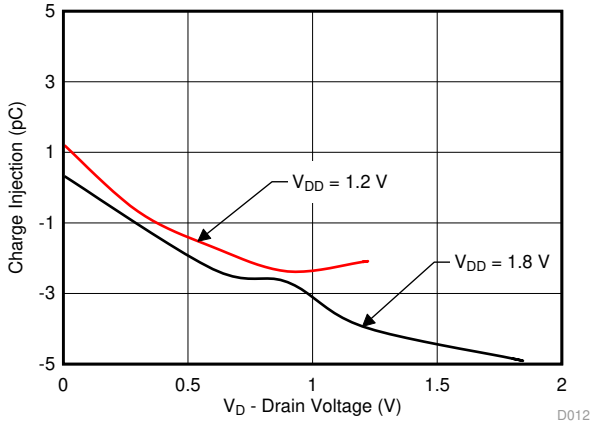

T_A = -40°C to 125°C

Figure 12. Charge Injection vs Drain Voltage

Copyright © 2018–2020, Texas Instruments Incorporated

Typical Characteristics (continued)

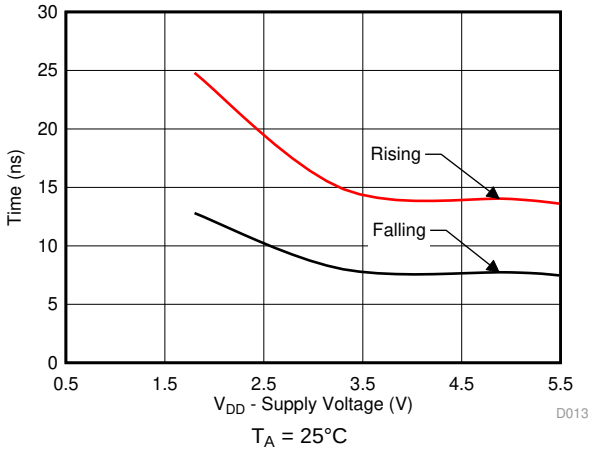

Figure 13. Output $T_{TRANSITION}$ vs Supply Voltage

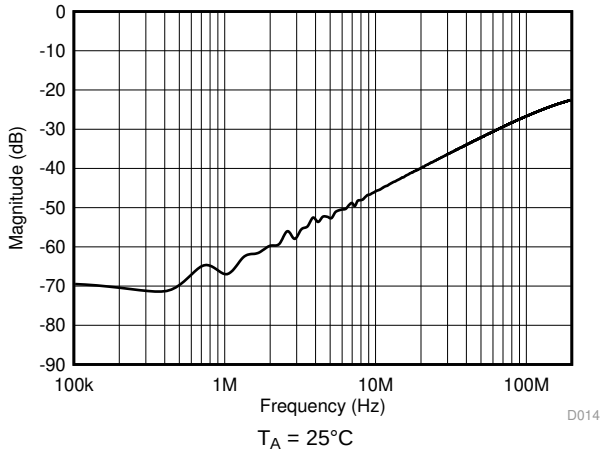

Figure 14. Xtalk and Off-Isolation vs Frequency

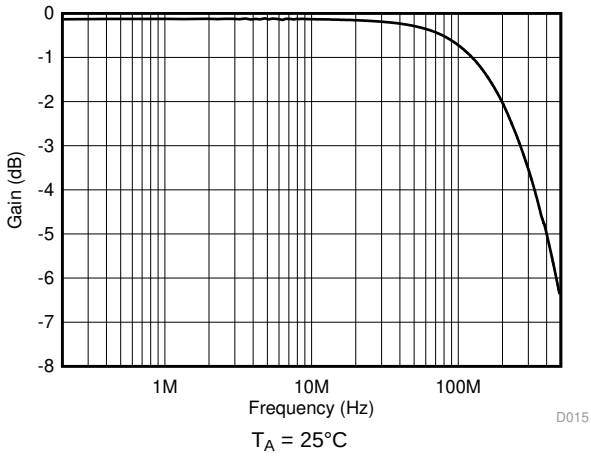

Figure 15. On Response vs Frequency

7 Parameter Measurement Information

7.1 On-Resistance

The on-resistance of a device is the ohmic resistance between the source (Sx) and drain (D) pins of the device. The on-resistance varies with input voltage and supply voltage. The symbol R_{ON} is used to denote on-resistance. The measurement setup used to measure R_{ON} is shown in Figure 16. Voltage (V) and current (I_{SD}) are measured using this setup, and R_{ON} is computed with $R_{ON} = V / I_{SD}$:

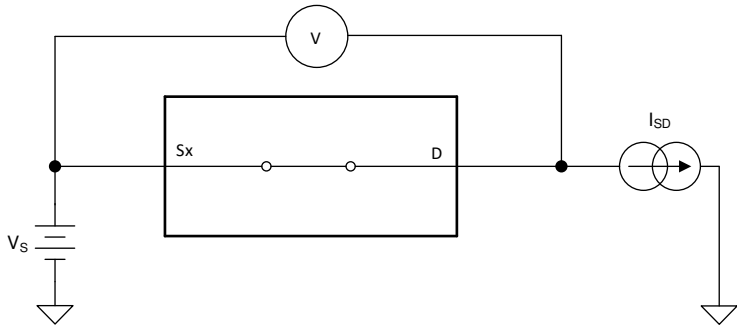

Figure 16. On-Resistance Measurement Setup

7.2 Off-Leakage Current

Source leakage current is defined as the leakage current flowing into or out of the source pin when the switch is off. This current is denoted by the symbol $I_{S(OFF)}$.

The setup used to measure off-leakage current is shown in Figure 17.

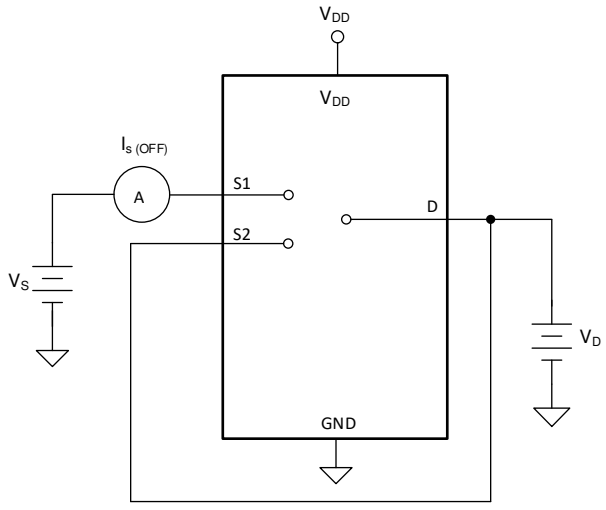

Figure 17. Off-Leakage Measurement Setup

Copyright © 2018–2020, Texas Instruments Incorporated

7.3 On-Leakage Current

Source on-leakage current is defined as the leakage current flowing into or out of the source pin when the switch is on. This current is denoted by the symbol $I_{S(ON)}$.

Drain on-leakage current is defined as the leakage current flowing into or out of the drain pin when the switch is on. This current is denoted by the symbol $I_{D(ON)}$.

Either the source pin or drain pin is left floating during the measurement. Figure 18 shows the circuit used for measuring the on-leakage current, denoted by $I_{S(ON)}$ or $I_{D(ON)}$.

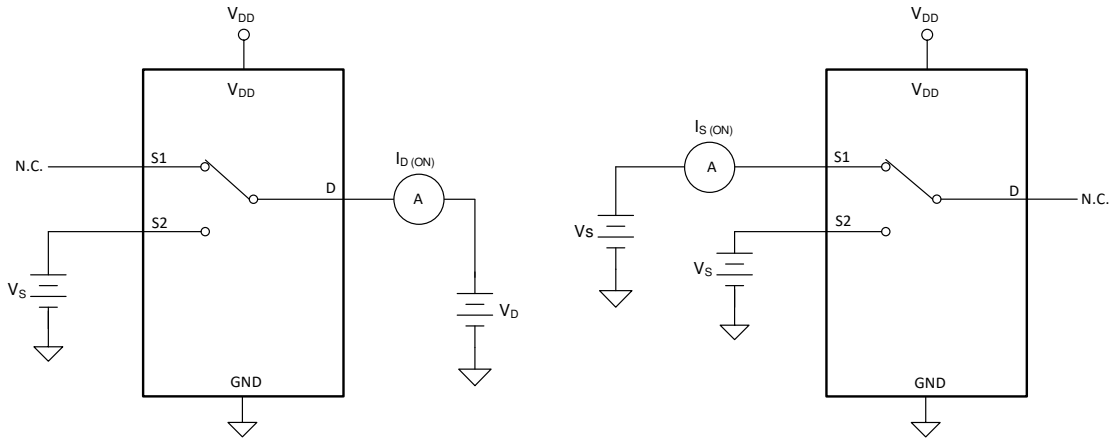

Figure 18. On-Leakage Measurement Setup

7.4 Transition Time

Transition time is defined as the time taken by the output of the device to rise or fall 10% after the address signal has risen or fallen past the logic threshold. The 10% transition measurement is utilized to provide the timing of the device. System level timing can then account for the time constant added from the load resistance and load capacitance. Figure 19 shows the setup used to measure transition time, denoted by the symbol $t_{TRANSITION}$.

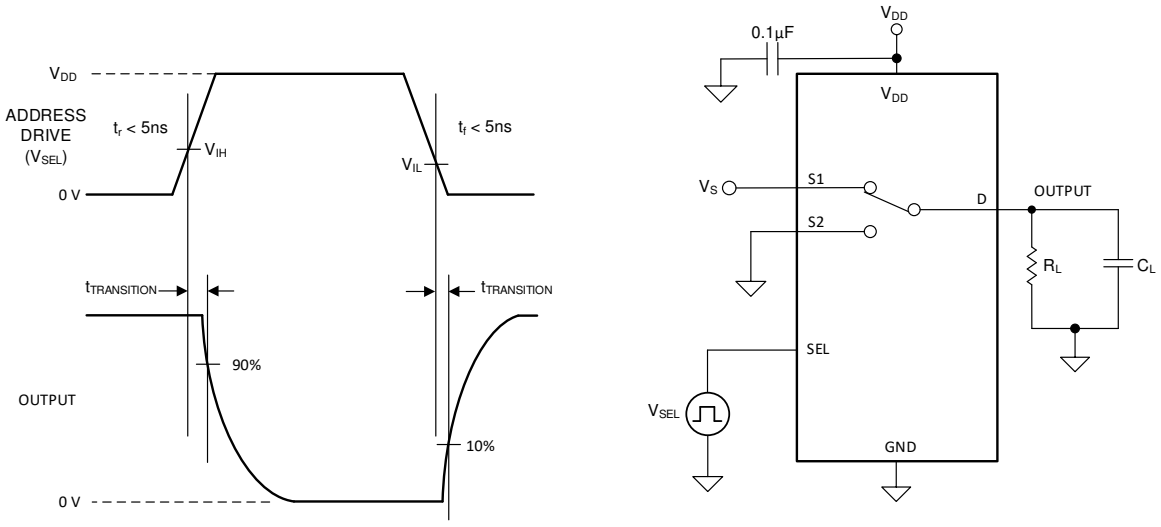

Figure 19. Transition-Time Measurement Setup

7.5 Break-Before-Make

Break-before-make delay is a safety feature that prevents two inputs from connecting when the device is switching. The output first breaks from the on-state switch before making the connection with the next on-state switch. The time delay between the *break* and the *make* is known as break-before-make delay. Figure 20 shows the setup used to measure break-before-make delay, denoted by the symbol $t_{OPEN(BBM)}$.

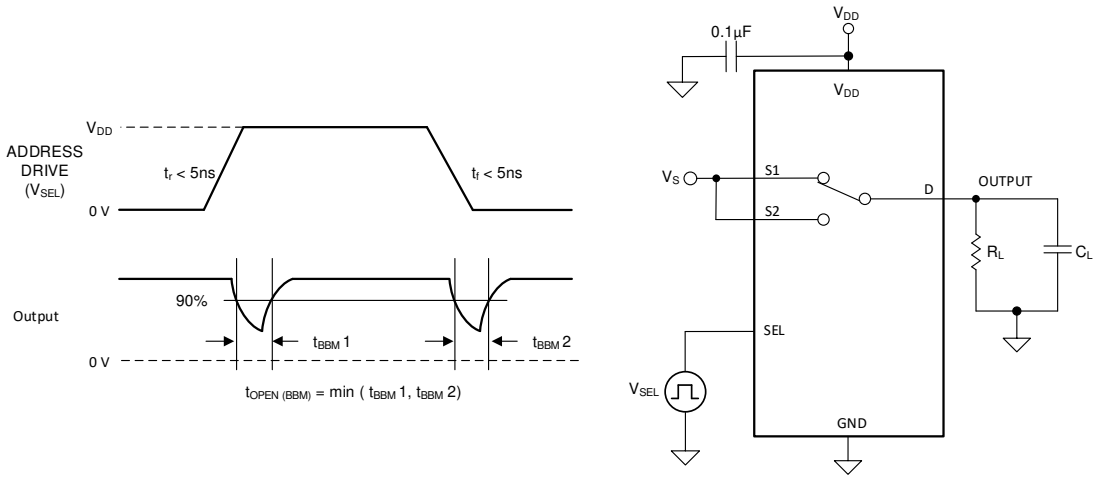

Figure 20. Break-Before-Make Delay Measurement Setup

7.6 Charge Injection

The TMUX1119 has a transmission-gate topology. Any mismatch in capacitance between the NMOS and PMOS transistors results in a charge injected into the drain or source during the falling or rising edge of the gate signal. The amount of charge injected into the source or drain of the device is known as charge injection, and is denoted by the symbol Q_C. Figure 21 shows the setup used to measure charge injection from Drain (D) to Source (Sx).

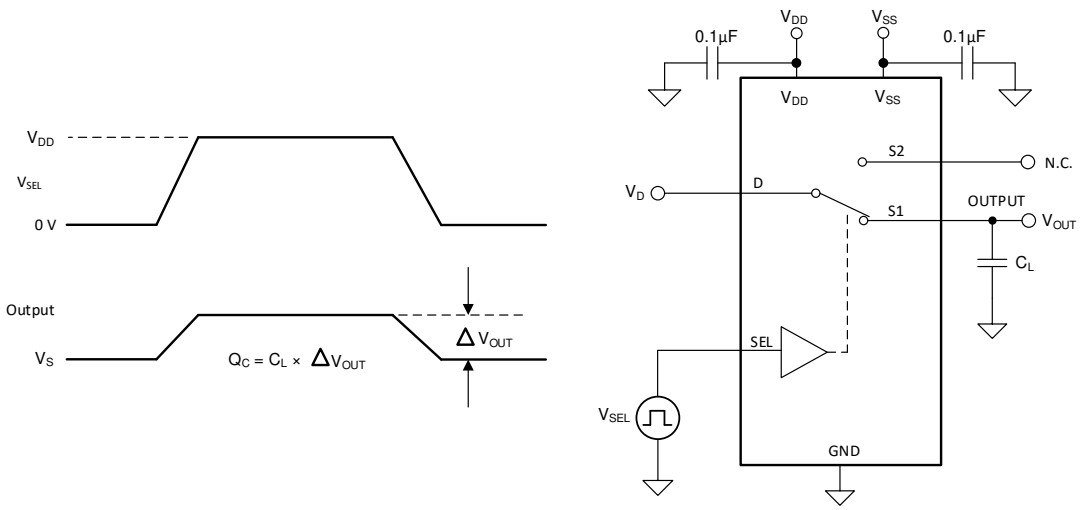

Figure 21. Charge-Injection Measurement Setup

Copyright © 2018–2020, Texas Instruments Incorporated

7.7 Off Isolation

Off isolation is defined as the ratio of the signal at the drain pin (D) of the device when a signal is applied to the source pin (Sx) of an off-channel. Figure 22 shows the setup used to measure, and the equation used to calculate off isolation.

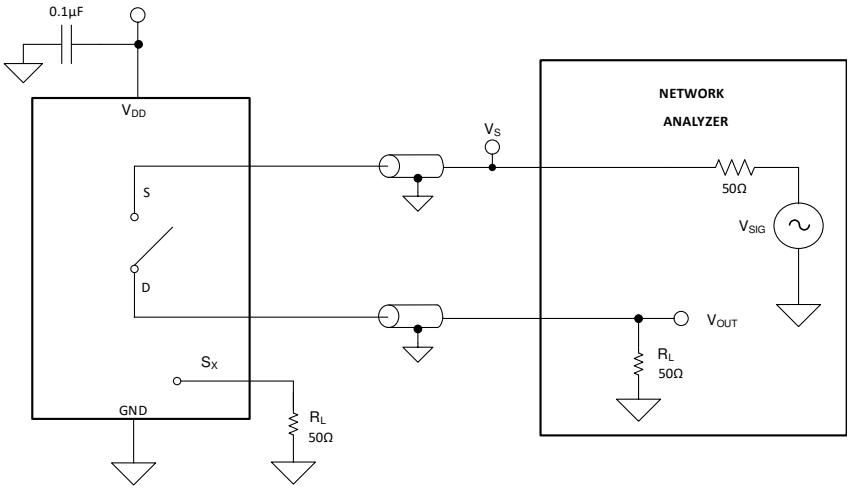

Figure 22. Off Isolation Measurement Setup

$$\text{Off Isolation} = 20 \cdot \text{Log}\left(\frac{V_{OUT}}{V_S}\right) \quad (1)$$

7.8 Crosstalk

Crosstalk is defined as the ratio of the signal at the drain pin (D) of a different channel, when a signal is applied at the source pin (Sx) of an on-channel. Figure 23 shows the setup used to measure, and the equation used to calculate crosstalk.

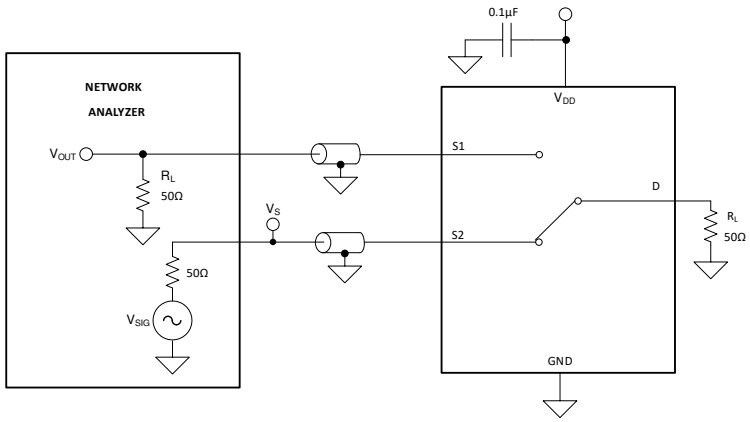

Figure 23. Crosstalk Measurement Setup

$$\text{Channel-to-Channel Crosstalk} = 20 \cdot \text{Log}\left(\frac{V_{OUT}}{V_S}\right) \quad (2)$$

7.9 Bandwidth

Bandwidth is defined as the range of frequencies that are attenuated by less than 3 dB when the input is applied to the source pin (Sx) of an on-channel, and the output is measured at the drain pin (D) of the device. Figure 24 shows the setup used to measure bandwidth.

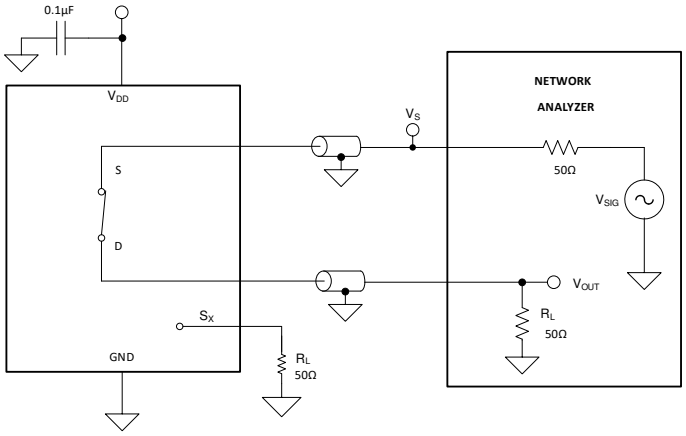

Figure 24. Bandwidth Measurement Setup

Copyright © 2018–2020, Texas Instruments Incorporated

8 Detailed Description

8.1 Overview

The TMUX1119 is an 2:1, 1-ch. (SPDT), analog switch where the input is controlled with a single select (SEL) control pin.

8.2 Functional Block Diagram

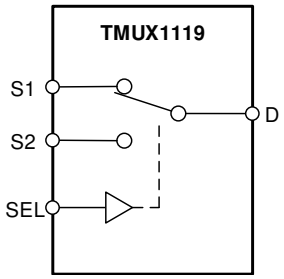

Figure 25. TMUX1119 Functional Block Diagram

8.3 Feature Description

8.3.1 Bidirectional Operation

The TMUX1119 conducts equally well from source (Sx) to drain (D) or from drain (D) to source (Sx). The device has very similar characteristics in both directions and supports both analog and digital signals.

8.3.2 Rail to Rail Operation

The valid signal path input/output voltage for TMUX1119 ranges from GND to V_{DD}.

8.3.3 1.8 V Logic Compatible Inputs

The TMUX1119 has 1.8-V logic compatible control for the logic control input (SEL). The logic input threshold scales with supply but still provide 1.8-V logic control when operating at 5.5 V supply voltage. 1.8-V logic level inputs allow the TMUX1119 to interface with processors that have lower logic I/O rails and eliminates the need for an external translator, which saves both space and BOM cost. For more information on 1.8 V logic implementations refer to *Simplifying Design with 1.8 V logic Muxes and Switches*

8.3.4 Fail-Safe Logic

The TMUX1119 supports Fail-Safe Logic on the control input pin (SEL) allowing for operation up to 5.5 V, regardless of the state of the supply pin. This feature allows voltages on the control pin to be applied before the supply pin, protecting the device from potential damage. Fail-Safe Logic minimizes system complexity by removing the need for power supply sequencing on the logic control pins. For example, the Fail-Safe Logic feature allows the select pin of the TMUX1119 to be ramped to 5.5 V while V_{DD} = 0 V. Additionally, the feature enables operation of the TMUX1119 with V_{DD} = 1.2 V while allowing the select pin to interface with a logic level of another device up to 5.5 V.

Copyright © 2018–2020, Texas Instruments Incorporated

Feature Description (continued)

8.3.5 Ultra-low Leakage Current

The TMUX1119 provides extremely low on-leakage and off-leakage currents. The TMUX1119 is capable of switching signals from high source-impedance inputs into a high input-impedance op amp with minimal offset error because of the ultra-low leakage currents. Figure 26 shows typical leakage currents of the TMUX1119 versus temperature.

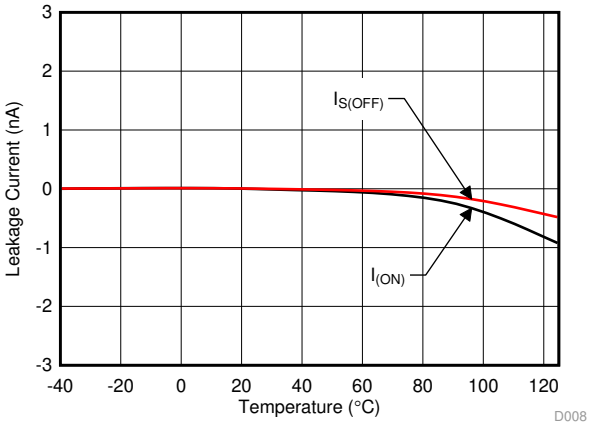

Figure 26. Leakage Current vs Temperature

8.3.6 Ultra-low Charge Injection

The TMUX1119 has a transmission gate topology, as shown in Figure 27. Any mismatch in the stray capacitance associated with the NMOS and PMOS causes an output level change whenever the switch is opened or closed.

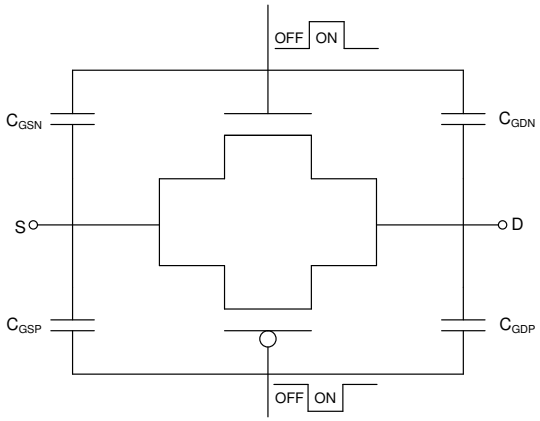

Figure 27. Transmission Gate Topology

Copyright © 2018–2020, Texas Instruments Incorporated

Feature Description (continued)

The TMUX1119 has special charge-injection cancellation circuitry that reduces the drain-to-source charge injection to -6 pC at V_D = 1 V as shown in Figure 28.

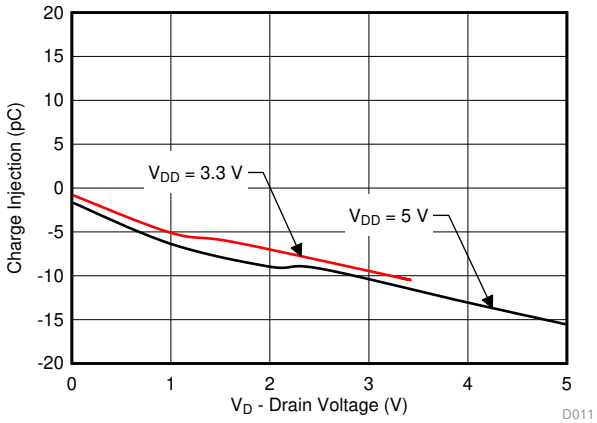

Figure 28. Charge Injection vs Drain Voltage

8.4 Device Functional Modes

The select (SEL) pin of the TMUX1119 controls which switch is connected to the drain of the device. When a given input is not selected, that source pin is in high impedance mode (HI-Z). The control pins can be as high as 5.5 V.

8.5 Truth Tables

Table 1. TMUX1119 Truth Table

CONTROL LOGIC (SEL)	Selected Source (Sx) Connected To Drain (D) Pin
0	S1
1	S2

Copyright © 2018–2020, Texas Instruments Incorporated

9 Application and Implementation

NOTE

Information in the following applications sections is not part of the TI component specification, and TI does not warrant its accuracy or completeness. TI's customers are responsible for determining suitability of components for their purposes. Customers should validate and test their design implementation to confirm system functionality.

9.1 Application Information

The TMUX11xx family offers ulta-low input and output leakage currents and low charge injection. These devices operate up to 5.5 V, and offer true rail-to-rail input and output of both analog and digital signals. The TMUX1119 has a low on-capacitance which allows faster settling time when multiplexing inputs in the time domain. These features make the TMUX11xx devices a family of precision, high-performance switches and multiplexers for low-voltage applications.

9.2 Typical Application

Figure 29 shows an ultrasonic gas meter front end. The ultrasonic front end design utilizes time of flight (TOF) measurement to determine the amount of gas flowing in a pipe. The circuit utilizes the MSP430FR5994, two ultra low power operational amplifiers, OPA835 and OPA836, along with two TMUX1119, 2:1 precision switches.

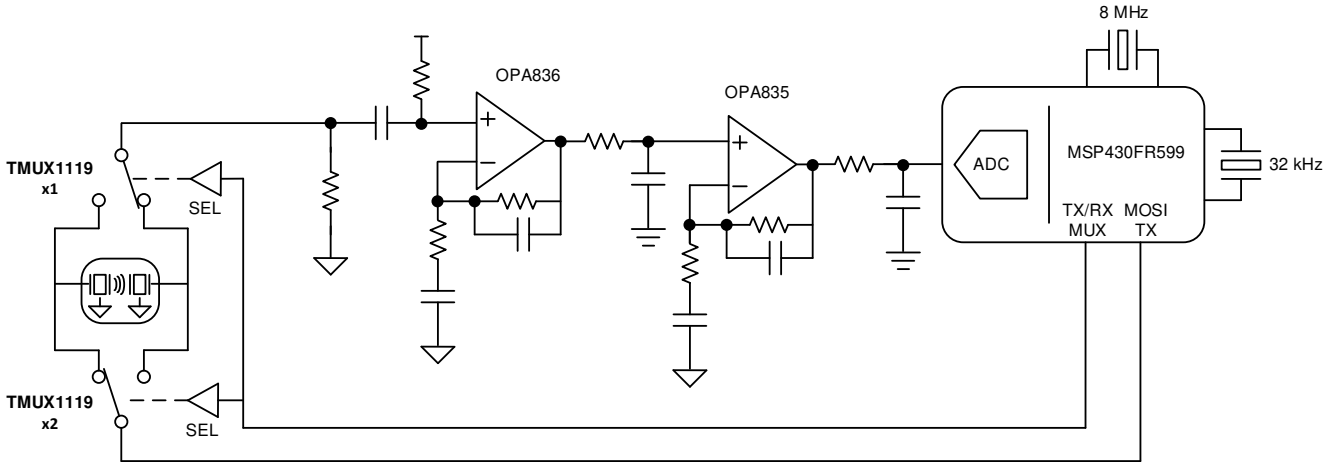

Figure 29. Ultrasonic Gas Meter System

9.3 Design Requirements

For this design example, use the parameters listed in Table 2.

Table 2. Design Parameters

PARAMETERS	VALUES
Supply (V_{DD})	5 V
I/O signal range	0 V to V_{DD} (Rail to Rail)
Control logic thresholds	1.8 V compatible
Single-shot standard deviation (STD)	<2 ns
Zero-flow drift (ZFD)	<1 ns

Copyright © 2018–2020, Texas Instruments Incorporated

9.4 Detailed Design Procedure

The TMUX1119 can be operated without any external components except for the supply decoupling capacitors. All inputs passing through the switch must fall within the recommend operating conditions of the TMUX1119, including signal range and continuous current. For this design with a supply of 5 V the signal range can be 0 V to 5 V, and the max continuous current can be 30 mA.

The TMUX1119 device is a bidirectional, single-pole double-throw (SPDT) switch that offers low on-resistance, low leakage, and low power. These features make this device suitable for portable and power sensitive applications such as ultrasonic gas metering systems. The two TMUX1119 devices are used to switch the transmission and reception signals from the MCU to the two transceivers in an efficient manner without distortion. Exceptional on-resistance flatness, leakage performance, and charge injection allows the TMUX1119 to be utilized in place of the TS5A9411 in *Ultrasonic Gas Meter Front-End With MSP430™ Reference Design*. For a more detailed analysis of the entire system refer to the *reference design*.

9.5 Application Curve

The TMUX1119 is capable of switching signals with minimal distortion because of the ultra-low leakage currents and excellent On-resistance flatness. Figure 30 shows how the on-resistance fo the TMUX1119 varies with different supply voltages.

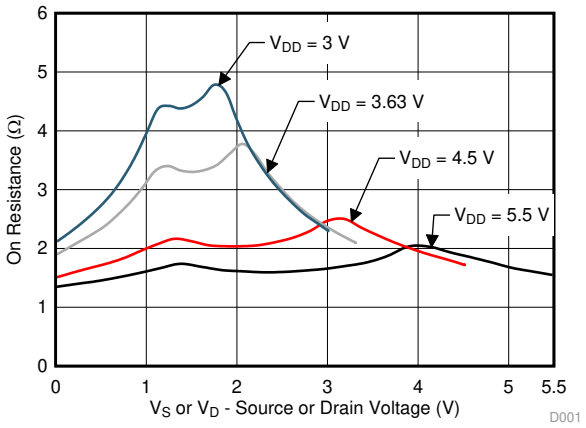

T_A = 25°C

Figure 30. On-Leakage vs Source or Drain Voltage

10 Power Supply Recommendations

The TMUX1119 operates across a wide supply range of 1.08 V to 5.5 V. Do not exceed the absolute maximum ratings because stresses beyond the listed ratings can cause permanent damage to the devices.

Power-supply bypassing improves noise margin and prevents switching noise propagation from the V_{DD} supply to other components. Good power-supply decoupling is important to achieve optimum performance. For improved supply noise immunity, use a supply decoupling capacitor ranging from 0.1 μF to 10 μF from V_{DD} to ground. Place the bypass capacitors as close to the power supply pins of the device as possible using low-impedance connections. TI recommends using multi-layer ceramic chip capacitors (MLCCs) that offer low equivalent series resistance (ESR) and inductance (ESL) characteristics for power-supply decoupling purposes. For very sensitive systems, or for systems in harsh noise environments, avoiding the use of vias for connecting the capacitors to the device pins may offer superior noise immunity. The use of multiple vias in parallel lowers the overall inductance and is beneficial for connections to ground planes.

Copyright © 2018–2020, Texas Instruments Incorporated

11 Layout

11.1 Layout Guidelines

11.1.1 Layout Information

When a PCB trace turns a corner at a 90° angle, a reflection can occur. A reflection occurs primarily because of the change of width of the trace. At the apex of the turn, the trace width increases to 1.414 times the width. This increase upsets the transmission-line characteristics, especially the distributed capacitance and self–inductance of the trace which results in the reflection. Not all PCB traces can be straight and therefore some traces must turn corners. Figure 31 shows progressively better techniques of rounding corners. Only the last example (BEST) maintains constant trace width and minimizes reflections.

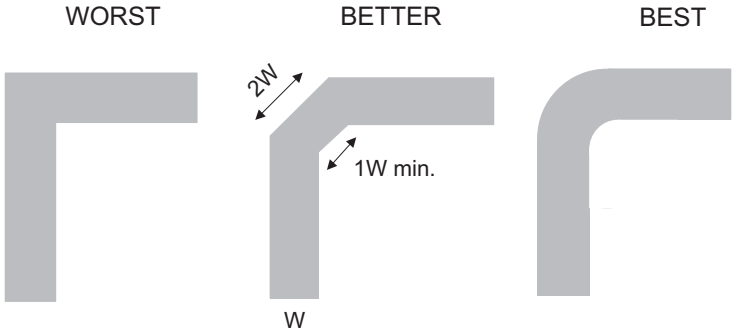

Figure 31. Trace Example

Route high-speed signals using a minimum of vias and corners which reduces signal reflections and impedance changes. When a via must be used, increase the clearance size around it to minimize its capacitance. Each via introduces discontinuities in the signal's transmission line and increases the chance of picking up interference from the other layers of the board. Be careful when designing test points, through-hole pins are not recommended at high frequencies.

Figure 32 illustrates an example of a PCB layout with the TMUX1119. Some key considerations are:

- Decouple the V_{DD} pin with a 0.1-µF capacitor, placed as close to the pin as possible. Make sure that the capacitor voltage rating is sufficient for the V_{DD} supply.
- Keep the input lines as short as possible.
- Use a solid ground plane to help reduce electromagnetic interference (EMI) noise pickup.
- Do not run sensitive analog traces in parallel with digital traces. Avoid crossing digital and analog traces if possible, and only make perpendicular crossings when necessary.

11.2 Layout Example

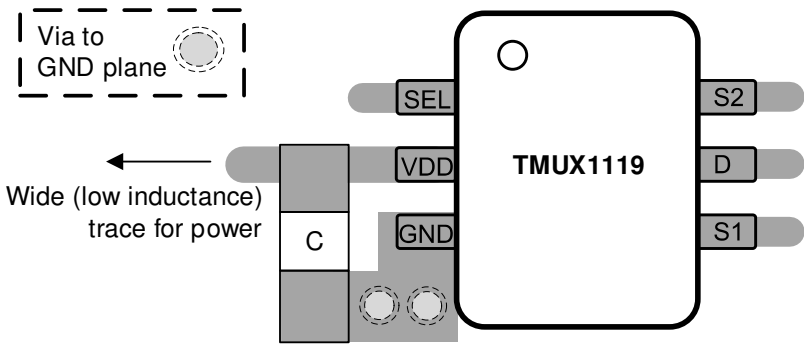

Figure 32. TMUX1119 Layout Example

Copyright © 2018–2020, Texas Instruments Incorporated

12 Device and Documentation Support

12.1 Documentation Support

12.1.1 Related Documentation

Texas Instruments, *Ultrasonic Gas Meter Front-End With MSP430™ Reference Design*.

Texas Instruments, *True Differential, 4 x 2 MUX, Analog Front End, Simultaneous-Sampling ADC Circuit*.

Texas Instruments, *Improve Stability Issues with Low CON Multiplexers*.

Texas Instruments, *Simplifying Design with 1.8 V logic Muxes and Switches*.

Texas Instruments, *Eliminate Power Sequencing with Powered-off Protection Signal Switches*.

Texas Instruments, *System-Level Protection for High-Voltage Analog Multiplexers*.

Texas Instruments, *QFN/SON PCB Attachment*.

Texas Instruments, *Quad Flatpack No-Lead Logic Packages*.

12.2 Related Links

The table below lists quick access links. Categories include technical documents, support and community resources, tools and software, and quick access to order now.

12.3 Receiving Notification of Documentation Updates

To receive notification of documentation updates, navigate to the device product folder on ti.com. In the upper right corner, click on *Alert me* to register and receive a weekly digest of any product information that has changed. For change details, review the revision history included in any revised document.

12.4 Community Resources

TI E2E™ support forums are an engineer's go-to source for fast, verified answers and design help — straight from the experts. Search existing answers or ask your own question to get the quick design help you need.

Linked content is provided "AS IS" by the respective contributors. They do not constitute TI specifications and do not necessarily reflect TI's views; see TI's Terms of Use.

12.5 Trademarks

E2E is a trademark of Texas Instruments.

12.6 Electrostatic Discharge Caution



This integrated circuit can be damaged by ESD. Texas Instruments recommends that all integrated circuits be handled with appropriate precautions. Failure to observe proper handling and installation procedures can cause damage.

ESD damage can range from subtle performance degradation to complete device failure. Precision integrated circuits may be more susceptible to damage because very small parametric changes could cause the device not to meet its published specifications.

12.7 Glossary

SLYZ022 — *TI Glossary*.

This glossary lists and explains terms, acronyms, and definitions.

13 Mechanical, Packaging, and Orderable Information

The following pages include mechanical, packaging, and orderable information. This information is the most current data available for the designated devices. This data is subject to change without notice and revision of this document. For browser-based versions of this data sheet, refer to the left-hand navigation.

Copyright © 2018–2020, Texas Instruments Incorporated

PACKAGING INFORMATION

Orderable Device	Status (1)	Package Type	Package Drawing	Pins	Package Qty	Eco Plan (2)	Lead/Ball Finish (6)	MSL Peak Temp (3)	Op Temp (°C)	Device Marking (4/5)	Samples
TMUX1119DBVR	ACTIVE	SOT-23	DBV	6	3000	Green (RoHS & no Sb/Br)	NIPDAU	Level-1-260C-UNLIM	-40 to 125	26HT	Samples
TMUX1119DCKR	ACTIVE	SC70	DCK	6	3000	Green (RoHS & no Sb/Br)	NIPDAU | NIPDAUAG	Level-1-260C-UNLIM	-40 to 125	1DF	Samples

(1) The marketing status values are defined as follows:
ACTIVE: Product device recommended for new designs.
LIFEBUY: TI has announced that the device will be discontinued, and a lifetime-buy period is in effect.
NRND: Not recommended for new designs. Device is in production to support existing customers, but TI does not recommend using this part in a new design.
PREVIEW: Device has been announced but is not in production. Samples may or may not be available.
OBSOLETE: TI has discontinued the production of the device.

(2) **RoHS:** TI defines "RoHS" to mean semiconductor products that are compliant with the current EU RoHS requirements for all 10 RoHS substances, including the requirement that RoHS substance do not exceed 0.1% by weight in homogeneous materials. Where designed to be soldered at high temperatures, "RoHS" products are suitable for use in specified lead-free processes. TI may reference these types of products as "Pb-Free".
RoHS Exempt: TI defines "RoHS Exempt" to mean products that contain lead but are compliant with EU RoHS pursuant to a specific EU RoHS exemption.
Green: TI defines "Green" to mean the content of Chlorine (Cl) and Bromine (Br) based flame retardants meet JS709B low halogen requirements of <=1000ppm threshold. Antimony trioxide based flame retardants must also meet the <=1000ppm threshold requirement.

(3) MSL, Peak Temp. - The Moisture Sensitivity Level rating according to the JEDEC industry standard classifications, and peak solder temperature.

(4) There may be additional marking, which relates to the logo, the lot trace code information, or the environmental category on the device.

(5) Multiple Device Markings will be inside parentheses. Only one Device Marking contained in parentheses and separated by a "~" will appear on a device. If a line is indented then it is a continuation of the previous line and the two combined represent the entire Device Marking for that device.

(6) Lead/Ball Finish - Orderable Devices may have multiple material finish options. Finish options are separated by a vertical ruled line. Lead/Ball Finish values may wrap to two lines if the finish value exceeds the maximum column width.

Important Information and Disclaimer: The information provided on this page represents TI's knowledge and belief as of the date that it is provided. TI bases its knowledge and belief on information provided by third parties, and makes no representation or warranty as to the accuracy of such information. Efforts are underway to better integrate information from third parties. TI has taken and continues to take reasonable steps to provide representative and accurate information but may not have conducted destructive testing or chemical analysis on incoming materials and chemicals. TI and TI suppliers consider certain information to be proprietary, and thus CAS numbers and other limited information may not be available for release.

In no event shall TI's liability arising out of such information exceed the total purchase price of the TI part(s) at issue in this document sold by TI to Customer on an annual basis.

TAPE AND REEL INFORMATION

REEL DIMENSIONS

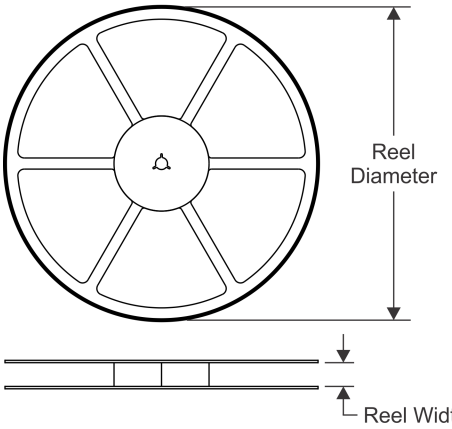

TAPE DIMENSIONS

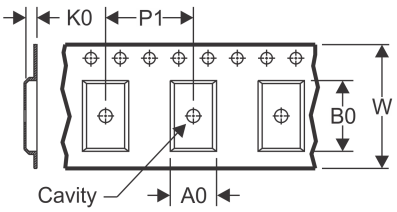

A0	Dimension designed to accommodate the component width
B0	Dimension designed to accommodate the component length
K0	Dimension designed to accommodate the component thickness
W	Overall width of the carrier tape
P1	Pitch between successive cavity centers

QUADRANT ASSIGNMENTS FOR PIN 1 ORIENTATION IN TAPE

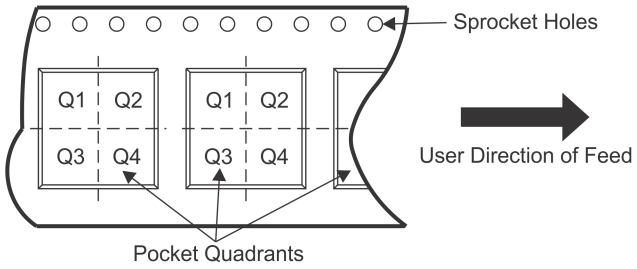

*All dimensions are nominal

Device	Package Type	Package Drawing	Pins	SPQ	Reel Diameter (mm)	Reel Width W1 (mm)	A0 (mm)	B0 (mm)	K0 (mm)	P1 (mm)	W (mm)	Pin1 Quadrant
TMUX1119DBVR	SOT-23	DBV	6	3000	178.0	9.0	2.4	2.5	1.2	4.0	8.0	Q3
TMUX1119DCKR	SC70	DCK	6	3000	178.0	9.0	2.4	2.5	1.2	4.0	8.0	Q3

TAPE AND REEL BOX DIMENSIONS

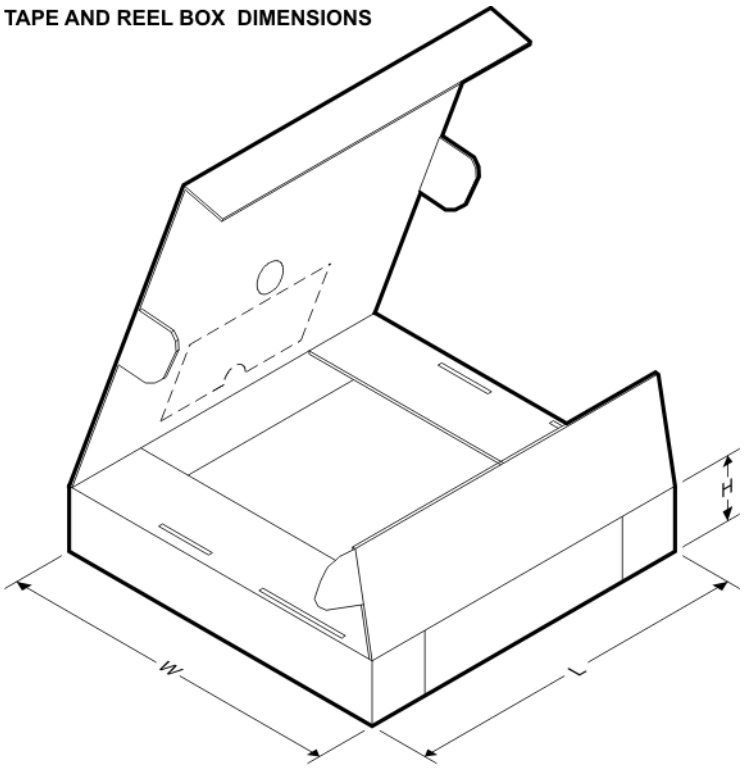

*All dimensions are nominal

Device	Package Type	Package Drawing	Pins	SPQ	Length (mm)	Width (mm)	Height (mm)
TMUX1119DBVR	SOT-23	DBV	6	3000	180.0	180.0	18.0
TMUX1119DCKR	SC70	DCK	6	3000	180.0	180.0	18.0

DCK (R–PDSO–G6) PLASTIC SMALL–OUTLINE PACKAGE

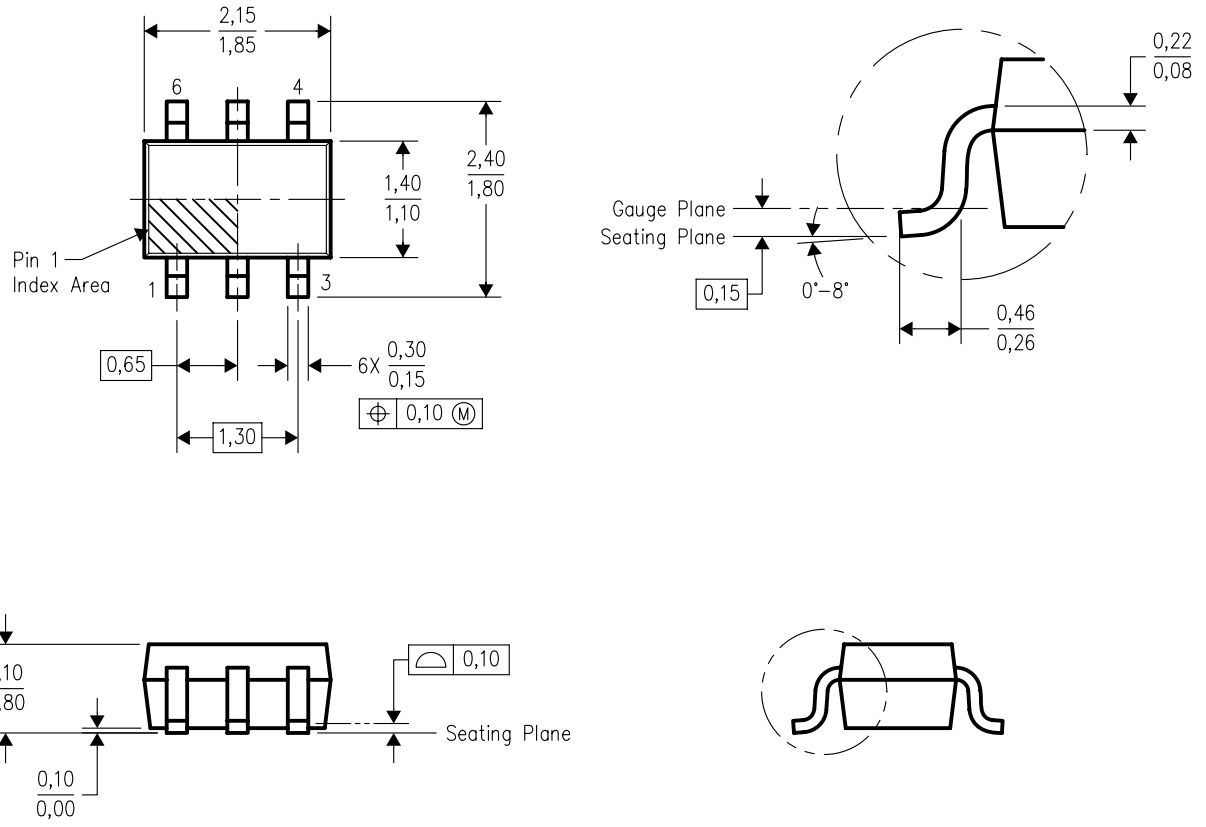

4093553–4/G 01/2007

NOTES:
A. All linear dimensions are in millimeters.
B. This drawing is subject to change without notice.
C. Body dimensions do not include mold flash or protrusion. Mold flash and protrusion shall not exceed 0.15 per side.
D. Falls within JEDEC MO–203 variation AB.

DCK (R–PDSO–G6) PLASTIC SMALL OUTLINE

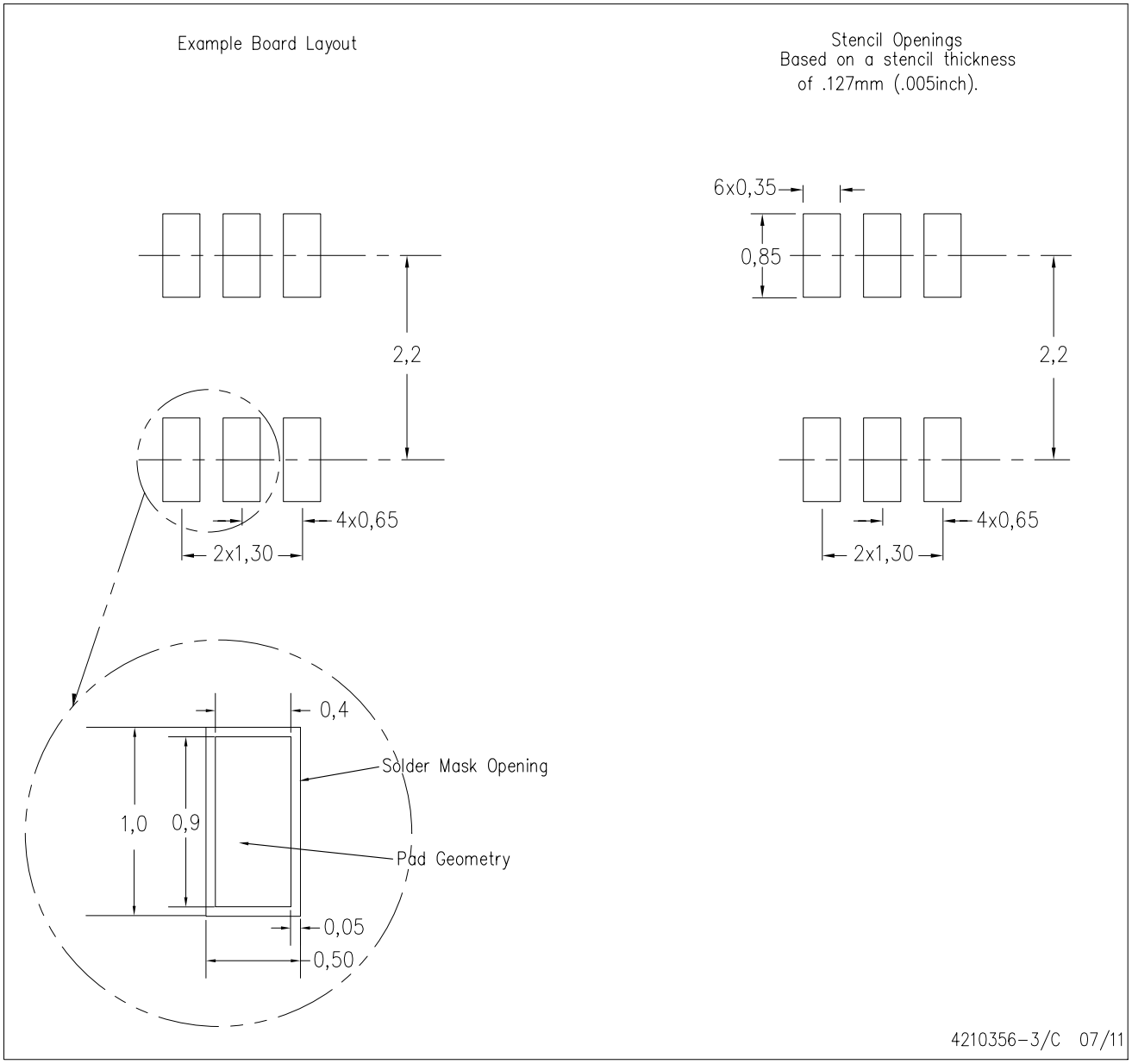

NOTES:
A. All linear dimensions are in millimeters.
B. This drawing is subject to change without notice.
C. Customers should place a note on the circuit board fabrication drawing not to alter the center solder mask defined pad.
D. Publication IPC–7351 is recommended for alternate designs.
E. Laser cutting apertures with trapezoidal walls and also rounding corners will offer better paste release. Customers should contact their board assembly site for stencil design recommendations. Example stencil design based on a 50% volumetric metal load solder paste. Refer to IPC–7525 for other stencil recommendations.

PACKAGE OUTLINE

DBV0006A

SOT-23 - 1.45 mm max height

SMALL OUTLINE TRANSISTOR

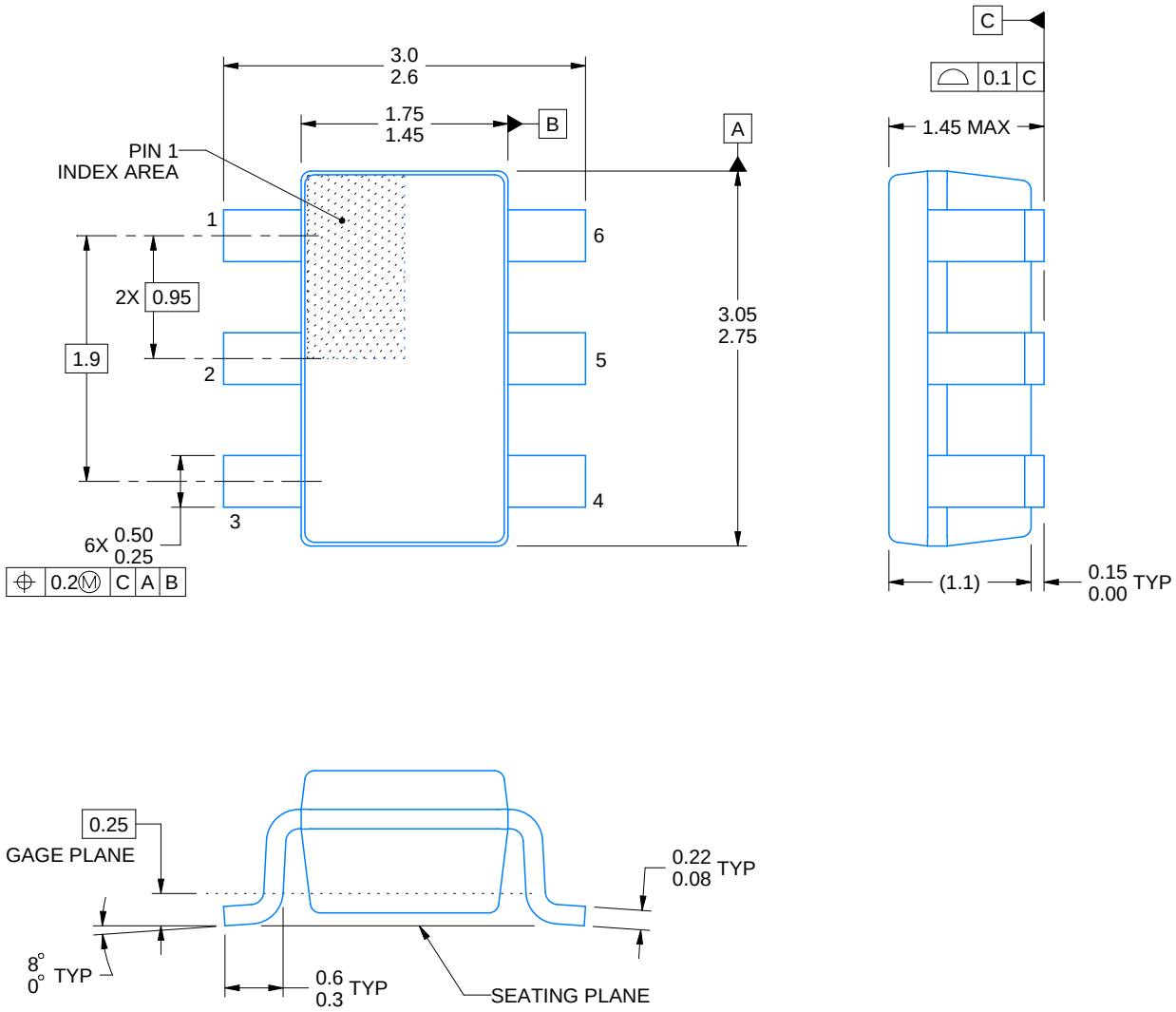

4214840/B 03/2018

NOTES:

1. All linear dimensions are in millimeters. Any dimensions in parenthesis are for reference only. Dimensioning and tolerancing per ASME Y14.5M.
2. This drawing is subject to change without notice.
3. Body dimensions do not include mold flash or protrusion. Mold flash and protrusion shall not exceed 0.15 per side.
4. Leads 1,2,3 may be wider than leads 4,5,6 for package orientation.
5. Refernce JEDEC MO-178.

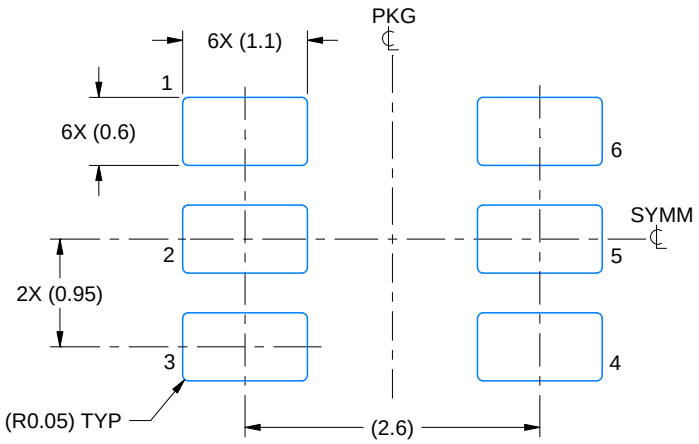

LAND PATTERN EXAMPLE
EXPOSED METAL SHOWN
SCALE:15X

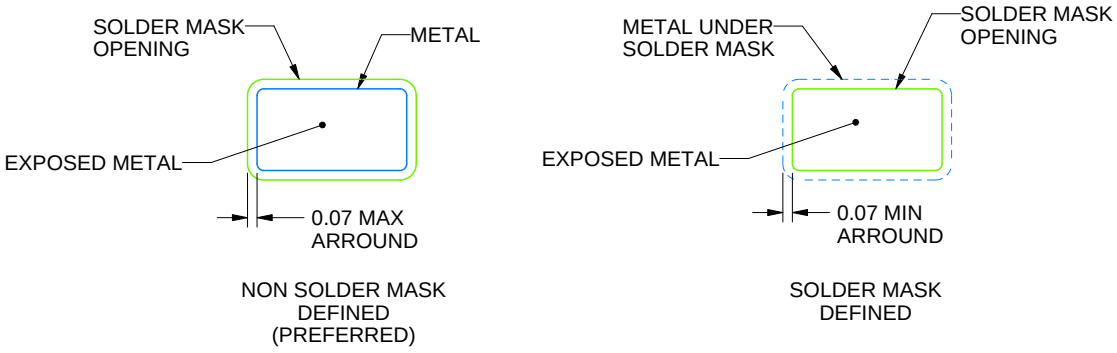

SOLDER MASK DETAILS

4214840/B 03/2018

NOTES: (continued)

6. Publication IPC-7351 may have alternate designs.
7. Solder mask tolerances between and around signal pads can vary based on board fabrication site.

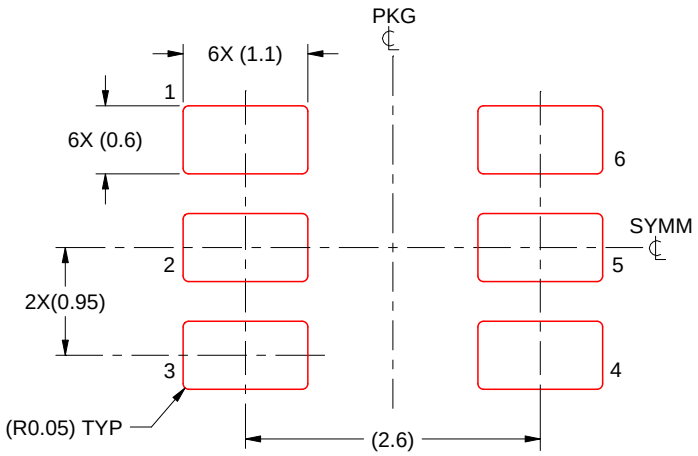

SOLDER PASTE EXAMPLE
BASED ON 0.125 mm THICK STENCIL
SCALE:15X

4214840/B 03/2018

NOTES: (continued)

8. Laser cutting apertures with trapezoidal walls and rounded corners may offer better paste release. IPC-7525 may have alternate design recommendations.
9. Board assembly site may have different recommendations for stencil design.

IMPORTANT NOTICE AND DISCLAIMER

TI PROVIDES TECHNICAL AND RELIABILITY DATA (INCLUDING DATASHEETS), DESIGN RESOURCES (INCLUDING REFERENCE DESIGNS), APPLICATION OR OTHER DESIGN ADVICE, WEB TOOLS, SAFETY INFORMATION, AND OTHER RESOURCES “AS IS” AND WITH ALL FAULTS, AND DISCLAIMS ALL WARRANTIES, EXPRESS AND IMPLIED, INCLUDING WITHOUT LIMITATION ANY IMPLIED WARRANTIES OF MERCHANTABILITY, FITNESS FOR A PARTICULAR PURPOSE OR NON-INFRINGEMENT OF THIRD PARTY INTELLECTUAL PROPERTY RIGHTS.

These resources are intended for skilled developers designing with TI products. You are solely responsible for (1) selecting the appropriate TI products for your application, (2) designing, validating and testing your application, and (3) ensuring your application meets applicable standards, and any other safety, security, or other requirements. These resources are subject to change without notice. TI grants you permission to use these resources only for development of an application that uses the TI products described in the resource. Other reproduction and display of these resources is prohibited. No license is granted to any other TI intellectual property right or to any third party intellectual property right. TI disclaims responsibility for, and you will fully indemnify TI and its representatives against, any claims, damages, costs, losses, and liabilities arising out of your use of these resources.

TI’s products are provided subject to TI’s Terms of Sale (www.ti.com/legal/termsofsale.html) or other applicable terms available either on ti.com or provided in conjunction with such TI products. TI’s provision of these resources does not expand or otherwise alter TI’s applicable warranties or warranty disclaimers for TI products.

Mailing Address: Texas Instruments, Post Office Box 655303, Dallas, Texas 75265
Copyright © 2020, Texas Instruments Incorporated