**********

C-MOS 8-BIT MICROPROCESSOR

-TOP VIEW-

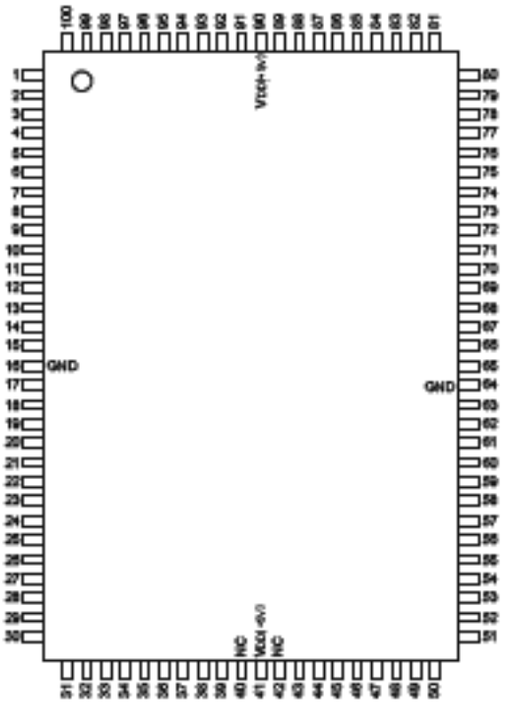


(VDD = +5V)

| NO. | I/O | SIGNAL | NO. | I/O | SIGNAL | NO. | I/O | SIGNAL | NO. | I/O | SIGNAL |
|---|---|---|---|---|---|---|---|---|---|---|---|
| 1 | O | A5 | 26 | I/O | PA3 | 51 | I/O | SYNCB | 76 | O | ZC/TO2 |
| 2 | O | A4 | 27 | I/O | PA2 | 52 | O | WAIT/RDYB | 77 | O | ZC/TO3 |
| 3 | O | A3 | 28 | I/O | PA1 | 53 | I/O | PB0 | 78 | I | CLK/TRG3 |
| 4 | O | A2 | 29 | I/O | PA0 | 54 | I/O | PB1 | 79 | I | CLK/TRG2 |
| 5 | O | A1 | 30 | O | WAIT/RDYA | 55 | I/O | PB2 | 80 | I | CLK/TRG1 |
| 6 | O | A0 | 31 | I/O | SYNCA | 56 | I/O | PB3 | 81 | I | CLK/TRG0 |
| 7 | O | RFSH | 32 | I | RXDA | 57 | I/O | PB4 | 82 | I/O | D7 |
| 8 | O | M1 | 33 | I | RXCA | 58 | I/O | PB5 | 83 | I/O | D6 |
| 9 | I | REST | 34 | I | TXCA | 59 | I/O | PB6 | 84 | I/O | D5 |
| 10 | I | BUSREQ | 35 | O | TXDA | 60 | I/O | PB7 | 85 | I/O | D4 |
| 11 | I | WAIT | 36 | O | DTRA | 61 | I | RSTB | 86 | I/O | D3 |
| 12 | O | BUSACK | 37 | O | RTSA | 62 | O | BRDY | 87 | I/O | D2 |
| 13 | O | WR | 38 | I | CTSA | 63 | I | RSET | 88 | I/O | D1 |
| 14 | O | RD | 39 | I | DCDA | 64 | — | GND | 89 | I/O | D0 |
| 15 | O | IORQ | 40 | — | NC | 65 | I | XTAL1 | 90 | — | VDD |
| 16 | — | GND | 41 | — | VDD | 66 | O | XTAL2 | 91 | O | A15 |
| 17 | O | MREQ | 42 | — | NC | 67 | I | IEI | 92 | O | A14 |
| 18 | O | HALT | 43 | I | DCDB | 68 | O | CLKOUT | 93 | O | A13 |
| 19 | I | INT | 44 | I | CTSB | 69 | I | CLKIN | 94 | O | A12 |
| 20 | O | ARDY | 45 | O | RTSB | 70 | O | A7RF | 95 | O | A11 |
| 21 | I | ASYB | 46 | O | DTRB | 71 | O | IEO | 96 | O | A10 |
| 22 | I/O | PA7 | 47 | O | TXDB | 72 | I | IEI | 97 | O | A9 |
| 23 | I/O | PA6 | 48 | I | TXCB | 73 | O | WAIT/OUT | 98 | O | A8 |
| 24 | I/O | PA5 | 49 | I | RXCB | 74 | O | ZC/TO0 | 99 | O | A7 |
| 25 | I/O | PA4 | 50 | I | RXDB | 75 | O | ZC/TO1 | 100 | O | A6 |

TMPZ84C015AF (2/3)

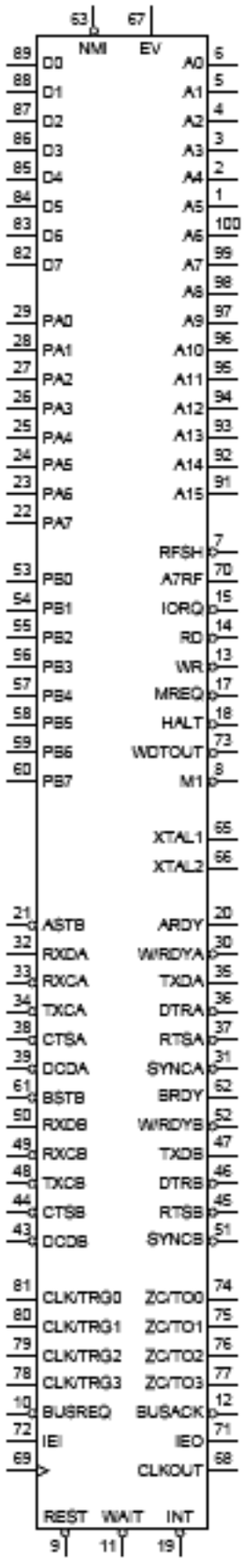

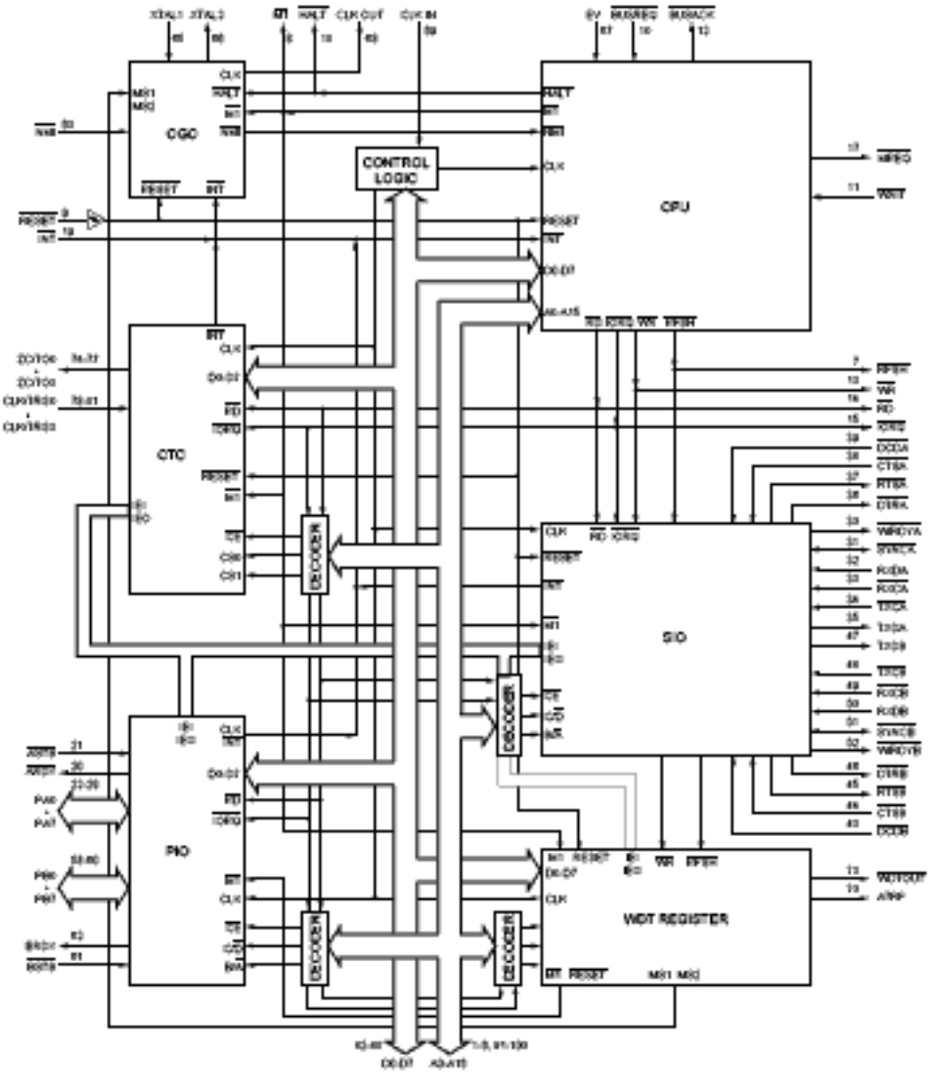


| | | | |
|---|---|---|---|
| A0 - A15 | : 3-STATE ADDRESS BUS OUTPUTS | WR | : 3-STATE WRITE OUTPUT |
| BUSACK | : BUS ACKNOWLEDGE OUTPUT | ZC/TO0-3 | : ZERO COUNT/TIME OUT 0-3 OUTPUT |
| BUSREQ | : BUS REQUEST INPUT | ASTB | : PORT A STROBE PULSE INPUT |
| CLK/TRG0 - 3 | : EXTERNAL CLOCK/TIMER TRIGGER 0-3 INPUTS | ARDY | : REGISTER A READY OUTPUT |
| D0 - D7 | : 3-STATE DATA BUS INPUT/OUTPUTS | BSTB | : PORT B STROBE PULSE INPUT |
| EV | : EVALUATER INPUT | BRDY | : REGISTER B READY OUTPUT |
| HALT | : HALT OUTPUT | SYNCA, SYNCB | : SYNC INPUT/OUTPUT |
| IEI/IEO | : CTC INTERRUPT ENABLE INPUT/OUTPUT | WAIT/RDYA, WAIT/RDYB | : WAIT/READY OUTPUT |
| INT | : MASKABLE INTERRUPT REQUEST/INPUT | RXDA, RXDB | : SERIAL DATA INPUT |
| IORQ | : 3-STATE IO REQUEST OUTPUT | RXCA, RXCB | : RECEIVE CLOCK INPUT |
| M1 | : 3-STATE MACHINE CYCLE 1 OUTPUT | TXCA, TXCB | : TRANSMISSION CLOCK INPUT |
| MREQ | : 3-STATE MEMORY REQUEST OUTPUT | TXDA, TXDB | : SERIAL DATA OUTPUT |
| NMI | : NON-MASKABLE INTERRUPT REQUEST INPUT | DTRA, DTRB | : DATA TERMINAL READY OUTPUT |
| PA0 - PA7, PB0 - PB7 | : 3-STATE I/O PORT | RTSA, RTSB | : TRANSMISSION REQUEST OUTPUT |
| RD | : 3-STATE READ OUTPUT | CTSA, CTSB | : TRANSMISSION ENABLE INPUT |
| RESET | : RESET INPUT | DCDA, DCDB | : DATA CARRIER DETECT OUTPUT |
| RFSH | : REFRESH OUTPUT | WDTOUT | : WATCH DOG TIMER OUTPUT |
| WAIT | : WAIT REQUEST INPUT | | |