TRUMPower

TMPC-400H

"Haswell Ready" Medical Grade 400W ATX Power Supply

FEATURES

- Meets ATX12V Standard
- Intel's Haswell Compatible
- BF Rated Outputs
- 80PLUS Gold High Efficiency
- 5,000 Meters Operating Altitude
- IEC/EN 60601-1 3rd & ANSI/AAMI ES 60601-1 Approvals



INPUT SPECIFICATIONS

Input Voltage Range	90~264 VAC
Input Frequency	47~63 Hz
Input Current	8A rms max. @ 100 VAC, 60 Hz 4A rms max. @ 230 VAC, 50 Hz
Inrush Current	50A @ 115 VAC, 100A @ 230 VAC, at 25°C cold start
Earth Leakage Current	150µA typical @ 264 VAC, 63 Hz

OUTPUT SPECIFICATIONS

Output Power Ratings	See rating chart
Load Regulation	See rating chart
Line Regulation	±1% max. @ full load
Ripple & Noise*	See rating chart
Rise Time	20ms max.10-90% of the rated output @ full load, 115/230V
Hold-up Time	12ms @ 115 VAC, 60 Hz, 17ms @ 230 VAC, 50 Hz
Overvoltage Protection	+3.3V/+5V/+12V; Latch off
Overcurrent Protection	+3.3V/+5V/+12V; Latch off
Short-Circuit Protection	+3.3V/+5V/+12V/-12V; Latch off
Over-Temperature Protection	Latch off
Temperature Coefficient	±0.04%/°C max.

* Measured with 20MHz bandwidth at rated line voltage and output load ranges, with a 10µF electrolytic capacitor in parallel with a 0.1µF ceramic disk capacitor across the output connector.

OUTPUT VOLTAGE & CURRENT RATING CHART

DC Ouptut Voltage	Minimum Load	*Maximum Load	Load Regulation	Ripple & Noise VP-P Max.
+3.3V	0.1A	21A	±5%	50mV
+5V	0.1A	18A	±5%	50mV
+12V1	0.05A	18A	±5%	120mV
+12V2	0.1A	18A	±5%	120mV
-5V	0A	0.2A	±5%	50mV
-12V	0A	0.5A	±5%	120mV
+5Vsb	0A	3A	±5%	50mV

* The overall output power is 400W maximum.
* The total output power for +3.3V & +5V is 120W maximum.
* The total output current for +12V1 and +12V2 is 29A maximum .

GENERAL SPECIFICATIONS

Efficiency	80PLUS Gold; 87%, 90%, 87%
Power Factor	0.98 typical @ 264 VAC
Switching Frequency	65-75 KHz
Operating Temperature	0°C to +50°C
Derating	Derate from 100% at +50°C linearly to 50% at +70°C
Storage Temperature	-20°C to +80°C
Relative Humidity	10% to 95% non-condensing
Cooling Fan	Ball-bearing type with noise killer; thermally controlled
Operating Altitude	5,000 meters max.
Withstand Voltage	4,000 VAC, input-output (2 MOPP) 1,500 VAC, input-ground (1 MOPP) 1,500 VAC, output-ground
MTBF	260K hours at 230 VAC, full load and 25°C ambient, calculated per MIL-HDBK-217F

STANDARDS & COMPLIANCES

EN/IEC 60601-1-2	EMC & Immunity Performance
EN 55022, FCC, CISPR 22	Class B, conducted & radiated
EN 61000-3-2	Harmonic distortion, Class B & D
EN 61000-3-3	Line flicker
EN 61000-4-2	ESD, ±8 KV air and ±6 KV contact
EN 61000-4-3	Radiated immunity, 3V/m
EN 61000-4-4	Fast transient/burst, ±2 KV
EN 61000-4-5	Surge, ±1 KV diff., ±2 KV com.
EN 61000-4-6	Conducted immunity, 3 Vrms
EN 61000-4-8	Magnetic field immunity, 3A/m
EN 61000-4-11	Voltage dips, 30% reduction for 500ms, 60% reduction for 100ms, >95% reduction for 10ms
Safety Standards	IEC/EN 60601-1 3rd Edition, ANSI/AAMI ES 60601-1:2005, CSA C22.2 No. 60601-1:08
Agency Approvals	UL, cUL, TUV, CB, CE
Other Compliance	RoHS

Tumbler Technologies + TRUMPower

3350 Scott Blvd., Building 13 • Santa Clara, California 95054, USA • 408-988-6616 • sales@trumpower.com • www.TRUMPower.com

TMPC-400H

"Haswell Ready" Medical Grade 400W ATX Power Supply

MECHANICAL SPECIFICATIONS

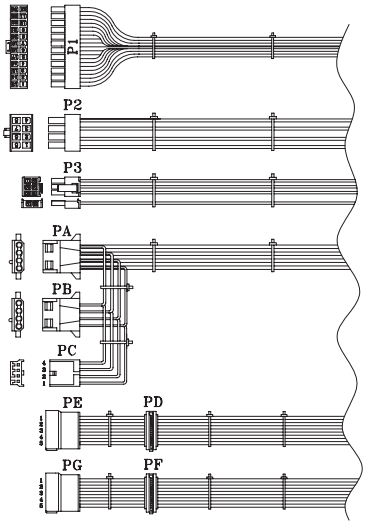

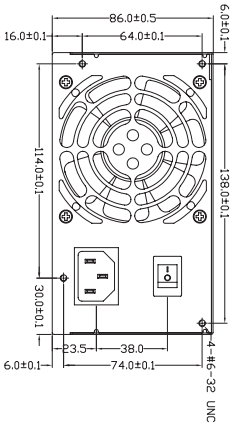

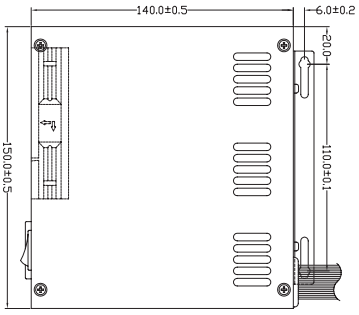

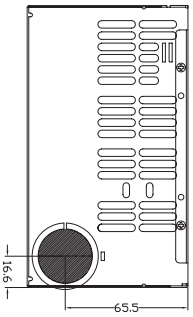

Unit: mm
Tolerance: 0.5mm max.
Weight: 1.8kg (3.97 lb) approx.

Note: Custom output cable set available.

Tumbler Technologies + TRUMPower

3350 Scott Blvd., Building 13 • Santa Clara, California 95054, USA • 408-988-6616 • sales@trumpower.com • www.TRUMPower.com