TRACO POWER

AC/DC Power Modules

TMF Series, 5 – 30 W

- **Fully encapsulated power supplies in plasic casing for PCB mount**
- **Certification according to IEC/EN/ES 60601-1 3rd edition for 2×MOPP**
- **Risk management process according to ISO 14971 including risk management file**
- **Acceptance criteria for electronic as semblies according to IPC-A-610 Level 3**
- **Low leakage current <100 µA rated for BF applications**
- **Operating temperature range: –25°C to +70°C max.**
- **Protection against short-circuit, over load and over voltage**
- **Protection class II prepared**
- **5 year product waranty**



The TMF Series AC/DC power supply modules are designed and manufactured based on workmanship standards and risk management to comply with the requirements for quality, reliability and safety of medical equipment. The units are approved to IEC/EN/ES 60601-1 edition 3.1 for 2 × MOPP (Means Of Patient Protection) and come along with an ISO 14971 risk management file.

These fully encapsulated modules are for PCB mount. They are designed for protection class II applications (no earth connection) and feature a low leakage current (<100 µA). A compact design and excellent EMC considerations facilitate the design in. The thermal management enables an operation within a wide temperature range of -25 to +70°C and the isolation system is designed and approved for an altitude of 5000 m (AMSL). This makes the power supplies suitable not only for stationary applications but also for transportable medical equipment.

Models

Order Code	Output Power (max.)	Output Voltage	Output Current (max.)	Efficiency (typ.)
TMF 05105	**5 W**	5.0 VDC	1000 mA	77 %
TMF 05112	**5 W**	12 VDC	417 mA	82 %
TMF 05115	**5 W**	15 VDC	333 mA	82 %
TMF 05124	**5 W**	24 VDC	208 mA	82 %
TMF 10105	**10 W**	5.0 VDC	2000 mA	79 %
TMF 10112	**10 W**	12 VDC	833 mA	84 %
TMF 10115	**10 W**	15 VDC	666 mA	84 %
TMF 10124	**10 W**	24 VDC	417 mA	84 %
TMF 20105	**18 W**	5.0 VDC	3600 mA	78 %
TMF 20112	**20 W**	12 VDC	1667 mA	84 %
TMF 20115	**20 W**	15 VDC	1333 mA	84 %
TMF 20124	**20 W**	24 VDC	833 mA	84 %
TMF 30105	**25 W**	5.0 VDC	5000 mA	82 %
TMF 30112	**30 W**	12 VDC	2500 mA	88 %
TMF 30115	**30 W**	15 VDC	2000 mA	86 %
TMF 30124	**30 W**	24 VDC	1250 mA	85 %

Input Specifications

Input voltage	– AC Input		90 – 264 VAC derating of 2%/V below 100 VAC required
	– DC Input		120 – 370 VDC
Input frequency			47 – 63 Hz
Leakage current (touch current)			< 0.1 mA (at 264 VAC)
Inrush current		5 W models: 10 W models: 20 W models: 30 W models:	10/20 A max. (115/230 VAC) 12/25 A max. (115/230 VAC) 20/40 A max. (115/230 VAC) 30/60 A max. (115/230 VAC)
No-load power consumption			< 0.15 W

Output Specifications

Voltage accuracy			± 2 % typ.
Regulation	– Input variation – Load variation (0–100 %)		0.5 % typ. 1.0 % typ.
Minimum load			not required
Hold-up time		5 W models: 10 W models: 20 W models: 30 W models:	20/90 ms min. (115/230 VAC) 12/70 ms min. (115/230 VAC) 10/36 ms min. (115/230 VAC) 14/45 ms min. (115/230 VAC)
Ripple and Noise (20MHz bandwidth)		5 VDC models: other models:	100 mVp-p max. 1 % of Vout max.
Overload protection (current limit)			hiccup, auto recovery
Short circuit current			hiccup, indefinite
Output overvoltage protection			zener diode

Max. capacitive load [µF]	Model series			
Output	TMF 05	TMF 10	TMF 20	TMF 30
5.0 VDC	8000	13‘000	5000	6800
12 VDC	1200	2600	1500	1600
15 VDC	820	2600	1000	1200
24 VDC	330	600	560	470

General Specifications

Temperature ranges	– operational (natural convection 20 LFM) – Storage temperature		–25 °C to +70 °C max. –40 °C to +85 °C max.
Power derating		5 & 10 Watt models: 20 & 30 Watt models:	derating above +55°C : 4 %/K derating above +50°C : 3 %/K
Temperature coefficient			0.05 %/K
Cooling			convection cooling, no internal fan
Humidity (non condensing)			95 % rel. H max.
Atmospheric pressure			54 kPa – 106 kPa
Altitude during operation			5000 m max.
Switching frequency (at 230 VAC)		5 & 10 W models: 20 & 30 W models:	40 kHz - 140 kHz 40 kHz - 73 kHz
Isolation			4000 VAC
MTBF (MIL-HDBK-217F, at 25 °C ground benign)		5 W models: 10 W models: 20 W models: 30 W models:	> 450‘000 h > 400‘000 h > 350‘000 h > 300‘000 h

All specifications valid at nominal input voltage, full load and +25°C after warm-up time unless otherwise stated.

General Specifications (continued)

Protection class	class II prepared		
Safety standards	IEC 60601-1:2005 (3rd Ed.)+ A1:2012, ANSI/AAMI ES60601-1:2005/(R)2012, CSA CAN/CSA-C22.2 NO. 60601-1:14 EN 60601-1:2006 + A1:2013 + A12:2014		
– Certification documents	www.tracopower.com/overview/tmf		
Electromagnetic compatibility (EMC), Emissions			
– Conducted & Radiated input surpression	EN 55011 limits to IEC 60601-1-2 4th editon		
Electromagnetic compatibility (EMC), Immunity			
– Electrostatic discharge (ESD)	IEC/EN 61000-4-2	4 kV / 8 kV	criteria A
– Radiated RF field immunity	IEC/EN 61000-4-3	10 V/m	criteria A
– Electrical fast transient / burst immunity	IEC/EN 61000-4-4	2 kV	criteria A
– Surge immunity*	IEC/EN 61000-4-5	1 kV	criteria A
– Immunity to conducted RF disturbances	IEC/EN 61000-4-6	10 V	criteria A
– Magnetic field immunity	IEC/EN 61000-4-8	30 A/m	criteria A
– Mains voltage dips and interruptions	IEC/EN 61000-4-11		
	30% / 10ms		criteria B
	95% / 5000ms		criteria B
Case material	plastic (UL94V-0 rated)		
Environmental compliance – Reach	www.tracopower.com/overview/tmf		
– RoHS	RoHS directive 2011/65/EU		

* For the 5 & 10 W models an external Varistor has to be integreated in the circuit at the converter input (in parallel).
Varistor recommendation: 14S471K

Outline Dimensions

TMF 05 xxx:

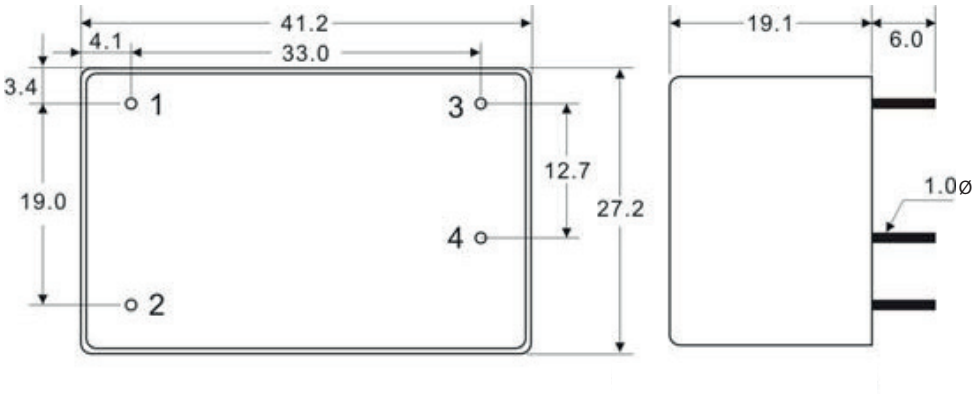

Pinout	
Pin	**Single**
1	AC (L)
2	AC (N)
3	–Vout
4	+Vout

Weight: 30 g (1.06 oz)

TMF 10 xxx:

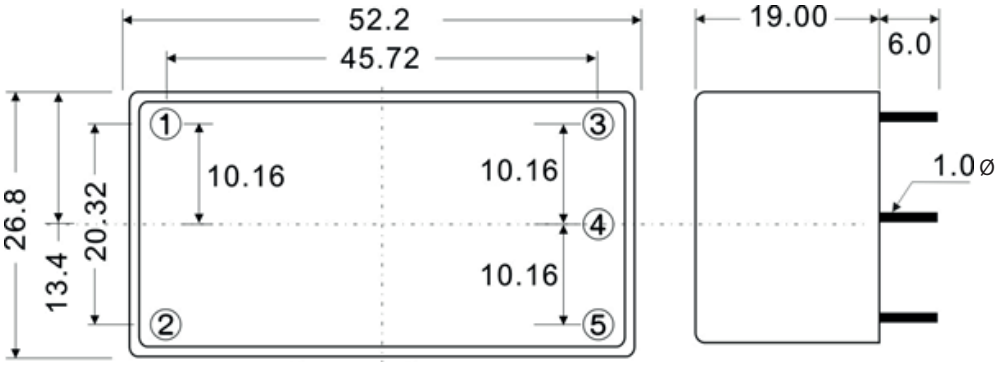

Pinout	
Pin	**Single**
1	AC (N)
2	AC (L)
3	+Vout
4	–Vout
5	No Pin

Weight: 47 g (1.66 oz)

Dimensions in [mm]
Tolerances: ±0.5 mm
Pin tolerances: ±0.1 mm

Outline Dimensions (continued)

TMF 20 xxx:

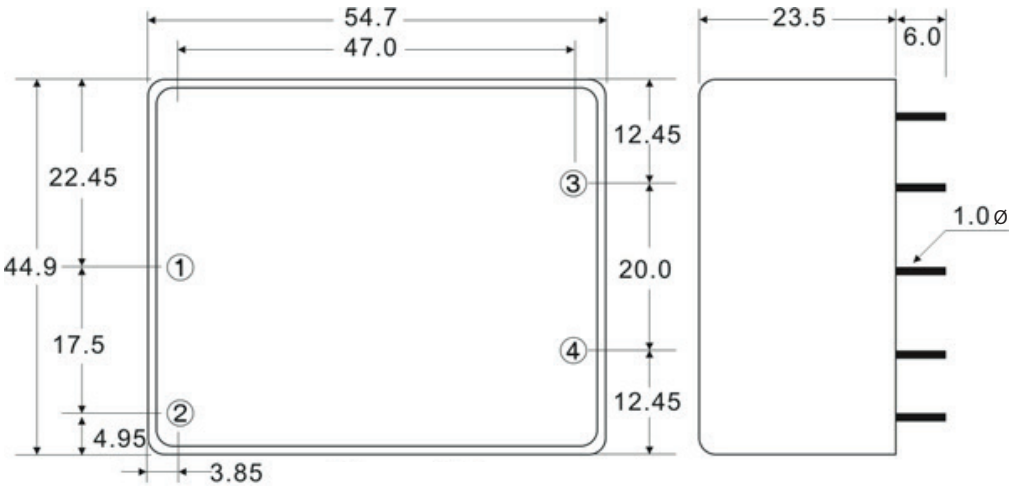

Pinout	
Pin	**Single**
1	AC (N)
2	AC (L)
3	–Vout
4	+Vout

Weight: 100 g (3.53 oz)

TMF 30 xxx:

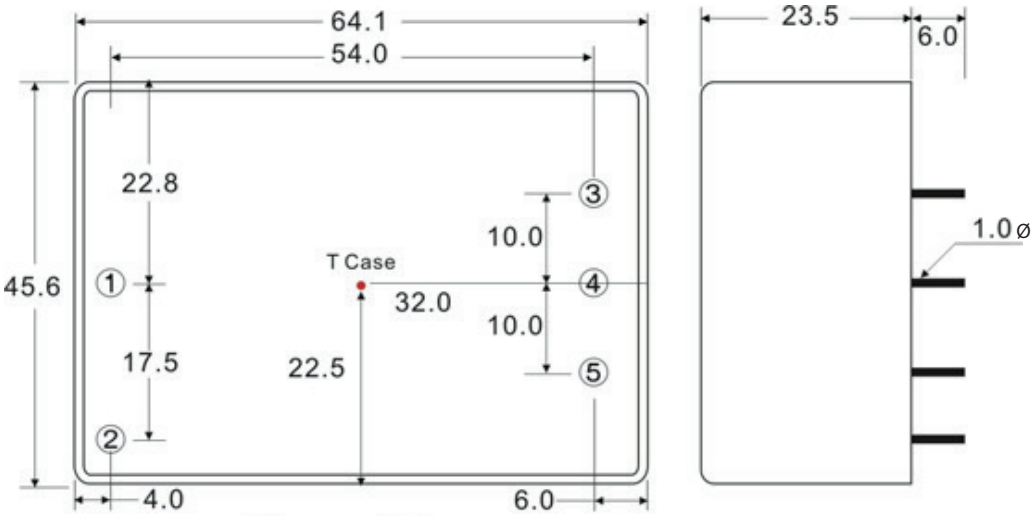

Pinout	
Pin	**Single**
1	AC (N)
2	AC (L)
3	–Vout
4	No Pin
5	+Vout

Weight: 135 g (4.76 oz)

Dimensions in [mm]
Tolerances: ±0.5 mm
Pin tolerances: ±0.1 mm

© Copyright 2017 Traco Electronic AG