TMCM-1043 STEP/DIR DRIVER BOARD

Cost-effective 1-axis Step/Dir stepper motor driver board for 2-phase bipolar stepper motors



Main Characteristics

2-phase stepper motor driver board
Step/Dir Interface
On-board Processor for initialization and diagnostic
Fixed Drive Capability 1.1A RMS (1.6A peak current) *or*
Program. Drive Capability up to 1.4A RMS (2A peak)
Voltage Range 12... 24V DC nominal (9... 28V max.)
Microstep Resolution 16 microsteps per full step input
Step Multiplier 256 microsteps per full step output with *16 step multiplier
Error Output overtemperature
spreadCycle™ high-precision chopper
Compact Size 37 x 37 x 8.2mm
Temperature Range -30... 50°C
Mounting 4 holes for M3 screws for NEMA 17 motors

Interface and Power Connector		
Pin	**Label**	**Description**
1	GND	System and module ground
2	+24V	Power supply +24V DC nominal
3	OUT_2	Output 2
4	OUT_1	Error output (overtemperature)
5	COM	Supply for optocoupler inputs
6	ENABLE	Enable signal input
7	DIR	Direction signal
8	STEP	Step signal input

Motor Connector		
Pin	**Label**	**Description**
1	A1	Motor coil A
2	A2	Motor coil A
3	A3	Motor coil B
4	A4	Motor coil B

Order Code	
TMCM-1043	S/D stepper driver board

Description

The TMCM-1043 is a simple and compact 1-axis driver board. It allows motor control via step and direction signals and can be directly controlled via a PLC or by an external Step/Dir controller board. Handling is quite easy and no further configuration is required. Nominal supply voltages are 12V DC and 24V DC. The drive capability is fixed at 1.1A RMS. The module provides a very high microstep resolution and TRINMICs spreadCycle chopper for smooth motor movement. The TMCM-1043 is equipped with an error output and an additional output. The board fits directly on the back of a NEMA17 stepper motor.
Using the *TMCM-1043 USB serial programmer kit*, the TMCM-1043 can be configured for up to 1.4A RMS current resp. 2A peak. Further, standby current can be used.

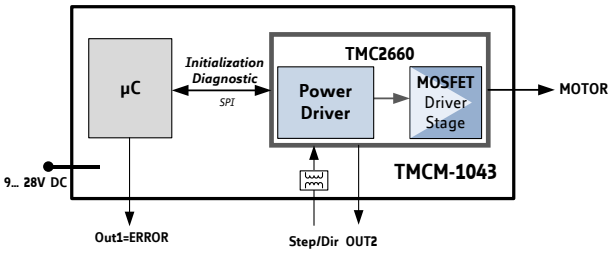

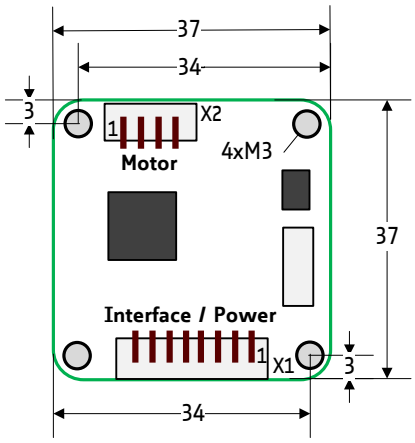

Motor Connector

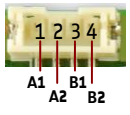

Plug type: JST B4B-PH-SM4-TB
Mating plug: JST PHR-4

Interface and Power Connector

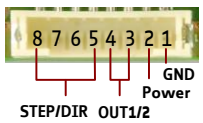

Plug type: JST B8B-PH-SM4-TB
Mating plug: JST PHR-8

TRINAMIC Motion Control GmbH & Co. KG
Hamburg, Germany

TRINAMIC
MOTION CONTROL

Examples: Step/Dir Circuits

Example 1: COM = +24V

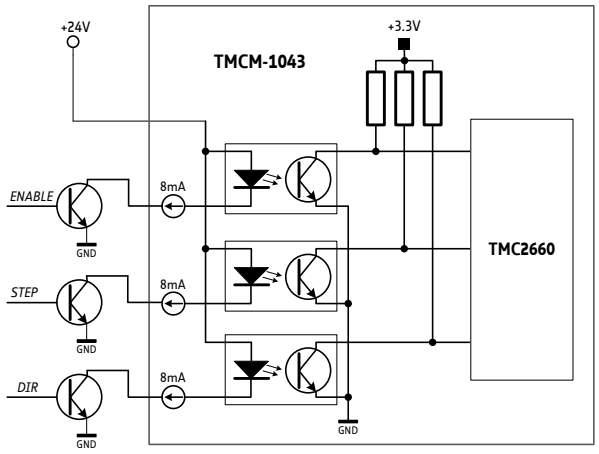

Example 1: COM = +5V

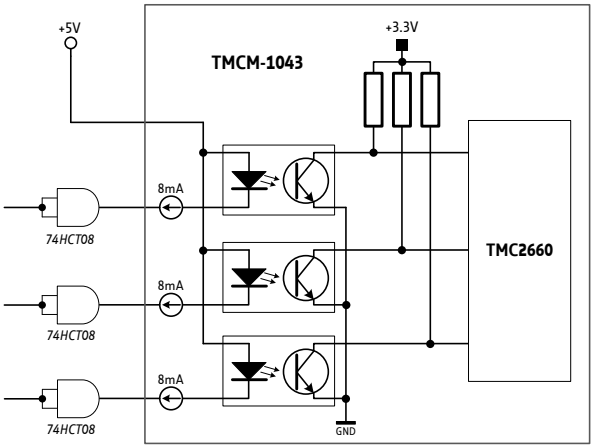

Note: TRINAMIC offers the TMCM-1043 USB serial programmer kit which can be used to configure the TMCM-1043 for up to 1.4A RMS. One kit includes a power supply unit, the programmer, cables, and three TMCM-1043 modules.

Caution!

Add external power supply capacitors!

It is recommended to connect an electrolytic capacitor of significant size to the power supply lines next to the TMCM-1043.

Rule of thumb for size of electrolytic capacitor: $c = 1000 \frac{\mu F}{A} \times I_{SUPPLY}$

Do not connect or disconnect motor during operation!

Motor cable and motor inductivity might lead to voltage spikes when the motor is disconnected / connected while energized. These voltage spikes might exceed voltage limits of the driver MOSFETs and might permanently damage them. Therefore, always disconnect power supply before connecting / disconnecting the motor.

Keep the power supply voltage below the upper limit of 28V!

Otherwise the driver electronics will seriously be damaged! Especially, when the selected operating voltage is near the upper limit a regulated power supply is highly recommended.

There is no reverse polarity protection!

The module will short any reversed supply voltage due to internal diodes of the driver transistors.

Disclaimer

TRINAMIC Motion Control GmbH & Co. KG does not authorize or warrant any of its products for use in life support systems, without the specific written consent of TRINAMIC Motion Control GmbH & Co. KG. Life support systems are equipment intended to support or sustain life, and whose failure to perform, when properly used in accordance with instructions provided, can be reasonably expected to result in personal injury or death. Information given in this data sheet is believed to be accurate and reliable. However no responsibility is assumed for the consequences of its use nor for any infringement of patents or other rights of third parties which may result from its use.

Specifications are subject to change without notice. All trademarks used are property of their respective owners.

Revision History

Version	Date	Author SD – Sonja Dwersteg	Description
1.00	2013-DEC-03	SD	Initial version
1.01	2014-MAR-24	SD	Current range programmable with TMCM-1043 USB serial programmer.