TMA300 Series

Medical & ITE Grade 300W AC/DC Power Adapters

FEATURES

- Fanless 300W Output Power
- Energy Efficiency Level VI
- 0.9 Active Power Factor
- No Load Power Consumption < 0.5W
- Medical & ITE Dual Approvals



ELECTRICAL SPECIFICATIONS

Input Voltage Range ..... 90-264 VAC
Input Frequency ..... 47-63 Hz
Input Current ..... 3.2A rms max. @ 115 VAC, 2.2A rms max. @ 230 VAC
Inrush Current ..... 80A @ 115 VAC or 130A @ 230 VAC, at 25°C cold start
Earth Leakage Current ..... 250 µA max. @ 264 VAC (Class I)
Touch Current ..... 100 µA max. @ 264 VAC
Power Factor ..... 0.9 min. @ full load, 115/230 VAC
No Load Consumption ..... 0.5W max.
Voltage Regulation ..... ±5%
Output Power Ratings ..... See table
Ripple and Noise ..... See table

GENERAL SPECIFICATIONS

Efficiency ..... 88% min. @ avg. load, 115/230 VAC
Hold-up Time ..... 10 ms min. @ full load, 115 VAC
Switching Frequency ..... 82-96 kHz
Operating Temperature ..... 0°C to +60°C
Storage Temperature ..... -20°C to +85°C
Relative Humidity ..... 0% to 90% non-condensing
Derating ..... Derate from 100% at +40°C linearly to 50% at +60°C
Short Circuit Protection ..... Auto recovery
Over Voltage Protection ..... Auto recovery
Over Load Protection ..... Set at 105-150% of its nominal output voltage; Auto recovery
Withstand Voltage ..... 5,656 VDC from input to output, 2,121 VDC from input to ground
MTBF ..... 220 kHrs minimum at full load, 25°C ambient, calculated per Bellcore TR-332

STANDARDS & COMPLIANCES

EMC Standards ..... EN60601-1-2, EN55011, EN55022, EN55024, FCC Parts 15 & 18 Class B
Safety Standards ..... IEC/EN/UL 60601-1 3rd Edition, ANSI/AAMI ES 60601-1:2005, CSA C22.2 No. 60601-1:08 UL/IEC/EN 60950-1 2nd Edition, CSA C22.2 No. 60950-1 2nd Ed.
Agency Approvals ..... UL, cUL, TUV, CB, CE
Other Compliances ..... RoHS, DOE Level VI

MODELS LIST

Product No. (1)	Output Voltage	Output Current	Ripple & Noise (Vp-p) (2)	Max. Output Power
TMA300-12	12V	25A	240mV	300W
TMA300-19	19V	15.79A	300mV	300W
TMA300-24	24V	12.5A	300mV	300W
TMA300-28	28V	10.71A	300mV	300W
TMA300-48	48V	6.25A	300mV	300W
TMA300-54	54V	5.56A	300mV	300W

Notes:

1. The listed P/N's are for Class I models equipped with IEC 320/C14 AC inlet. Add suffix "-C2" to order Class II models equipped with IEC 320/C18 AC inlet, e.g. use P/N TMA300-24-C2 to order 24V Class II model.
2. Peak-to-peak with 20MHz bandwidth with a tantalum 10µF in parallel with 0.1µF ceramic capacitor.

MECHANICAL SPECIFICATIONS

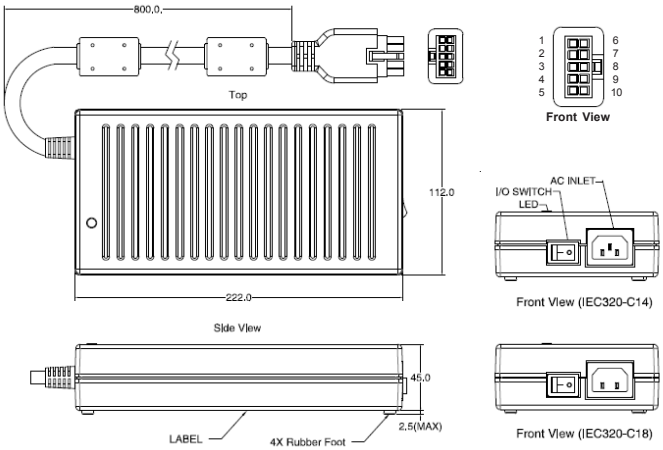

DC OUTPUT CONNECTOR										
PIN	1	2	3	4	5	6	7	8	9	10
FUNCTION	Return	Return	Return	Return	AC GND / *N.C.	+V	+V	+V	+V	N.C.
*N.C. on Class II models										

Notes:

1. Unit: mm
2. Weight: 1.57 kgs. (3.46 lbs. approx.)
3. Output Connector: Molex Mini-Fit Jr. P/N 39-01-2100 (10-pin connector, 4.2mm pitch) or equivalent
4. Mating Connector: Molex P/N 39-28-1123 or equivalent
5. Contact TRUMPower for other output connector options.

Tumbler Technologies + TRUMPower

3350 Scott Blvd., Building 13 • Santa Clara, California 95054, USA • 408-988-6616 • sales@trumpower.com • www.TRUMPower.com