- **Organization**
  TM124MBK36C . . . 1048576 × 36
  TM248NBK36C . . . 2097152 × 36
- **Single 5-V Power Supply (±10% Tolerance)**
- **72-pin Leadless Single In-Line Memory Module (SIMM)**
- **TM124MBK36C – Utilizes Eight 4-Megabit DRAMs in Plastic Small-Outline J-Lead (SOJ) Packages and Two 4-Megabit Quad-$\overline{CAS}$ DRAMs in Plastic SOJ Packages**
- **TM248NBK36C – Utilizes Sixteen 4-Megabit DRAMs in Plastic SOJ Packages and Four 4-Megabit Quad-$\overline{CAS}$ DRAMs in Plastic SOJ Packages**
- **Long Refresh Period**
  16 ms (1024 Cycles)
- **All Inputs, Outputs, Clocks Fully TTL Compatible**
- **3-State Output**
- **Common $\overline{CAS}$ Control for Nine Common Data-In and Data-Out Lines, in Four Blocks**
- **Enhanced Page Mode Operation With $\overline{CAS}$-Before-$\overline{RAS}$ (CBR), $\overline{RAS}$-Only, and Hidden Refresh**
- **Presence Detect**
- **Performance Ranges:**

	ACCESS TIME t_{RAC} (MAX)	ACCESS TIME t_{AA} (MAX)	ACCESS TIME t_{CAC} (MAX)	READ OR WRITE CYCLE (MIN)
′124MBK36C-60	60 ns	30 ns	15 ns	110 ns
′124MBK36C-70	70 ns	35 ns	18 ns	130 ns
′124MBK36C-80	80 ns	40 ns	20 ns	150 ns
′248NBK36C-60	60 ns	30 ns	15 ns	110 ns
′248NBK36C-70	70 ns	35 ns	18 ns	130 ns
′248NBK36C-80	80 ns	40 ns	20 ns	150 ns

- **Low Power Dissipation**
- **Operating Free-Air-Temperature Range**
  0°C to 70°C
- **Gold-Tabbed Versions Available:†**
  - **TM124MBK36C**
  - **TM248NBK36C**
- **Tin-Lead (Solder) Tabbed Versions**
  - **TM124MBK36S**
  - **TM248NBK36S**

description

TM124MBK36C

The TM124MBK36C is a dynamic random-access memory (DRAM) organized as four times 1048576 × 9 (bit 9 is generally used for parity) in a 72-pin leadless single in-line memory module (SIMM). The SIMM is composed of eight TMS44400DJ, 1 048 576 × 4-bit DRAMs, each in 20/26-lead plastic small-outline J-lead packages (SOJs), and two TMS44460DJ, 1048576 × 4-bit Quad-$\overline{CAS}$ DRAMs, in 24/26-lead plastic SOJs mounted on a substrate with decoupling capacitors. Each TMS44400DJ and TMS44460DJ is described in the TMS44400 and TMS44460 data sheets, respectively.

The TM124MBK36C is available in the single-sided BK leadless module for use with sockets.

The TM124MBK36C features $\overline{RAS}$ access times of 60 ns, 70 ns, and 80 ns. This device is characterized for operation from 0°C to 70°C.

† Part numbers in this data sheet are for the gold-tabbed version; the information applies to both gold-tabbed and solder-tabbed versions.

PRODUCTION DATA information is current as of publication date. Products conform to specifications per the terms of Texas Instruments standard warranty. Production processing does not necessarily include testing of all parameters.

Copyright © 1995, Texas Instruments Incorporated

TM248NBK36C

The TM248NBK36C is a DRAM organized as four times 2 097 152 × 9 (bit 9 is generally used for parity) in a 72-pin leadless SIMM) The SIMM is composed of sixteen TMS44400DJ, 1048576 × 4-bit DRAMs, each in 20/26-lead plastic SOJs, and four TMS44460DJ, 1 048 576 × 4-bit Quad-$\overline{\text{CAS}}$ DRAMs, in 24/26-lead plastic SOJs mounted on a substrate with decoupling capacitors. Each TMS44400DJ and TMS44460DJ is described in the TMS44400 or TMS44460 data sheet, respectively.

The TM248NBK36C is available in the double-sided BK leadless module for use with sockets.

The TM248NBK36C features $\overline{\text{RAS}}$ access times of 60 ns, 70 ns, and 80 ns. This device is rated for operation from 0°C to 70°C.

operation

TM124MBK36C

The TM124MBK36C operates as eight TMS44400DJs and two TMS44460DJs connected as shown in the functional block diagram and Table 1. The common I/O feature dictates the use of early write cycles to prevent contention on D and Q.

TM248NBK36C

The TM248NBK36C operates as sixteen TMS44400DJs and four TMS44460DJs connected as shown in the functional block diagram and Table 1. The common I/O feature dictates the use of early write cycles to prevent contention on D and Q.

BK SINGLE IN-LINE MODULE
(TOP VIEW)

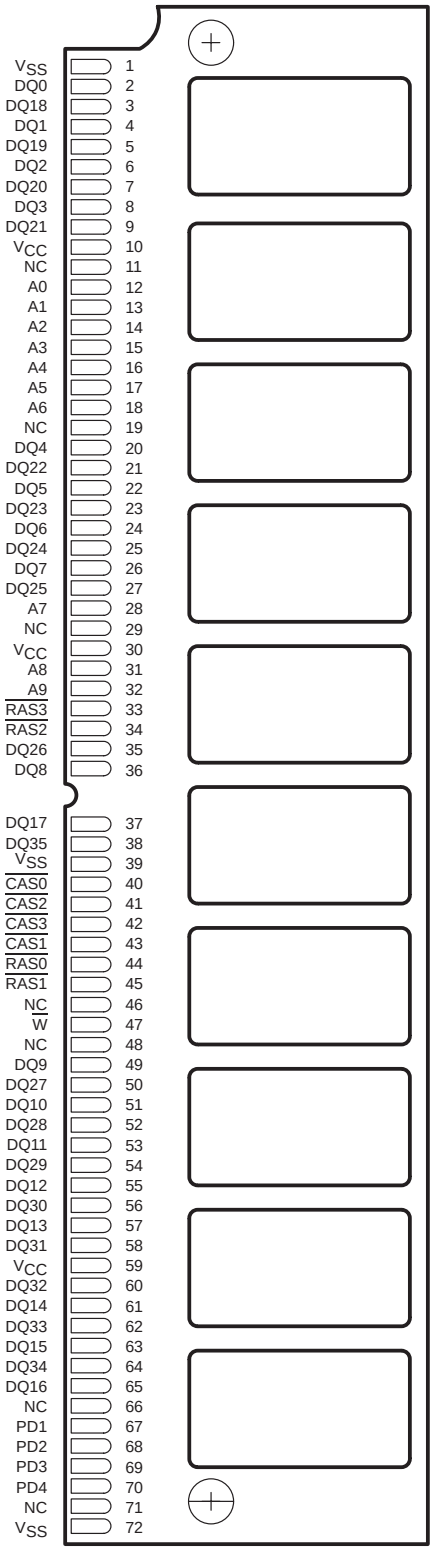

TM124MBK36C
(SIDE VIEW)



TM248NBK36C
(SIDE VIEW)

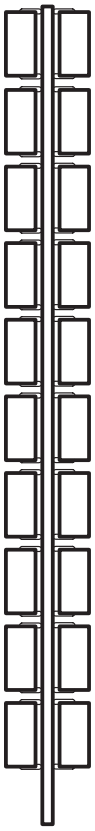

PIN NOMENCLATURE

$\overline{A0}$ – $\overline{A9}$	Address Inputs
$\overline{CAS0}$ – $\overline{CAS3}$	Column-Address Strobe
DQ0 – DQ35	Data In / Data Out
NC	No Connection
PD1 – PD4	Presence Detects
$\overline{RAS0}$ – $\overline{RAS3}$	Row-Address Strobe
V_{CC}	5-V Supply
V_{SS}	Ground
$\overline{W}$	Write Enable

PRESENCE DETECT

SIGNAL (PIN)		PD1 (67)	PD2 (68)	PD3 (69)	PD4 (70)
TM124MBK36C	80 ns	V_{SS}	V_{SS}	NC	V_{SS}
	70 ns	V_{SS}	V_{SS}	V_{SS}	NC
	60 ns	V_{SS}	V_{SS}	NC	NC
TM248NBK36C	80 ns	NC	NC	NC	V_{SS}
	70 ns	NC	NC	V_{SS}	NC
	60 ns	NC	NC	NC	NC

Table 1. Connection Table

DATA BLOCK	$\overline{\text{RASx}}$		$\overline{\text{CASx}}$
	SIDE 1	SIDE 2†	
DQ0–DQ7	$\overline{\text{RAS0}}$	$\overline{\text{RAS1}}$	$\overline{\text{CAS0}}$
DQ8	$\overline{\text{RAS0}}$	$\overline{\text{RAS1}}$	$\overline{\text{CAS0}}$
DQ9–DQ16	$\overline{\text{RAS0}}$	$\overline{\text{RAS1}}$	$\overline{\text{CAS1}}$
DQ17	$\overline{\text{RAS0}}$	$\overline{\text{RAS1}}$	$\overline{\text{CAS1}}$
DQ18–DQ25	$\overline{\text{RAS2}}$	$\overline{\text{RAS3}}$	$\overline{\text{CAS2}}$
DQ26	$\overline{\text{RAS2}}$	$\overline{\text{RAS3}}$	$\overline{\text{CAS2}}$
DQ27–DQ34	$\overline{\text{RAS2}}$	$\overline{\text{RAS3}}$	$\overline{\text{CAS3}}$
DQ35	$\overline{\text{RAS2}}$	$\overline{\text{RAS3}}$	$\overline{\text{CAS3}}$

† Side 2 applies to the TM248NBK36C only.

single-in-line memory module and components

PC substrate: 1,27 ± 0,1 mm (0.05 inch) nominal thickness; 0.005 inch/inch maximum warpage
Bypass capacitors: Multilayer ceramic
Contact area for TM124MBK36C and TM248NBK36C: Nickel plate and gold plate over copper
Contact area for TM124MBK36S and TM248NBK36S: Nickel plate and tin-lead over copper

functional block diagram (for TM124MBK36C and TM248NBK36C, Side 1)

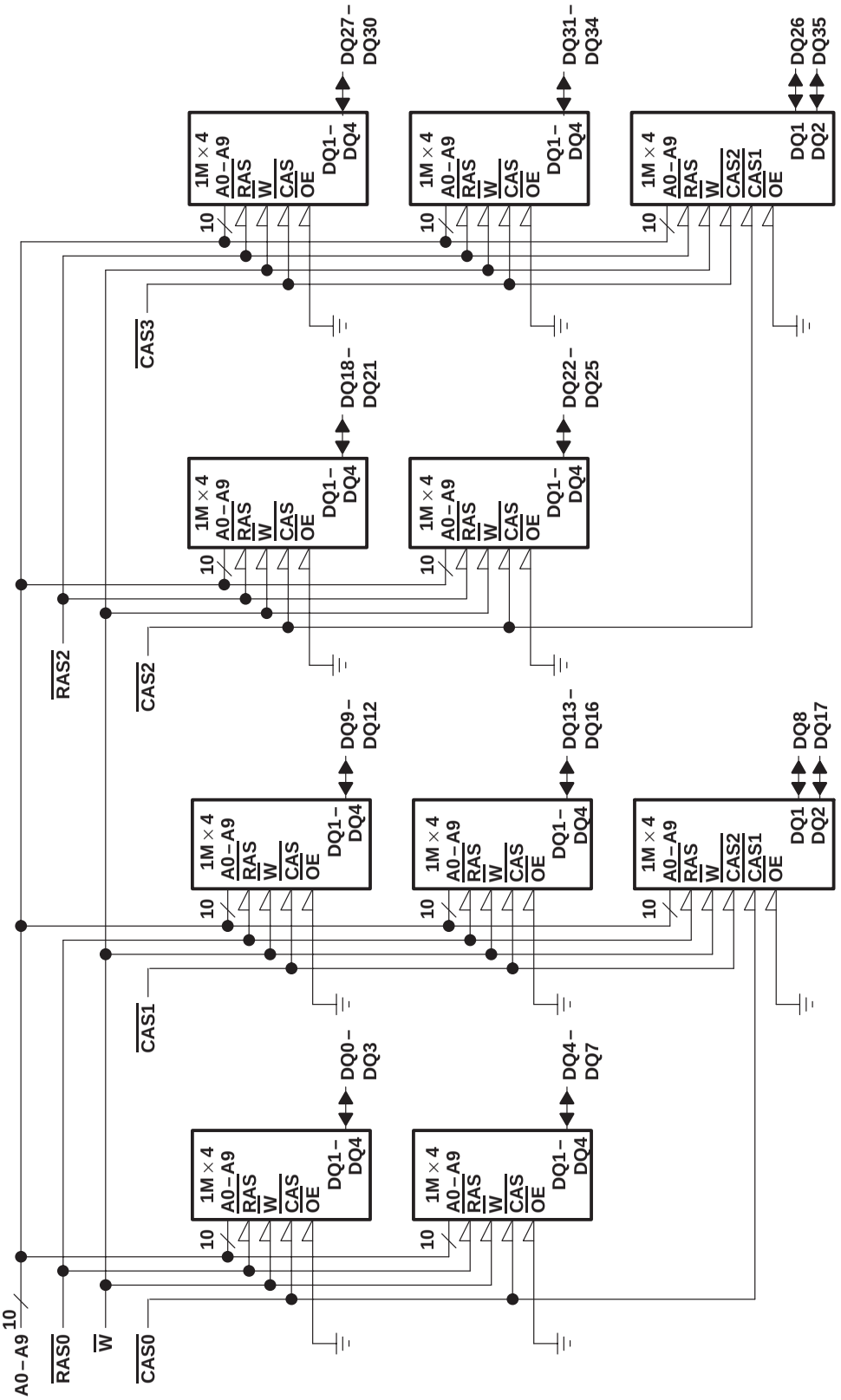

functional block diagram (for TM248NBK36C, Side 2)

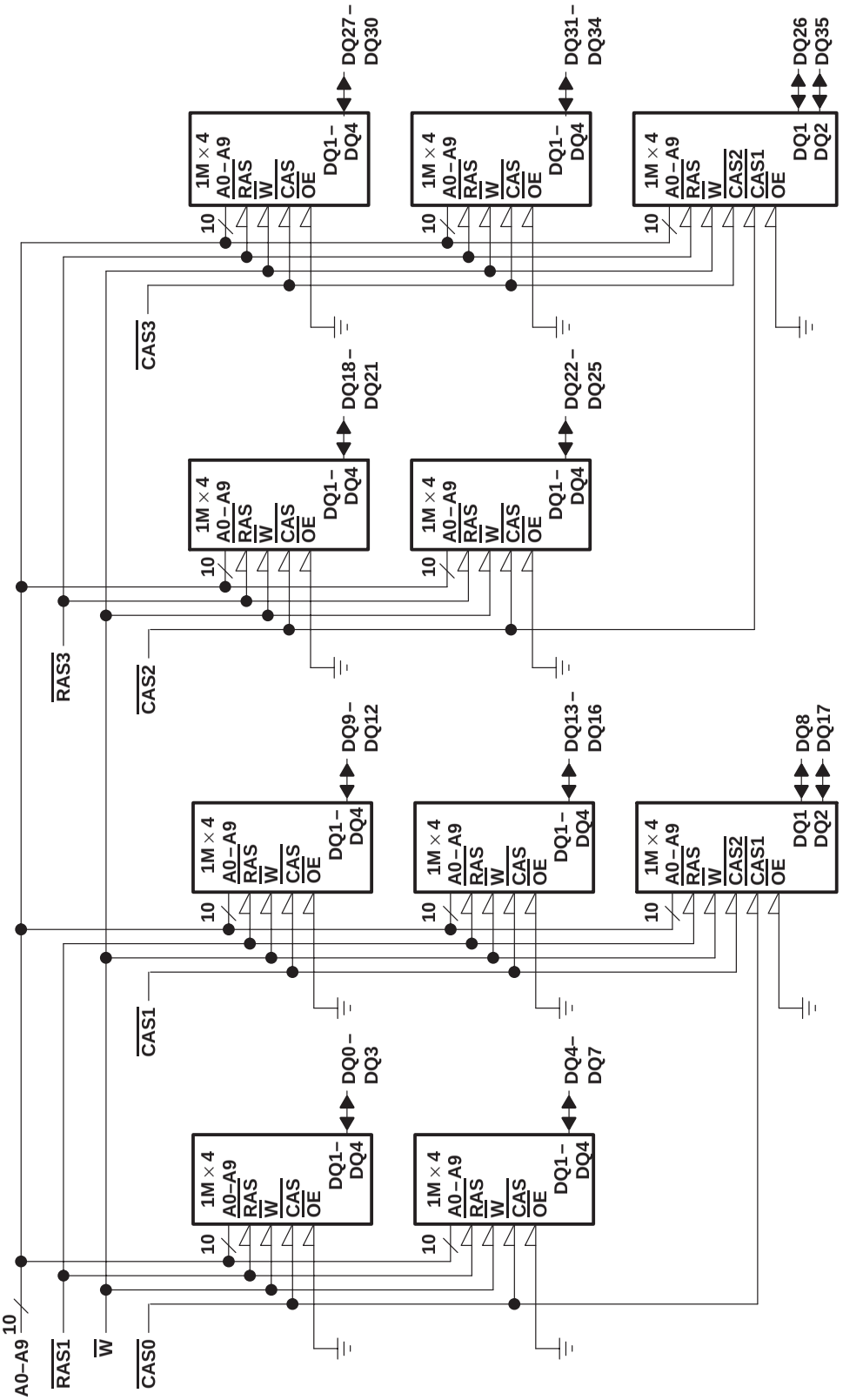

TEXAS INSTRUMENTS
POST OFFICE BOX 1443 • HOUSTON, TEXAS 77251–1443

absolute maximum ratings over operating free-air temperature range (unless otherwise noted)†

Supply voltage range on V_{CC} (see Note 1) . . . . . – 1 V to 7 V
Supply voltage range on any pin (see Note 1) . . . . . – 1 V to 7 V
Short-circuit output current . . . . . 50 mA
Power dissipation . . . . . 10 W
Operating free-air temperature range, T_A . . . . . 0°C to 70°C
Storage temperature range, T_{stg} . . . . . – 55°C to 125°C

† Stresses beyond those listed under "absolute maximum ratings" may cause permanent damage to the device. These are stress ratings only, and functional operation of the device at these or any other conditions beyond those indicated under "recommended operating conditions" is not implied. Exposure to absolute-maximum-rated conditions for extended periods may affect device reliability.

NOTE 1: All voltage values are with respect to V_{SS}.

recommended operating conditions

		MIN	NOM	MAX	UNIT
V_{CC}	Supply voltage	4.5	5	5.5	V
V_{IH}	High-level input voltage	2.4		6.5	V
V_{IL}	Low-level input voltage (see Note 2)	– 1		0.8	V
T_A	Operating free-air temperature	0		70	°C

NOTE 2: The algebraic convention, where the more negative (less positive) limit is designated as minimum, is used for logic-voltage levels only.

electrical characteristics over recommended ranges of supply voltage and operating free-air temperature (unless otherwise noted)

PARAMETER		TEST CONDITIONS	'124MBK36C-60		'124MBK36C-70		'124MBK36C-80		UNIT
			MIN	MAX	MIN	MAX	MIN	MAX	
V_{OH}	High-level output voltage	I_{OH} = – 5 mA	2.4		2.4		2.4		V
V_{OL}	Low-level output voltage	I_{OL} = 4.2 mA		0.4		0.4		0.4	V
I_I	Input current (leakage)	V_{CC} = 5.5 V, V_I = 0 V to 6.5 V, All other pins = 0 V to V_{CC}		± 10		± 10		± 10	µA
I_O	Output current (leakage)	V_{CC} = 5.5 V, V_O = 0 V to V_{CC}, $\overline{CAS}$ high		± 10		± 10		± 10	µA
I_{CC1}	Read- or write-cycle current (see Note 3)	V_{CC} = 5.5 V, Minimum cycle		1050		900		800	mA
I_{CC2}	Standby current	V_{IH} = 2.4 V (TTL), after 1 memory cycle, $\overline{RAS}$ and $\overline{CAS}$ high		20		20		20	mA
		V_{IH} = V_{CC} – 0.2 V (CMOS), after 1 memory cycle, $\overline{RAS}$ and $\overline{CAS}$ high		10		10		10	mA
I_{CC3}	Average refresh current ($\overline{RAS}$ only or CBR) (see Note 3)	V_{CC} = 5.5 V, Minimum cycle, $\overline{RAS}$ cycling, $\overline{CAS}$ high ($\overline{RAS}$ only), $\overline{RAS}$ low after $\overline{CAS}$ low (CBR)		1050		900		800	mA
I_{CC4}	Average page current (see Note 4)	V_{CC} = 5.5 V, t_{PC} = Minimum, $\overline{RAS}$ low, $\overline{CAS}$ cycling		900		800		700	mA

NOTES: 3. Measured with a maximum of one address change while $\overline{RAS}$ = V_{IL}
4. Measured with a maximum of one address change while $\overline{CAS}$ = V_{IH}

electrical characteristics over recommended ranges of supply voltage and operating free-air temperature (unless otherwise noted)

PARAMETER		TEST CONDITIONS	'248NBK36C-60		'248NBK36C-70		'248NBK36C-80		UNIT
			MIN	MAX	MIN	MAX	MIN	MAX	
V_{OH}	High-level output voltage	I_{OH} = – 5 mA	2.4		2.4		2.4		V
V_{OL}	Low-level output voltage	I_{OL} = 4.2 mA		0.4		0.4		0.4	V
I_I	Input current (leakage)	V_{CC} = 5.5 V, V_I = 0 V to 6.5 V, All other pins = 0 V to V_{CC}		± 20		± 20		± 20	µA
I_O	Output current (leakage)	V_{CC} = 5.5 V, V_O = 0 V to V_{CC}, $\overline{CAS}$ high		± 20		± 20		± 20	µA
I_{CC1}	Read or write cycle current (see Note 3)	V_{CC} = 5.5 V, Minimum cycle		1070		920		820	mA
I_{CC2}	Standby current	V_{IH} = 2.4 V (TTL), after 1 memory cycle, $\overline{RAS}$ and $\overline{CAS}$ high		40		40		40	mA
		V_{IH} = V_{CC} – 0.2 V (CMOS), after 1 memory cycle, $\overline{RAS}$ and $\overline{CAS}$ high		20		20		20	mA
I_{CC3}	Average refresh current ($\overline{RAS}$ only or CBR) (see Note 3)	V_{CC} = 5.5 V, Minimum cycle, $\overline{RAS}$ cycling, $\overline{CAS}$ high ($\overline{RAS}$ only), $\overline{RAS}$ low after $\overline{CAS}$ low (CBR)		2100		1800		1600	mA
I_{CC4}	Average page current (see Note 4)	V_{CC} = 5.5 V, t_{PC} = Minimum, $\overline{RAS}$ low, $\overline{CAS}$ cycling		920		820		720	mA

NOTES: 3. Measured with a maximum of one address change while $\overline{RAS}$ = V_{IL}
4. Measured with a maximum of one address change while $\overline{CAS}$ = V_{IH}

capacitance over recommended ranges of supply voltage and operating free-air temperature, f = 1 MHz (see Note 5)

PARAMETER		'124MBK36C		'248NBK36C		UNIT
		MIN	MAX	MIN	MAX	
$C_{i(A)}$	Input capacitance, A0 – A9		50		100	pF
$C_{i(R)}$	Input capacitance, $\overline{RAS}$ inputs		35		35	pF
$C_{i(C)}$	Input capacitance, $\overline{CAS}$ inputs		21		42	pF
$C_{i(W)}$	Input capacitance, $\overline{W}$		70		140	pF
$C_{o(DQ)}$	Output capacitance on DQ pins		7		14	pF

NOTE 5: V_{CC} equal to 5 V ± 0.5 V and the bias on pins under test is 0 V.

switching characteristics over recommended ranges of supply voltage and operating free-air temperature

PARAMETER		’124MBK36C-60 ’248NBK36C-60		’124MBK36C-70 ’248NBK36C-70		’124MBK36C-80 ’248NBK36C-80		UNIT
		MIN	MAX	MIN	MAX	MIN	MAX	
t_{CAC}	Access time from $\overline{CAS}$ low		15		18		20	ns
t_{AA}	Access time from column-address		30		35		40	ns
t_{RAC}	Access time from $\overline{RAS}$ low		60		70		80	ns
t_{CPA}	Access time from column precharge		35		40		45	ns
t_{CLZ}	$\overline{CAS}$ to output in low Z	0		0		0		ns
t_{OFF}	Output disable time after $\overline{CAS}$ high (see Note 6)	0	15	0	18	0	20	ns

NOTE 6: t_{OFF} is specified when the output is no longer driven.

timing requirements over recommended ranges of supply voltage and operating free-air temperature

		’124MBK36C-60 ’248NBK36C-60		’124MBK36C-70 ’248NBK36C-70		’124MBK36C-80 ’248NBK36C-80		UNIT
		MIN	MAX	MIN	MAX	MIN	MAX	
t_{RC}	Cycle time, random read or write (see Note 7)	110		130		150		ns
t_{RWC}	Cycle time, read-write	130		153		175		ns
t_{PC}	Cycle time, page-mode read or write (see Note 8)	40		45		50		ns
t_{RASP}	Pulse duration, page mode, $\overline{RAS}$ low	60	100 000	70	100 000	80	100 000	ns
t_{RAS}	Pulse duration, nonpage mode, $\overline{RAS}$ low	60	10 000	70	10 000	80	10 000	ns
t_{CAS}	Pulse duration, $\overline{CAS}$ low	15	10 000	18	10 000	20	10 000	ns
t_{CP}	Pulse duration, $\overline{CAS}$ high	10		10		10		ns
t_{RP}	Pulse duration, $\overline{RAS}$ high (precharge)	40		50		60		ns
t_{WP}	Pulse duration, write	15		15		15		ns
t_{ASC}	Setup time, column address before $\overline{CAS}$ low	0		0		0		ns
t_{ASR}	Setup time, row address before $\overline{RAS}$ low	0		0		0		ns
t_{DS}	Setup time, data	0		0		0		ns
t_{RCS}	Setup time, read before $\overline{CAS}$ low	0		0		0		ns
t_{CWL}	Setup time, $\overline{W}$ time before $\overline{CAS}$ high	15		18		20		ns
t_{RWL}	Setup time, $\overline{W}$ low before $\overline{RAS}$ high	15		18		20		ns
t_{WCS}	Setup time, $\overline{W}$ low before $\overline{CAS}$ low	0		0		0		ns
t_{WSR}	Setup time, $\overline{W}$ high (CBR refresh only)	10		10		10		ns
t_{CAH}	Hold time, column address after $\overline{CAS}$ low	10		15		15		ns
t_{DHR}	Hold time, data after $\overline{RAS}$ low (see Note 9)	50		55		60		ns
t_{DH}	Hold time, data	10		15		15		ns
t_{AR}	Hold time, column address after $\overline{RAS}$ low (see Note 99)	50		55		60		ns
t_{CLCH}	Hold time, $\overline{CAS}$ low to $\overline{CAS}$ high	5		5		5		ns
t_{RAH}	Hold time, row address after $\overline{RAS}$ low	10		10		10		ns
t_{RCH}	Hold time, read after $\overline{CAS}$ high (see Note 10)	0		0		0		ns
t_{RRH}	Hold time, read after $\overline{RAS}$ high (see Note 10)	0		0		0		ns

NOTES: 7. All cycles assume t_T = 5 ns.
8. To assure t_{PC} min, t_{ASC} should be ≥ 5 ns.
9. The minimum value is measured when t_{RCD} is set to t_{RCD} min as a reference.
10. Either t_{RRH} or t_{RCH} must be satisfied for a read cycle.

timing requirements over recommended ranges of supply voltage and operating free-air temperature (continued)

		’124MBK36C-60 ’248NBK36C-60		’124MBK36C-70 ’248NBK36C-70		’124MBK36C-80 ’248NBK36C-80		UNIT
		MIN	MAX	MIN	MAX	MIN	MAX	
t_{WCH}	Hold time, write after $\overline{CAS}$ low	15		15		15		ns
t_{WCR}	Hold time, write after $\overline{RAS}$ low (see Note 9)	50		55		60		ns
t_{WHR}	Hold time, $\overline{W}$ high (CBR refresh only)	10		10		10		ns
t_{CHR}	Delay time, $\overline{RAS}$ low to $\overline{CAS}$ high (CBR refresh only)	15		15		20		ns
t_{CRP}	Delay time, $\overline{CAS}$ high to $\overline{RAS}$ low	0		0		0		ns
t_{CSH}	Delay time, $\overline{RAS}$ low to $\overline{CAS}$ high	60		70		80		ns
t_{CSR}	Delay time, $\overline{CAS}$ low to $\overline{RAS}$ low (CBR refresh only)	10		10		10		ns
t_{RAD}	Delay time, $\overline{RAS}$ low to column address (see Note 11)	15	30	15	35	15	40	ns
t_{RAL}	Delay time, column address to $\overline{RAS}$ high	30		35		40		ns
t_{CAL}	Delay time, column address to $\overline{CAS}$ high	30		35		40		ns
t_{RCD}	Delay time, $\overline{RAS}$ low to $\overline{CAS}$ low (see Note 11)	20	45	20	52	20	60	ns
t_{RPC}	Delay time, $\overline{RAS}$ high to $\overline{CAS}$ low (CBR refresh only)	0		0		0		ns
t_{RSH}	Delay time, $\overline{CAS}$ low to $\overline{RAS}$ high	15		18		20		ns
t_{REF}	Refresh time interval		16		16		16	ms
t_T	Transition time	2	50	2	50	2	50	ns

NOTES: 9. The minimum value is measured when t_{RCD} is set to t_{RCD} min as a reference.
10. Either t_{RRH} or t_{RCH} must be satisfied for a read cycle.
11. The maximum value is specified only to assure access time.

device symbolization (TM124MBK36C illustrated)

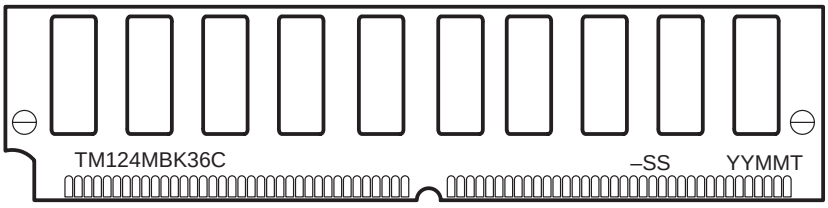

YY = Year Code
MM = Month Code
T = Assembly Site Code
–SS = Speed Code

NOTE: Location of symbolization may vary.

IMPORTANT NOTICE

Texas Instruments and its subsidiaries (TI) reserve the right to make changes to their products or to discontinue any product or service without notice, and advise customers to obtain the latest version of relevant information to verify, before placing orders, that information being relied on is current and complete. All products are sold subject to the terms and conditions of sale supplied at the time of order acknowledgement, including those pertaining to warranty, patent infringement, and limitation of liability.

TI warrants performance of its semiconductor products to the specifications applicable at the time of sale in accordance with TI's standard warranty. Testing and other quality control techniques are utilized to the extent TI deems necessary to support this warranty. Specific testing of all parameters of each device is not necessarily performed, except those mandated by government requirements.

CERTAIN APPLICATIONS USING SEMICONDUCTOR PRODUCTS MAY INVOLVE POTENTIAL RISKS OF DEATH, PERSONAL INJURY, OR SEVERE PROPERTY OR ENVIRONMENTAL DAMAGE ("CRITICAL APPLICATIONS"). TI SEMICONDUCTOR PRODUCTS ARE NOT DESIGNED, AUTHORIZED, OR WARRANTED TO BE SUITABLE FOR USE IN LIFE-SUPPORT DEVICES OR SYSTEMS OR OTHER CRITICAL APPLICATIONS. INCLUSION OF TI PRODUCTS IN SUCH APPLICATIONS IS UNDERSTOOD TO BE FULLY AT THE CUSTOMER'S RISK.

In order to minimize risks associated with the customer's applications, adequate design and operating safeguards must be provided by the customer to minimize inherent or procedural hazards.

TI assumes no liability for applications assistance or customer product design. TI does not warrant or represent that any license, either express or implied, is granted under any patent right, copyright, mask work right, or other intellectual property right of TI covering or relating to any combination, machine, or process in which such semiconductor products or services might be or are used. TI's publication of information regarding any third party's products or services does not constitute TI's approval, warranty or endorsement thereof.

Copyright © 1999, Texas Instruments Incorporated