TL284xB, TL384xB
HIGH-PERFORMANCE CURRENT-MODE PWM CONTROLLERS

SLVS610B – AUGUST 2006 – REVISED JULY 2007

FEATURES

- **Low Start-Up Current (<0.5 mA)**
- **Trimmed Oscillator Discharge Current**
- **Current Mode Operation to 500 kHz**
- **Automatic Feed-Forward Compensation**
- **Latching PWM for Cycle-by-Cycle Current Limiting**
- **Internally Trimmed Reference With Undervoltage Lockout**
- **High-Current Totem-Pole Output Undervoltage Lockout With Hysteresis**
- **Double-Pulse Suppression**

D (SOIC) OR P (PDIP) PACKAGE
(TOP VIEW)

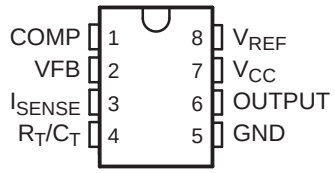

D (SOIC) PACKAGE
(TOP VIEW)

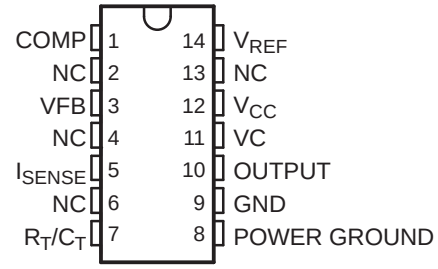

NC − No internal connection

DESCRIPTION/ORDERING INFORMATION

The TL284xB and TL384xB series of control integrated circuits provide the features that are necessary to implement off-line or dc-to-dc fixed-frequency current-mode control schemes, with a minimum number of external components. Internally implemented circuits include an undervoltage lockout (UVLO) and a precision reference that is trimmed for accuracy at the error amplifier input. Other internal circuits include logic to ensure latched operation, a pulse-width modulation (PWM) comparator that also provides current-limit control, and a totem-pole output stage designed to source or sink high-peak current. The output stage, suitable for driving N-channel MOSFETs, is low when it is in the off state.

The TL284xB and TL384xB series are pin compatible with the standard TL284x and TL384x with the following improvements. The start-up current is specified to be 0.5 mA (max), while the oscillator discharge current is trimmed to 8.3 mA (typ). In addition, during undervoltage lockout conditions, the output has a maximum saturation voltage of 1.2 V while sinking 10 mA (V_{CC} = 5 V).

Major differences between members of these series are the UVLO thresholds and maximum duty-cycle ranges. Typical UVLO thresholds of 16 V (on) and 10 V (off) on the TLx842B and TLx844B devices make them ideally suited to off-line applications. The corresponding typical thresholds for the TLx843B and TLx845B devices are 8.4 V (on) and 7.6 V (off). The TLx842B and TLx843B devices can operate to duty cycles approaching 100%. A duty-cycle range of 0% to 50% is obtained by the TLx844B and TLx845B by the addition of an internal toggle flip-flop, which blanks the output off every other clock cycle.The TL284xB-series devices are characterized for operation from –40°C to 85°C. The TL384xB-series devices are characterized for operation from 0°C to 70°C.

Please be aware that an important notice concerning availability, standard warranty, and use in critical applications of Texas Instruments semiconductor products and disclaimers thereto appears at the end of this data sheet.

PRODUCTION DATA information is current as of publication date. Products conform to specifications per the terms of the Texas Instruments standard warranty. Production processing does not necessarily include testing of all parameters.

Copyright © 2006–2007, Texas Instruments Incorporated

ORDERING INFORMATION

T_A	PACKAGE[1]		ORDERABLE PART NUMBER	TOP-SIDE MARKING
–40°C to 85°C	PDIP – P	Tube of 50	TL2842BP	TL2842BP
			TL2843BP	TL2843BP
			TL2844BP	TL2844BP
			TL2845BP	TL2845BP
	SOIC – D (8 pin)	Tube of 75	TL2842BD-8	2842B
		Reel of 2500	TL2842BDR-8	
		Tube of 75	TL2843BD-8	2843B
		Reel of 2500	TL2843BDR-8	
		Tube of 75	TL2844BD-8	2844B
		Reel of 2500	TL2844BDR-8	
		Tube of 75	TL2845BD-8	2845B
		Reel of 2500	TL2845BDR-8	
	SOIC – D (14 pin)	Tube of 75	TL2842BD	TL2842B
		Reel of 2500	TL2842BDR	
		Tube of 75	TL2843BD	TL2843B
		Reel of 2500	TL2843BDR	
		Tube of 75	TL2844BD	TL2844B
		Reel of 2500	TL2844BDR	
		Tube of 75	TL2845BD	TL2845B
		Reel of 2500	TL2845BDR	
0°C to 70°C	PDIP – P	Tube of 50	TL3842BP	TL3842BP
			TL3843BP	TL3843BP
			TL3844BP	TL3844BP
			TL3845BP	TL3845BP
	SOIC – D (8 pin)	Tube of 75	TL3842BD-8	3842B
		Reel of 2500	TL3842BDR-8	
		Tube of 75	TL3843BD-8	3843B
		Reel of 2500	TL3843BDR-8	
		Tube of 75	TL3844BD-8	3844B
		Reel of 2500	TL3844BDR-8	
		Tube of 75	TL3845BD-8	3845B
		Reel of 2500	TL3845BDR-8	
	SOIC – D (14 pin)	Tube of 75	TL3842BD	TL3842B
		Reel of 2500	TL3842BDR	
		Tube of 75	TL3843BD	TL3843B
		Reel of 2500	TL3843BDR	
		Tube of 75	TL3844BD	TL3844B
		Reel of 2500	TL3844BDR	
		Tube of 75	TL3845BD	TL3845B
		Reel of 2500	TL3845BDR	

(1) Package drawings, standard packing quantities, thermal data, symbolization, and PCB design guidelines are available at www.ti.com/sc/package.

FUNCTIONAL BLOCK DIAGRAM

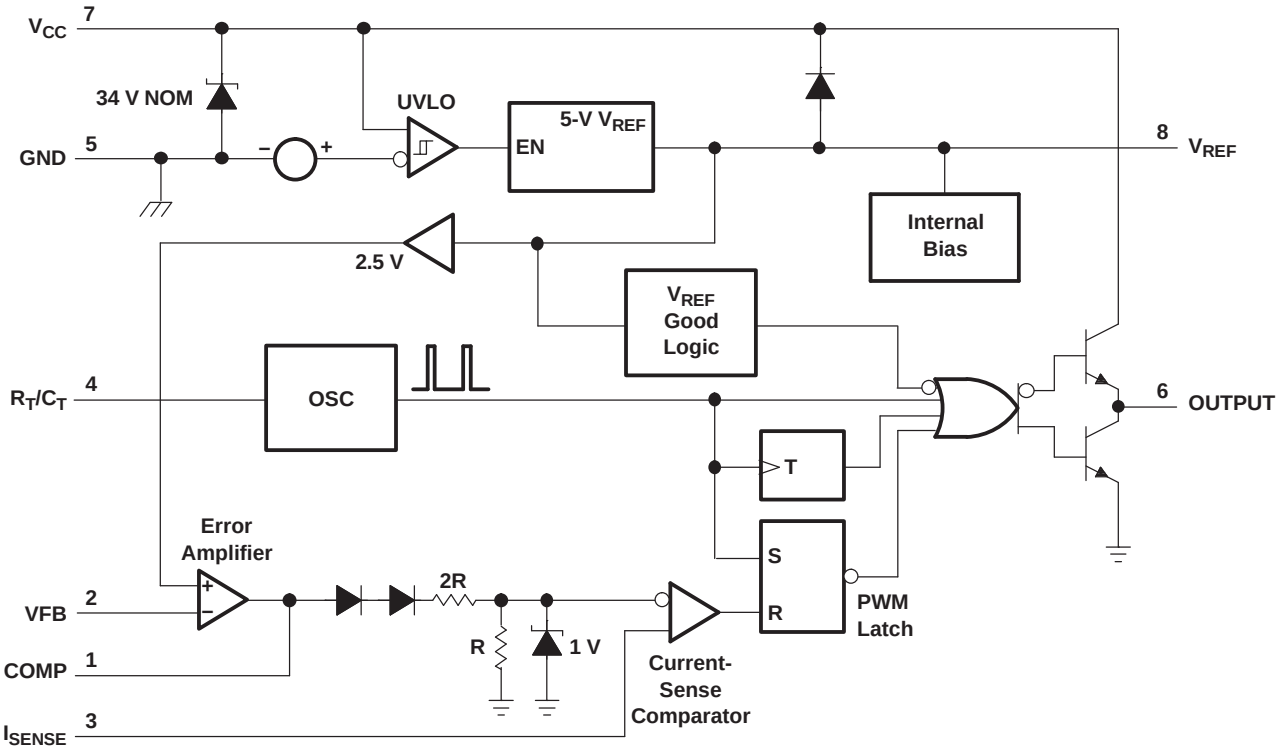

A. Pin numbers shown are for the 8-pin D package.

Absolute Maximum Ratings(1)(2)

over operating free-air temperature range (unless otherwise noted)

				MIN	MAX	UNIT
V_{CC}	Supply voltage	Low impedance source			30	V
		I_{CC} < 30 mA			Self limiting	
V_I	Analog input voltage range	VFB and I_{SENSE}		–0.3	6.3	V
I_{CC}	Supply current				30	mA
I_O	Output current				±1	A
$I_{O(sink)}$	Error amplifier output sink current				10	mA
θ_{JA}	Package thermal impedance(3)(4)	D package	8 pin		97	°C/W
			14 pin		86	
		P package			85	
	Output energy	Capacitive load			5	μJ
T_J	Virtual junction temperature				150	°C
T_{stg}	Storage temperature range			–65	150	°C
T_{lead}	Lead temperature	Soldering, 10 s			300	°C

(1) Stresses beyond those listed under "absolute maximum ratings" may cause permanent damage to the device. These are stress ratings only, and functional operation of the device at these or any other conditions beyond those indicated under "recommended operating conditions" is not implied. Exposure to absolute-maximum-rated conditions for extended periods may affect device reliability.
(2) All voltages are with respect to the device GND terminal.
(3) Maximum power dissipation is a function of $T_J(max)$, θ_{JA}, and T_A. The maximum allowable power dissipation at any allowable ambient temperature is $P_D = (T_J(max) – T_A)/\theta_{JA}$. Operating at the absolute maximum T_J of 150°C can impact reliability.
(4) The package thermal impedance is calculated in accordance with JESD 51-7.

Recommended Operating Conditions

			MIN	NOM	MAX	UNIT
V_{CC}	Supply voltage	V_{CC}			30	V
		VC(1)			30	
V_I	Input voltage	R_T/C_T	0		5.5	V
		VFB and I_{SENSE}	0		5.5	
V_O	Output voltage	OUTPUT	0		30	V
		POWER GROUND(1)	–0.1		1	
I_{CC}	Supply current, externally limited				25	mA
I_O	Average output current				200	mA
$I_{O(ref)}$	Reference output current				–20	mA
f_{osc}	Oscillator frequency			100	500	kHz
T_J	Operating free-air temperature	TL284xB	–40		85	°C
		TL384xB	0		70	

(1) The recommended voltages for VC and POWER GROUND apply only to the 14-pin D package.

Reference Section Electrical Characteristics

V_{CC} = 15 V[1], R_T = 10 kΩ, C_T = 3.3 nF, over recommended operating free-air temperature range (unless otherwise specified)

PARAMETER	TEST CONDITIONS	TL284xB			TL384xB			UNIT
		MIN	TYP[2]	MAX	MIN	TYP[2]	MAX	
Output voltage	I_O = 1 mA, T_J = 25°C	4.95	5	5.05	4.9	5	5.1	V
Line regulation	V_{CC} = 12 V to 25 V		6	20		6	20	mV
Load regulation	I_O = 1 mA to 20 mA		6	25		6	25	mV
Average temperature coefficient of output voltage			0.2	0.4		0.2	0.4	mV/°C
Output voltage, worst-case variation	V_{CC} = 12 V to 25 V, I_O = 1 mA to 20 mA	4.9		5.1	4.82		5.18	V
Output noise voltage	f = 10 Hz to 10 kHz, T_J = 25°C		50			50		μV
Output-voltage long-term drift	After 1000 h at T_J = 25°C		5	25		5	25	mV
Short-circuit output current		–30	–100	–180	–30	–100	–180	mA

(1) Adjust V_{CC} above the start threshold before setting it to 15 V.
(2) All typical values are at T_J = 25°C.

Oscillator Section[1] Electrical Characteristics

V_{CC} = 15 V[2], R_T = 10 kΩ, C_T = 3.3 nF, over recommended operating free-air temperature range (unless otherwise specified)

PARAMETER	TEST CONDITIONS	TL284xB			TL384xB			UNIT
		MIN	TYP[3]	MAX	MIN	TYP[3]	MAX	
Initial accuracy	T_J = 25°C	49	52	55	49	52	55	kHz
	T_A = T_{low} to T_{high}	48		56	48		56	
	T_J = 25°C, R_T = 6.2 kΩ, C_T = 1 nF	225	250	275	225	250	275	
Voltage stability	V_{CC} = 12 V to 25 V		0.2	1		0.2	1	%
Temperature stability			5			5		%
Amplitude	Peak to peak		1.7			1.7		V
Discharge current	T_J = 25°C, R_T/C_T = 2 V	7.8	8.3	8.8	7.8	8.3	8.8	mA
	R_T/C_T = 2 V	7.5		8.8	7.6		8.8	

(1) Output frequency equals oscillator frequency for the TL3842B and TL3843B. Output frequency is one-half the oscillator frequency for the TL3844B and TL3845B.
(2) Adjust V_{CC} above the start threshold before setting it to 15 V.
(3) All typical values are at T_J = 25°C.

Error-Amplifier Section Electrical Characteristics

V_{CC} = 15 V(1), R_T = 10 kΩ, C_T = 3.3 nF, over recommended operating free-air temperature range (unless otherwise specified)

PARAMETER	TEST CONDITIONS	TL284xB			TL384xB			UNIT
		MIN	TYP(2)	MAX	MIN	TYP(2)	MAX	
Feedback input voltage	COMP = 2.5 V	2.45	2.5	2.55	2.42	2.5	2.58	V
Input bias current			–0.3	–1		–0.3	–2	µA
Open-loop voltage amplification	V_O = 2 V to 4 V	65	90		65	90		dB
Gain-bandwidth product		0.7	1		0.7	1		MHz
Supply-voltage rejection ratio	V_{CC} = 12 V to 25 V	60	70		60	70		dB
Output sink current	VFB = 2.7 V, COMP = 1.1 V	2	6		2	6		mA
Output source current	VFB = 2.3 V, COMP = 5 V	–0.5	–0.8		–0.5	–0.8		mA
High-level output voltage	VFB = 2.3 V, R_L = 15 kΩ to GND	5	6		5	6		V
Low-level output voltage	VFB = 2.7 V, R_L = 15 kΩ to GND		0.7	1.1		0.7	1.1	V

(1) Adjust V_{CC} above the start threshold before setting it to 15 V.
(2) All typical values are at T_J = 25°C.

Current-Sense Section Electrical Characteristics

V_{CC} = 15 V(1), R_T = 10 kΩ, C_T = 3.3 nF, over recommended operating free-air temperature range (unless otherwise specified)

PARAMETER	TEST CONDITIONS	TL284xB			TL384xB			UNIT
		MIN	TYP(2)	MAX	MIN	TYP(2)	MAX	
Voltage amplification(3)(4)		2.85	3	3.15	2.85	3	3.15	V/V
Current-sense comparator threshold(3)	COMP = 5 V	0.9	1	1.1	0.9	1	1.1	V
Supply-voltage rejection ratio(3)	V_{CC} = 12 V to 25 V		70			70		dB
Input bias current			–2	–10		–2	–10	µA
Delay time to output	VFB = 0 V to 2 V		150	300		150	300	ns

(1) Adjust V_{CC} above the start threshold before setting it to 15 V.
(2) All typical values are at T_J = 25°C.
(3) Measured at the trip point of the latch, with VFB at 0 V.
(4) Measured between I_{SENSE} and COMP, with the input changing from 0 V to 0.8 V.

Output Section Electrical Characteristics

V_{CC} = 15 V(1), R_T = 10 kΩ, C_T = 3.3 nF, over recommended operating free-air temperature range (unless otherwise specified)

PARAMETER	TEST CONDITIONS	TL284xB			TL384xB			UNIT
		MIN	TYP(2)	MAX	MIN	TYP(2)	MAX	
High-level output voltage	I_{OH} = –20 mA	13	13.5		13	13.5		V
	I_{OH} = –200 mA	12	13.5		12	13.5		
Low-level output voltage	I_{OL} = 20 mA		0.1	0.4		0.1	0.4	V
	I_{OL} = 200 mA		1.5	2.2		1.5	2.2	
Rise time	C_L = 1 nF, T_J = 25°C		50	150		50	150	ns
Fall time	C_L = 1 nF, T_J = 25°C		50	150		50	150	ns
UVLO saturation	V_{CC} = 5 V, I_{OL} = 1 mA		0.7	1.2		0.7	1.2	V

(1) Adjust V_{CC} above the start threshold before setting it to 15 V.
(2) All typical values are at T_J = 25°C.

Undervoltage-Lockout Section Electrical Characteristics

V_{CC} = 15 V(1), R_T = 10 kΩ, C_T = 3.3 nF, over recommended operating free-air temperature range (unless otherwise specified)

PARAMETER	TEST CONDITIONS	TL284xB			TL384xB			UNIT
		MIN	TYP(2)	MAX	MIN	TYP(2)	MAX	
Start threshold voltage	TLx842B, TLx844B	15	16	17	14.5	16	17.5	V
	TLx843B, TLx845B	7.8	8.4	9	7.8	8.4	9	
Minimum operating voltage after start-up	TLx842B, TLx844B	9	10	11	8.5	10	11.5	V
	TLx843B, TLx845B	7	7.6	8.2	7	7.6	8.2	

(1) Adjust V_{CC} above the start threshold before setting it to 15 V.
(2) All typical values are at T_J = 25°C.

Pulse-Width Modulator Section Electrical Characteristics

V_{CC} = 15 V(1), R_T = 10 kΩ, C_T = 3.3 nF, over recommended operating free-air temperature range (unless otherwise specified)

PARAMETER	TEST CONDITIONS	TL284xB			TL384xB			UNIT
		MIN	TYP(2)	MAX	MIN	TYP(2)	MAX	
Maximum duty cycle	TL3842B, TL3843B	94	96	100	94	96	100	%
	TL3844B, TL3845B	47	48	50	47	48	50	
Minimum duty cycle				0			0	%

(1) Adjust V_{CC} above the start threshold before setting it to 15 V.
(2) All typical values are at T_J = 25°C.

Supply Voltage Electrical Characteristics

V_{CC} = 15 V(1), R_T = 10 kΩ, C_T = 3.3 nF, over recommended operating free-air temperature range (unless otherwise specified)

PARAMETER	TEST CONDITIONS	TL284xB			TL384xB			UNIT
		MIN	TYP(2)	MAX	MIN	TYP(2)	MAX	
Start-up current			0.3	0.5		0.3	0.5	mA
Operating supply current	VFB and I_{SENSE} at 0 V		11	17		11	17	mA
Limiting voltage	I_{CC} = 25 mA	30	34		30	34		V

(1) Adjust V_{CC} above the start threshold before setting it to 15 V.
(2) All typical values are at T_J = 25°C.

TYPICAL CHARACTERISTICS

SUPPLY CURRENT vs SUPPLY VOLTAGE

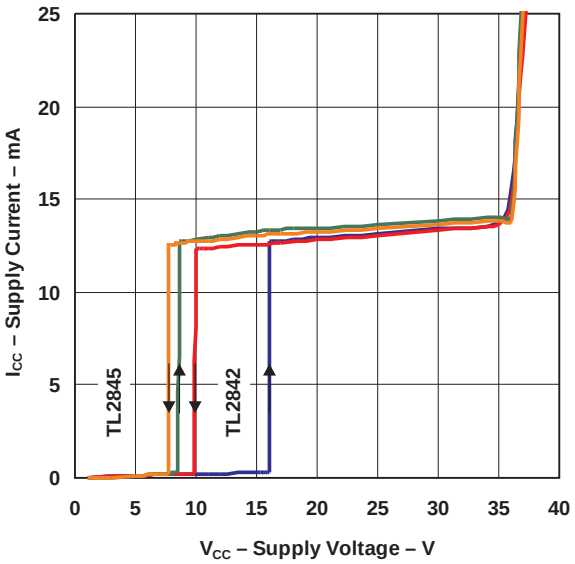

ERROR AMPLIFIER OPEN-LOOP GAIN AND PHASE vs FREQUENCY

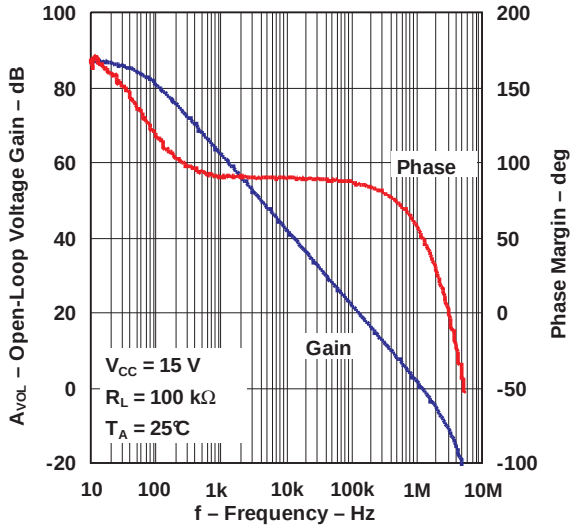

CURRENT-SENSE INPUT THRESHOLD vs ERROR AMPLIFIER OUTPUT VOLTAGE

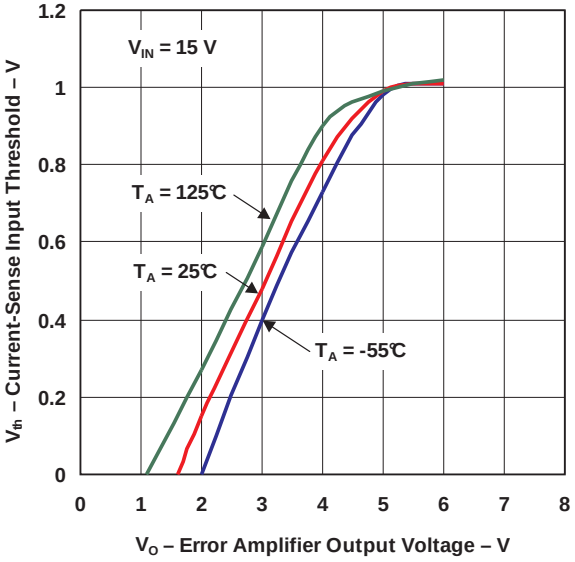

OSCILLATOR DISCHARGE CURRENT vs TEMPERATURE

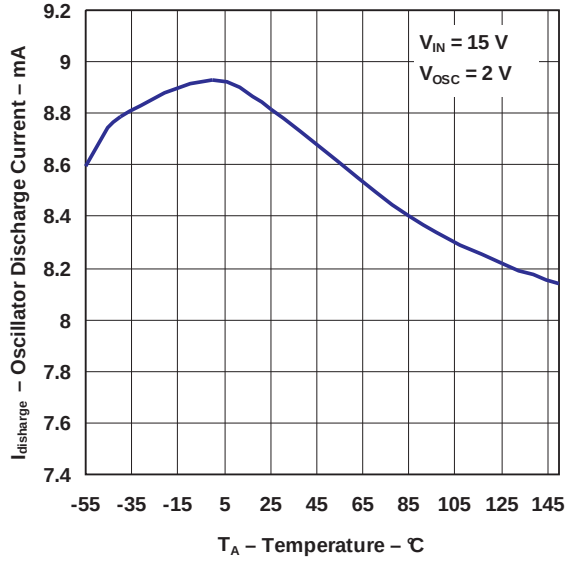

TYPICAL CHARACTERISTICS (continued)

REFERENCE VOLTAGE vs SOURCE CURRENT

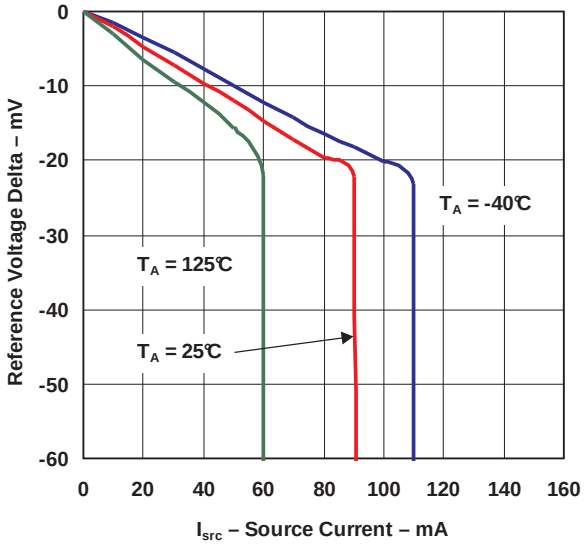

REFERENCE VOLTAGE vs TEMPERATURE

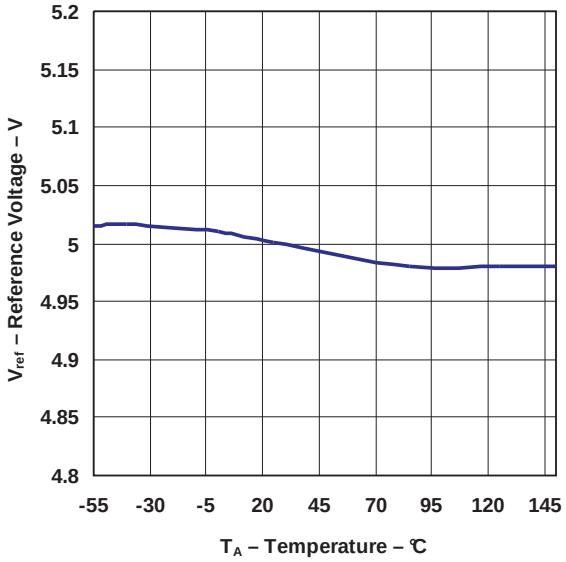

REFERENCE SHORT-CIRCUIT CURRENT vs TEMPERATURE

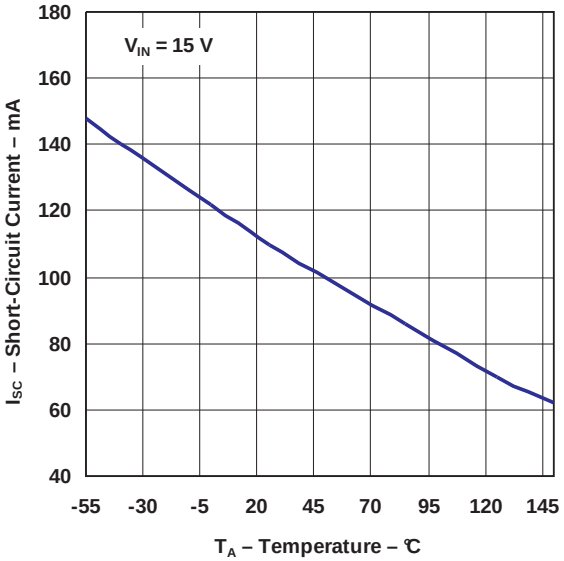

OUTPUT SATURATION VOLTAGE vs LOAD CURRENT

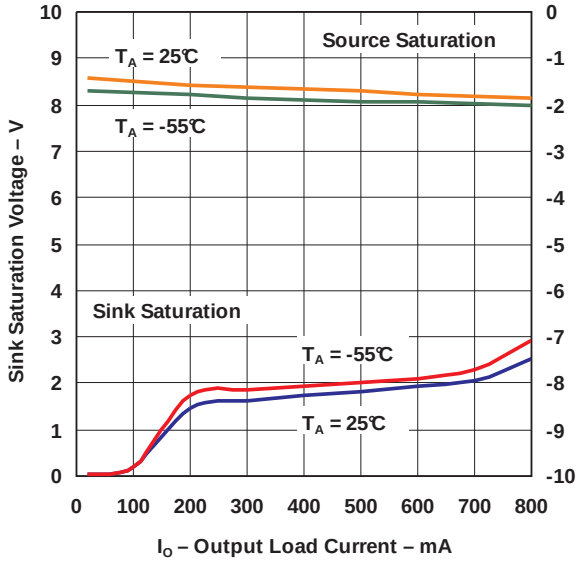

TYPICAL CHARACTERISTICS (continued)

MAXIMUM OUTPUT DUTY CYCLE vs TIMING RESISTOR

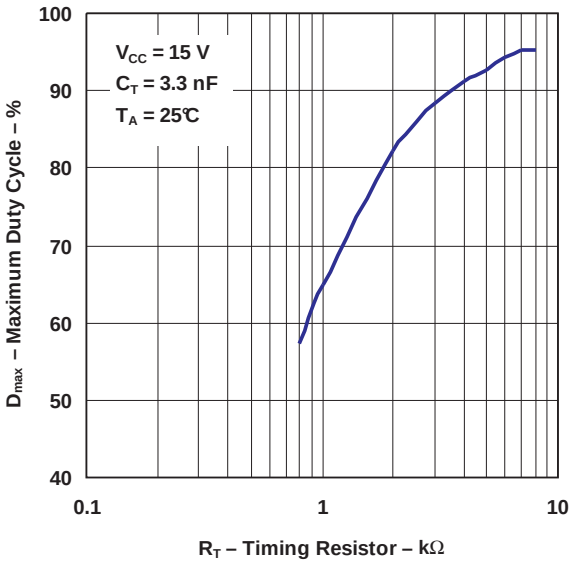

OUTPUT WAVEFORM

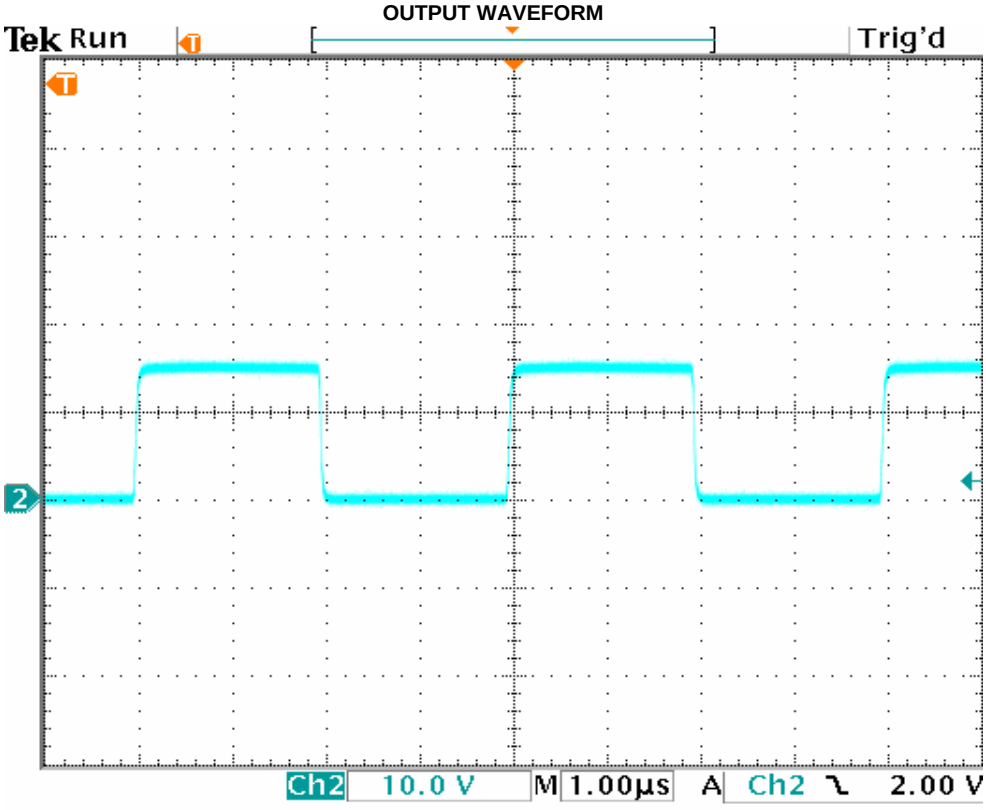

APPLICATION INFORMATION

The error-amplifier configuation circuit is shown in Figure 1.

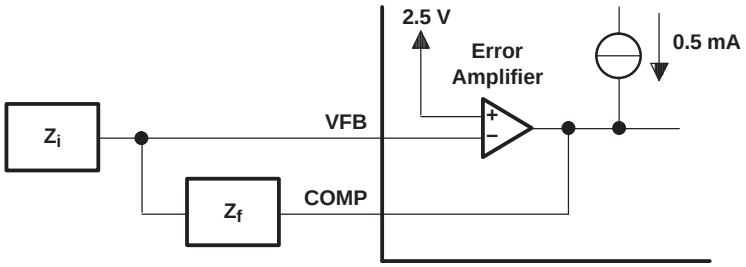

A. Error amplifier can source or sink up to 0.5 mA.

Figure 1. Error-Amplifier Configuration

The current-sense circuit is shown in Figure 2.

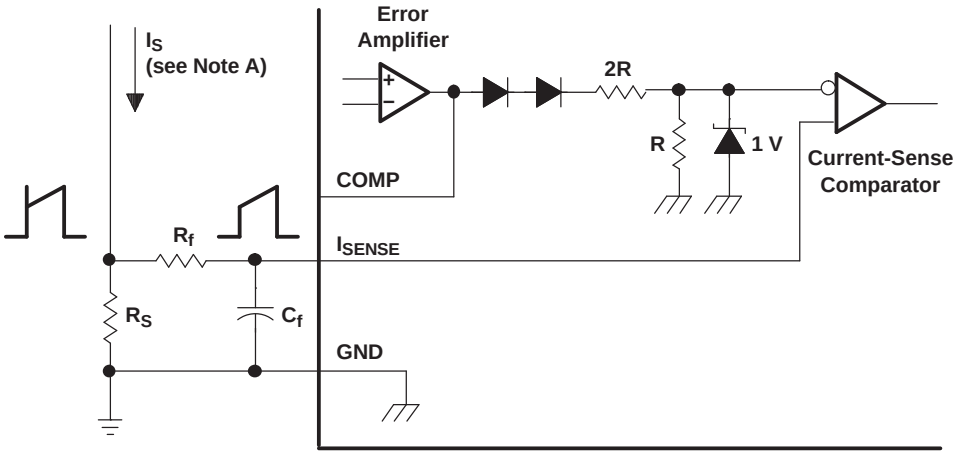

A. Peak current (I_S) is determined by the formula: $I_{S(max)} = 1\ V/R_S$

B. A small RC filter formed by resistor R_f and capacitor C_f may be required to suppress switch transients.

Figure 2. Current-Sense Circuit

The oscillator frequency is set using the circuit shown in Figure 3. The frequency is calculated as:

$$f = 1 / R_T C_T$$

For $R_T > 5\ k\Omega$:

$$f \approx 1.72 / R_T C_T$$

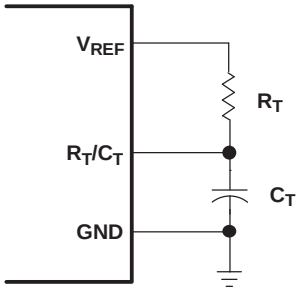

Figure 3. Oscillator Section

APPLICATION INFORMATION (continued)

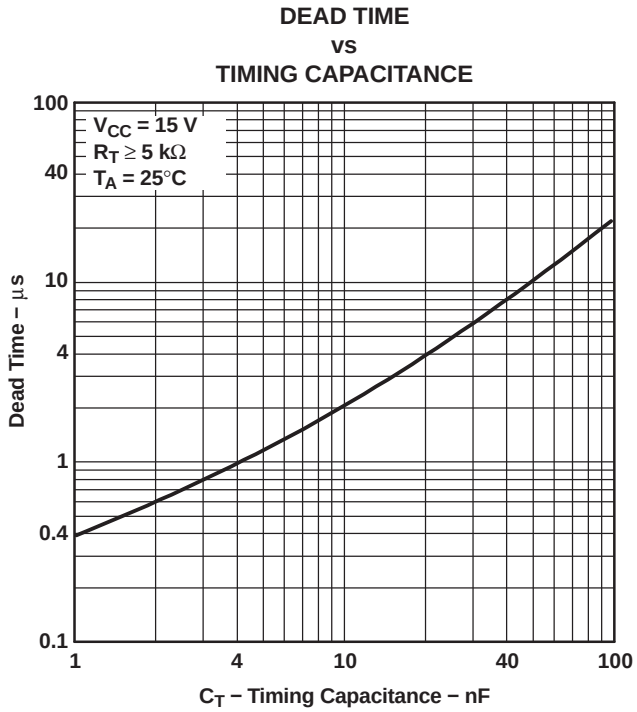

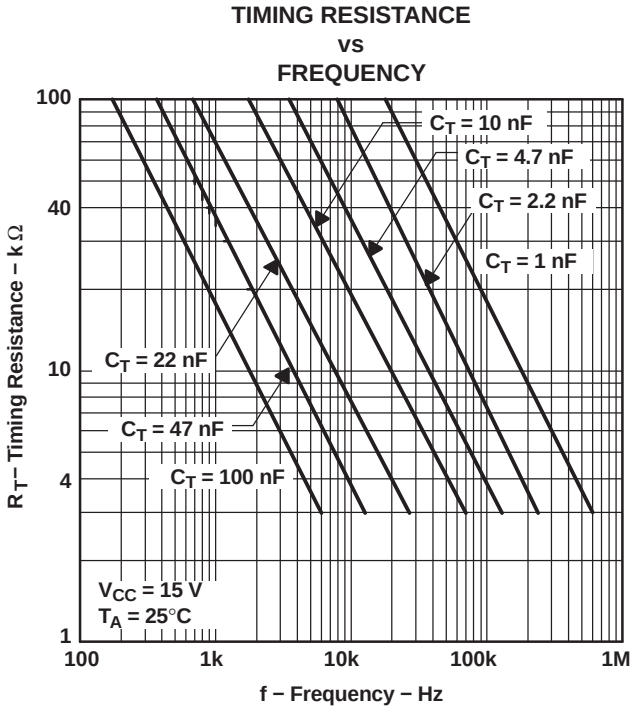

Open-Loop Laboratory Test Fixture

In the open-loop laboratory test fixture (see Figure 4), high peak currents associated with loads necessitate careful grounding techniques. Timing and bypass capacitors should be connected close to the GND terminal in a single-point ground. The transistor and 5-kΩ potentiometer sample the oscillator waveform and apply an adjustable ramp to the I_{SENSE} terminal.

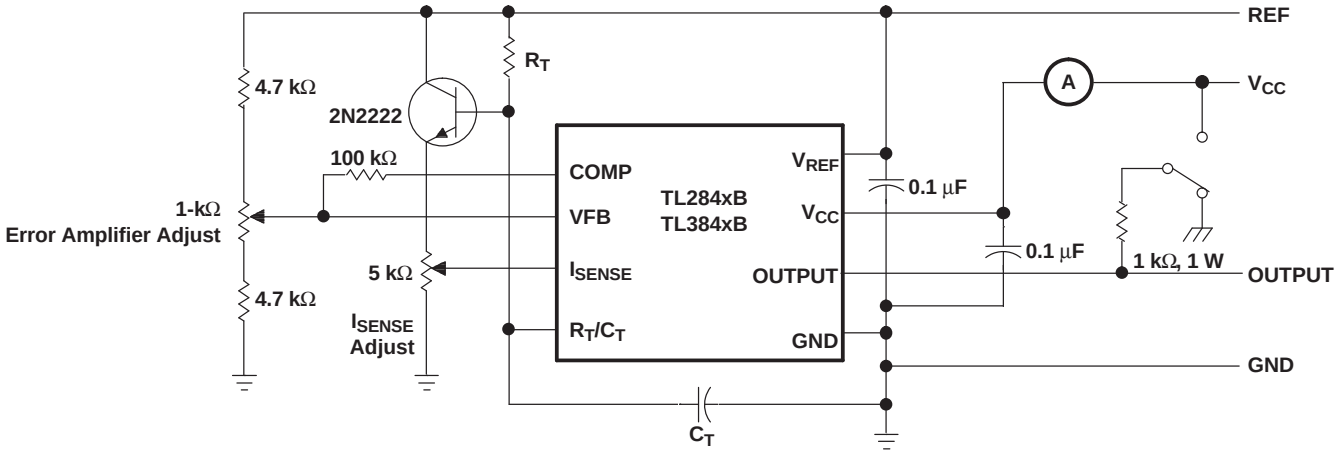

Figure 4. Open-Loop Laboratory Test Fixture

APPLICATION INFORMATION (continued)

Shutdown Technique

The PWM controller (see Figure 5) can be shut down by two methods: either raise the voltage at I_{SENSE} above 1 V or pull the COMP terminal below a voltage two diode drops above ground. Either method causes the output of the PWM comparator to be high (refer to block diagram). The PWM latch is reset dominant so that the output remains low until the next clock cycle after the shutdown condition at the COMP or I_{SENSE} terminal is removed. In one example, an externally latched shutdown can be accomplished by adding an SCR that resets by cycling V_{CC} below the lower UVLO threshold. At this point, the reference turns off, allowing the SCR to reset.

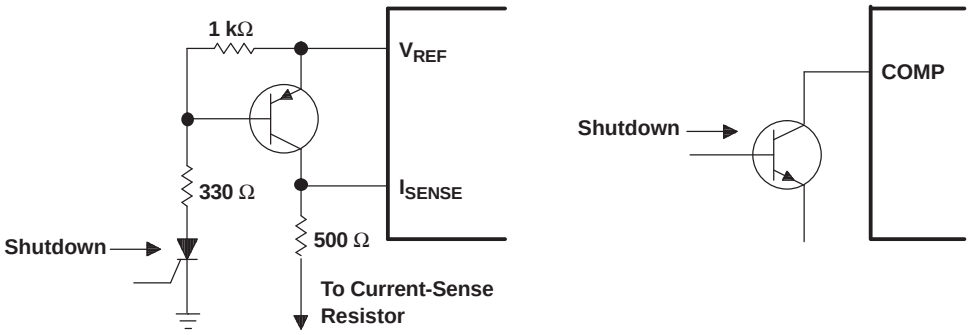

Figure 5. Shutdown Techniques

A fraction of the oscillator ramp can be summed resistively with the current-sense signal to provide slope compensation for converters requiring duty cycles over 50% (see Figure 6). Note that capacitor C forms a filter with R2 to suppress the leading-edge switch spikes.

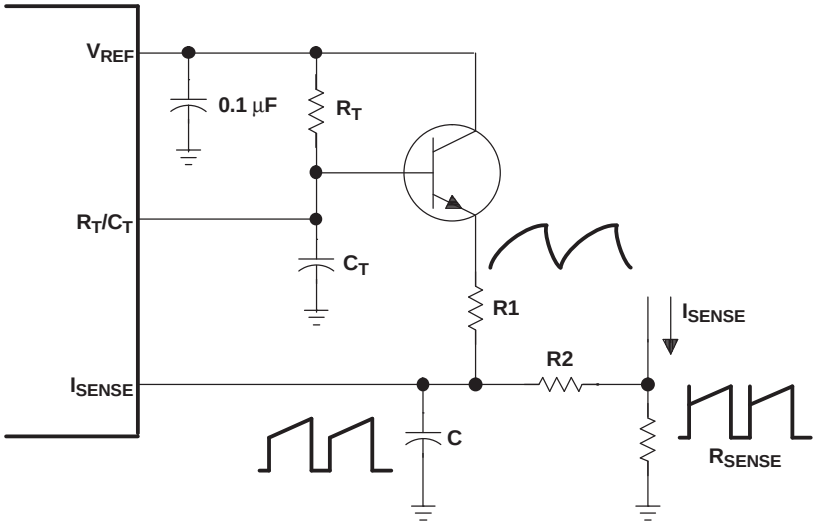

Figure 6. Slope Compensation

PACKAGING INFORMATION

Orderable Device	Status (1)	Package Type	Package Drawing	Pins	Package Qty	Eco Plan (2)	Lead/Ball Finish (6)	MSL Peak Temp (3)	Op Temp (°C)	Device Marking (4/5)	Samples
TL2842BD	ACTIVE	SOIC	D	14	50	Green (RoHS & no Sb/Br)	NIPDAU	Level-1-260C-UNLIM	-40 to 85	TL2842B	Samples
TL2842BD-8	ACTIVE	SOIC	D	8	75	Green (RoHS & no Sb/Br)	NIPDAU	Level-1-260C-UNLIM	-40 to 85	2842B	Samples
TL2842BDR	ACTIVE	SOIC	D	14	2500	Green (RoHS & no Sb/Br)	NIPDAU	Level-1-260C-UNLIM	-40 to 85	TL2842B	Samples
TL2842BDR-8	ACTIVE	SOIC	D	8	2500	Green (RoHS & no Sb/Br)	NIPDAU	Level-1-260C-UNLIM	-40 to 85	2842B	Samples
TL2842BP	ACTIVE	PDIP	P	8	50	Green (RoHS & no Sb/Br)	NIPDAU	N / A for Pkg Type	-40 to 85	TL2842BP	Samples
TL2843BD	ACTIVE	SOIC	D	14	50	Green (RoHS & no Sb/Br)	NIPDAU	Level-1-260C-UNLIM	-40 to 85	TL2843B	Samples
TL2843BD-8	ACTIVE	SOIC	D	8	75	Green (RoHS & no Sb/Br)	NIPDAU	Level-1-260C-UNLIM	-40 to 85	2843B	Samples
TL2843BDR	ACTIVE	SOIC	D	14	2500	Green (RoHS & no Sb/Br)	NIPDAU	Level-1-260C-UNLIM	-40 to 85	TL2843B	Samples
TL2843BDR-8	ACTIVE	SOIC	D	8	2500	Green (RoHS & no Sb/Br)	NIPDAU	Level-1-260C-UNLIM	-40 to 85	2843B	Samples
TL2843BDRG4-8	ACTIVE	SOIC	D	8	2500	Green (RoHS & no Sb/Br)	NIPDAU	Level-1-260C-UNLIM	-40 to 85	2843B	Samples
TL2843BP	ACTIVE	PDIP	P	8	50	Green (RoHS & no Sb/Br)	NIPDAU	N / A for Pkg Type	-40 to 85	TL2843BP	Samples
TL2844BD-8	ACTIVE	SOIC	D	8	75	Green (RoHS & no Sb/Br)	NIPDAU	Level-1-260C-UNLIM	-40 to 85	2844B	Samples
TL2844BDR	ACTIVE	SOIC	D	14	2500	Green (RoHS & no Sb/Br)	NIPDAU	Level-1-260C-UNLIM	-40 to 85	TL2844B	Samples
TL2844BDR-8	ACTIVE	SOIC	D	8	2500	Green (RoHS & no Sb/Br)	NIPDAU	Level-1-260C-UNLIM	-40 to 85	2844B	Samples
TL2844BDRG4-8	ACTIVE	SOIC	D	8	2500	Green (RoHS & no Sb/Br)	NIPDAU	Level-1-260C-UNLIM	-40 to 85	2844B	Samples
TL2845BD	ACTIVE	SOIC	D	14	50	Green (RoHS & no Sb/Br)	NIPDAU	Level-1-260C-UNLIM	-40 to 85	TL2845B	Samples
TL2845BD-8	ACTIVE	SOIC	D	8	75	Green (RoHS & no Sb/Br)	NIPDAU	Level-1-260C-UNLIM	-40 to 85	2845B	Samples

Orderable Device	Status (1)	Package Type	Package Drawing	Pins	Package Qty	Eco Plan (2)	Lead/Ball Finish (6)	MSL Peak Temp (3)	Op Temp (°C)	Device Marking (4/5)	Samples
TL2845BDR	ACTIVE	SOIC	D	14	2500	Green (RoHS & no Sb/Br)	NIPDAU	Level-1-260C-UNLIM	-40 to 85	TL2845B	Samples
TL2845BDR-8	ACTIVE	SOIC	D	8	2500	Green (RoHS & no Sb/Br)	NIPDAU	Level-1-260C-UNLIM	-40 to 85	2845B	Samples
TL2845BDRG4-8	ACTIVE	SOIC	D	8	2500	Green (RoHS & no Sb/Br)	NIPDAU	Level-1-260C-UNLIM	-40 to 85	2845B	Samples
TL3842BD	ACTIVE	SOIC	D	14	50	Green (RoHS & no Sb/Br)	NIPDAU	Level-1-260C-UNLIM	0 to 70	TL3842B	Samples
TL3842BD-8	ACTIVE	SOIC	D	8	75	Green (RoHS & no Sb/Br)	NIPDAU	Level-1-260C-UNLIM	0 to 70	3842B	Samples
TL3842BDR	ACTIVE	SOIC	D	14	2500	Green (RoHS & no Sb/Br)	NIPDAU	Level-1-260C-UNLIM	0 to 70	TL3842B	Samples
TL3842BDR-8	ACTIVE	SOIC	D	8	2500	Green (RoHS & no Sb/Br)	NIPDAU	Level-1-260C-UNLIM	0 to 70	3842B	Samples
TL3842BP	ACTIVE	PDIP	P	8	50	Green (RoHS & no Sb/Br)	NIPDAU	N / A for Pkg Type	0 to 70	TL3842BP	Samples
TL3843BD	ACTIVE	SOIC	D	14	50	Green (RoHS & no Sb/Br)	NIPDAU	Level-1-260C-UNLIM	0 to 70	TL3843B	Samples
TL3843BD-8	ACTIVE	SOIC	D	8	75	Green (RoHS & no Sb/Br)	NIPDAU	Level-1-260C-UNLIM	0 to 70	3843B	Samples
TL3843BDR	ACTIVE	SOIC	D	14	2500	Green (RoHS & no Sb/Br)	NIPDAU	Level-1-260C-UNLIM	0 to 70	TL3843B	Samples
TL3843BDR-8	ACTIVE	SOIC	D	8	2500	Green (RoHS & no Sb/Br)	NIPDAU	Level-1-260C-UNLIM	0 to 70	3843B	Samples
TL3843BDRG4	ACTIVE	SOIC	D	14	2500	Green (RoHS & no Sb/Br)	NIPDAU	Level-1-260C-UNLIM	0 to 70	TL3843B	Samples
TL3843BP	ACTIVE	PDIP	P	8	50	Green (RoHS & no Sb/Br)	NIPDAU	N / A for Pkg Type	0 to 70	TL3843BP	Samples
TL3844BD-8	ACTIVE	SOIC	D	8	75	Green (RoHS & no Sb/Br)	NIPDAU	Level-1-260C-UNLIM	0 to 70	3844B	Samples
TL3844BDR	ACTIVE	SOIC	D	14	2500	Green (RoHS & no Sb/Br)	NIPDAU	Level-1-260C-UNLIM	0 to 70	TL3844B	Samples
TL3844BDR-8	ACTIVE	SOIC	D	8	2500	Green (RoHS & no Sb/Br)	NIPDAU	Level-1-260C-UNLIM	0 to 70	3844B	Samples
TL3844BP	ACTIVE	PDIP	P	8	50	Green (RoHS & no Sb/Br)	NIPDAU	N / A for Pkg Type	0 to 70	TL3844BP	Samples

Orderable Device	Status (1)	Package Type	Package Drawing	Pins	Package Qty	Eco Plan (2)	Lead/Ball Finish (6)	MSL Peak Temp (3)	Op Temp (°C)	Device Marking (4/5)	Samples
TL3845BD	ACTIVE	SOIC	D	14	50	Green (RoHS & no Sb/Br)	NIPDAU	Level-1-260C-UNLIM	0 to 70	TL3845B	Samples
TL3845BD-8	ACTIVE	SOIC	D	8	75	Green (RoHS & no Sb/Br)	NIPDAU	Level-1-260C-UNLIM	0 to 70	3845B	Samples
TL3845BDR	ACTIVE	SOIC	D	14	2500	Green (RoHS & no Sb/Br)	NIPDAU	Level-1-260C-UNLIM	0 to 70	TL3845B	Samples
TL3845BDR-8	ACTIVE	SOIC	D	8	2500	Green (RoHS & no Sb/Br)	NIPDAU	Level-1-260C-UNLIM	0 to 70	3845B	Samples
TL3845BP	ACTIVE	PDIP	P	8	50	Green (RoHS & no Sb/Br)	NIPDAU	N / A for Pkg Type	0 to 70	TL3845BP	Samples

(1) The marketing status values are defined as follows:
ACTIVE: Product device recommended for new designs.
LIFEBUY: TI has announced that the device will be discontinued, and a lifetime-buy period is in effect.
NRND: Not recommended for new designs. Device is in production to support existing customers, but TI does not recommend using this part in a new design.
PREVIEW: Device has been announced but is not in production. Samples may or may not be available.
OBSOLETE: TI has discontinued the production of the device.

(2) **RoHS:** TI defines "RoHS" to mean semiconductor products that are compliant with the current EU RoHS requirements for all 10 RoHS substances, including the requirement that RoHS substance do not exceed 0.1% by weight in homogeneous materials. Where designed to be soldered at high temperatures, "RoHS" products are suitable for use in specified lead-free processes. TI may reference these types of products as "Pb-Free".
RoHS Exempt: TI defines "RoHS Exempt" to mean products that contain lead but are compliant with EU RoHS pursuant to a specific EU RoHS exemption.
Green: TI defines "Green" to mean the content of Chlorine (Cl) and Bromine (Br) based flame retardants meet JS709B low halogen requirements of <=1000ppm threshold. Antimony trioxide based flame retardants must also meet the <=1000ppm threshold requirement.

(3) MSL, Peak Temp. - The Moisture Sensitivity Level rating according to the JEDEC industry standard classifications, and peak solder temperature.

(4) There may be additional marking, which relates to the logo, the lot trace code information, or the environmental category on the device.

(5) Multiple Device Markings will be inside parentheses. Only one Device Marking contained in parentheses and separated by a "~" will appear on a device. If a line is indented then it is a continuation of the previous line and the two combined represent the entire Device Marking for that device.

(6) Lead/Ball Finish - Orderable Devices may have multiple material finish options. Finish options are separated by a vertical ruled line. Lead/Ball Finish values may wrap to two lines if the finish value exceeds the maximum column width.

Important Information and Disclaimer: The information provided on this page represents TI's knowledge and belief as of the date that it is provided. TI bases its knowledge and belief on information provided by third parties, and makes no representation or warranty as to the accuracy of such information. Efforts are underway to better integrate information from third parties. TI has taken and

continues to take reasonable steps to provide representative and accurate information but may not have conducted destructive testing or chemical analysis on incoming materials and chemicals. TI and TI suppliers consider certain information to be proprietary, and thus CAS numbers and other limited information may not be available for release.

In no event shall TI's liability arising out of such information exceed the total purchase price of the TI part(s) at issue in this document sold by TI to Customer on an annual basis.

OTHER QUALIFIED VERSIONS OF TL2843B :

- Automotive: TL2843B-Q1

NOTE: Qualified Version Definitions:

- Automotive - Q100 devices qualified for high-reliability automotive applications targeting zero defects

TAPE AND REEL INFORMATION

REEL DIMENSIONS

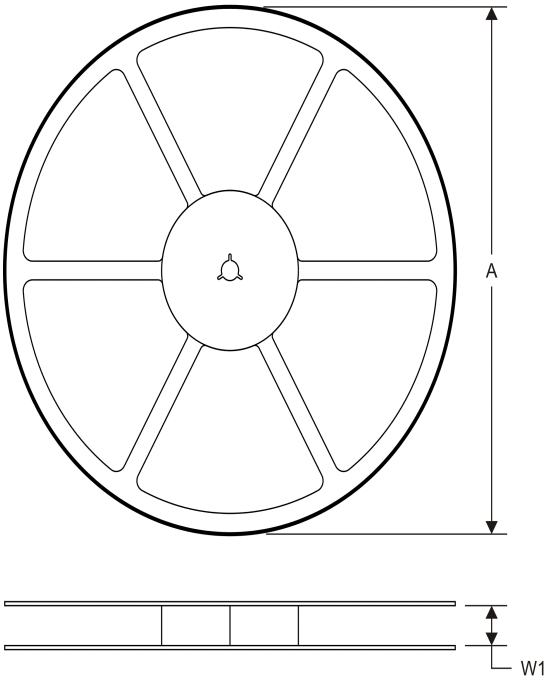

TAPE DIMENSIONS

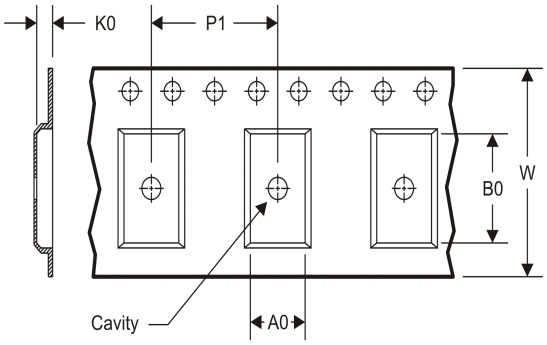

A0	Dimension designed to accommodate the component width
B0	Dimension designed to accommodate the component length
K0	Dimension designed to accommodate the component thickness
W	Overall width of the carrier tape
P1	Pitch between successive cavity centers

TAPE AND REEL INFORMATION

*All dimensions are nominal

Device	Package Type	Package Drawing	Pins	SPQ	Reel Diameter (mm)	Reel Width W1 (mm)	A0 (mm)	B0 (mm)	K0 (mm)	P1 (mm)	W (mm)	Pin1 Quadrant
TL2842BDR	SOIC	D	14	2500	330.0	16.4	6.5	9.0	2.1	8.0	16.0	Q1
TL2842BDR-8	SOIC	D	8	2500	330.0	12.4	6.4	5.2	2.1	8.0	12.0	Q1
TL2843BDR	SOIC	D	14	2500	330.0	16.4	6.5	9.0	2.1	8.0	16.0	Q1
TL2843BDR-8	SOIC	D	8	2500	330.0	12.4	6.4	5.2	2.1	8.0	12.0	Q1
TL2844BDR	SOIC	D	14	2500	330.0	16.4	6.5	9.0	2.1	8.0	16.0	Q1
TL2844BDR-8	SOIC	D	8	2500	330.0	12.4	6.4	5.2	2.1	8.0	12.0	Q1
TL2845BDR	SOIC	D	14	2500	330.0	16.4	6.5	9.0	2.1	8.0	16.0	Q1
TL2845BDR-8	SOIC	D	8	2500	330.0	12.4	6.4	5.2	2.1	8.0	12.0	Q1
TL3842BDR	SOIC	D	14	2500	330.0	16.4	6.5	9.0	2.1	8.0	16.0	Q1
TL3842BDR-8	SOIC	D	8	2500	330.0	12.4	6.4	5.2	2.1	8.0	12.0	Q1
TL3843BDR	SOIC	D	14	2500	330.0	16.4	6.5	9.0	2.1	8.0	16.0	Q1
TL3843BDR-8	SOIC	D	8	2500	330.0	12.4	6.4	5.2	2.1	8.0	12.0	Q1
TL3844BDR	SOIC	D	14	2500	330.0	16.4	6.5	9.0	2.1	8.0	16.0	Q1
TL3844BDR-8	SOIC	D	8	2500	330.0	12.4	6.4	5.2	2.1	8.0	12.0	Q1
TL3845BDR	SOIC	D	14	2500	330.0	16.4	6.5	9.0	2.1	8.0	16.0	Q1
TL3845BDR-8	SOIC	D	8	2500	330.0	12.4	6.4	5.2	2.1	8.0	12.0	Q1

TAPE AND REEL BOX DIMENSIONS

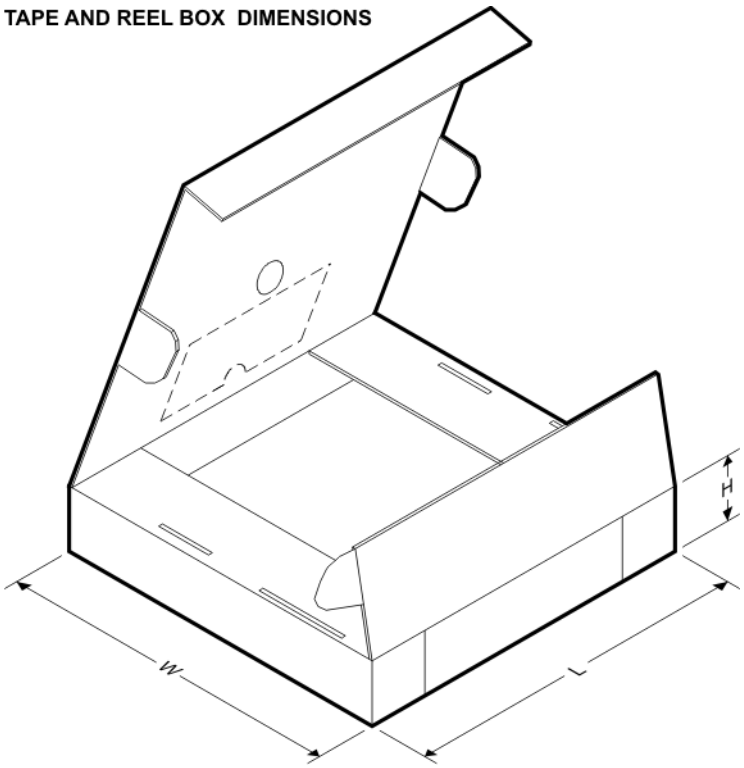

*All dimensions are nominal

Device	Package Type	Package Drawing	Pins	SPQ	Length (mm)	Width (mm)	Height (mm)
TL2842BDR	SOIC	D	14	2500	367.0	367.0	38.0
TL2842BDR-8	SOIC	D	8	2500	340.5	338.1	20.6
TL2843BDR	SOIC	D	14	2500	367.0	367.0	38.0
TL2843BDR-8	SOIC	D	8	2500	340.5	338.1	20.6
TL2844BDR	SOIC	D	14	2500	367.0	367.0	38.0
TL2844BDR-8	SOIC	D	8	2500	340.5	338.1	20.6
TL2845BDR	SOIC	D	14	2500	367.0	367.0	38.0
TL2845BDR-8	SOIC	D	8	2500	340.5	338.1	20.6
TL3842BDR	SOIC	D	14	2500	367.0	367.0	38.0
TL3842BDR-8	SOIC	D	8	2500	340.5	338.1	20.6
TL3843BDR	SOIC	D	14	2500	367.0	367.0	38.0
TL3843BDR-8	SOIC	D	8	2500	340.5	338.1	20.6
TL3844BDR	SOIC	D	14	2500	367.0	367.0	38.0
TL3844BDR-8	SOIC	D	8	2500	340.5	338.1	20.6
TL3845BDR	SOIC	D	14	2500	367.0	367.0	38.0
TL3845BDR-8	SOIC	D	8	2500	340.5	338.1	20.6

D (R–PDSO–G14) PLASTIC SMALL OUTLINE

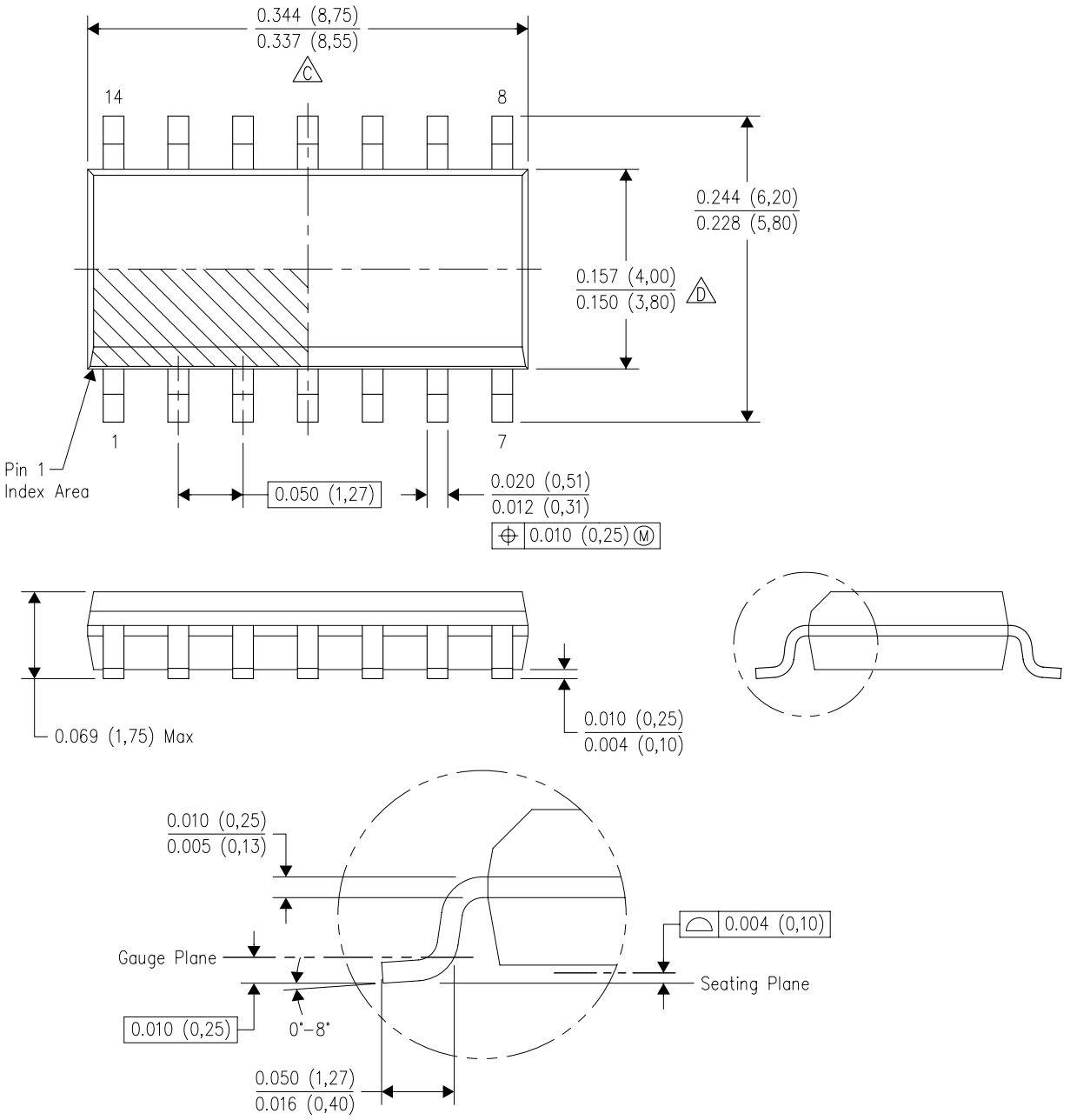

4040047–5/M 06/11

NOTES:
A. All linear dimensions are in inches (millimeters).
B. This drawing is subject to change without notice.
C. Body length does not include mold flash, protrusions, or gate burrs. Mold flash, protrusions, or gate burrs shall not exceed 0.006 (0,15) each side.
D. Body width does not include interlead flash. Interlead flash shall not exceed 0.017 (0,43) each side.
E. Reference JEDEC MS–012 variation AB.

D (R–PDSO–G14) PLASTIC SMALL OUTLINE

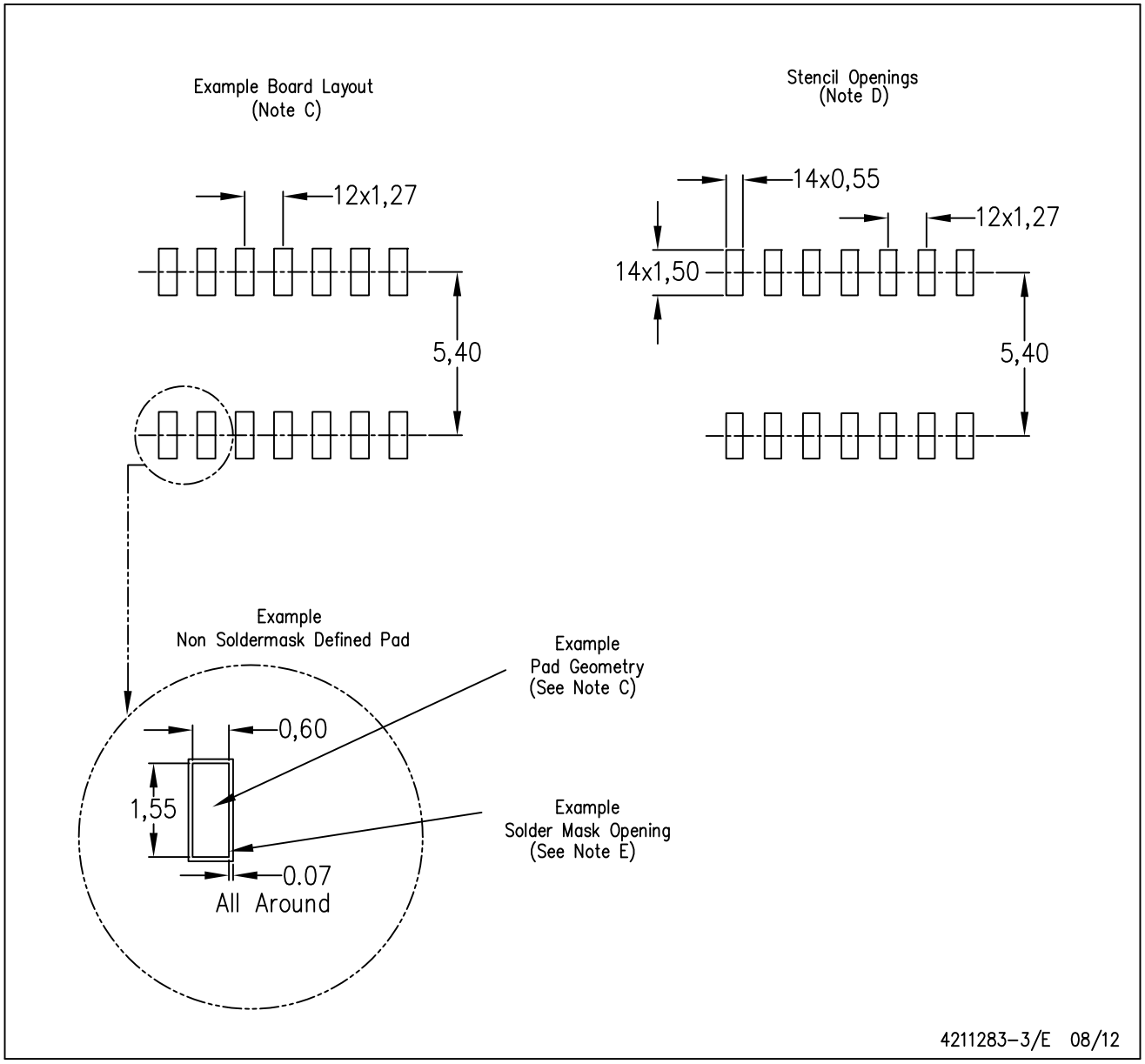

NOTES:
A. All linear dimensions are in millimeters.
B. This drawing is subject to change without notice.
C. Publication IPC–7351 is recommended for alternate designs.
D. Laser cutting apertures with trapezoidal walls and also rounding corners will offer better paste release. Customers should contact their board assembly site for stencil design recommendations. Refer to IPC–7525 for other stencil recommendations.
E. Customers should contact their board fabrication site for solder mask tolerances between and around signal pads.

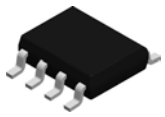

PACKAGE OUTLINE

D0008A

SOIC - 1.75 mm max height

SMALL OUTLINE INTEGRATED CIRCUIT

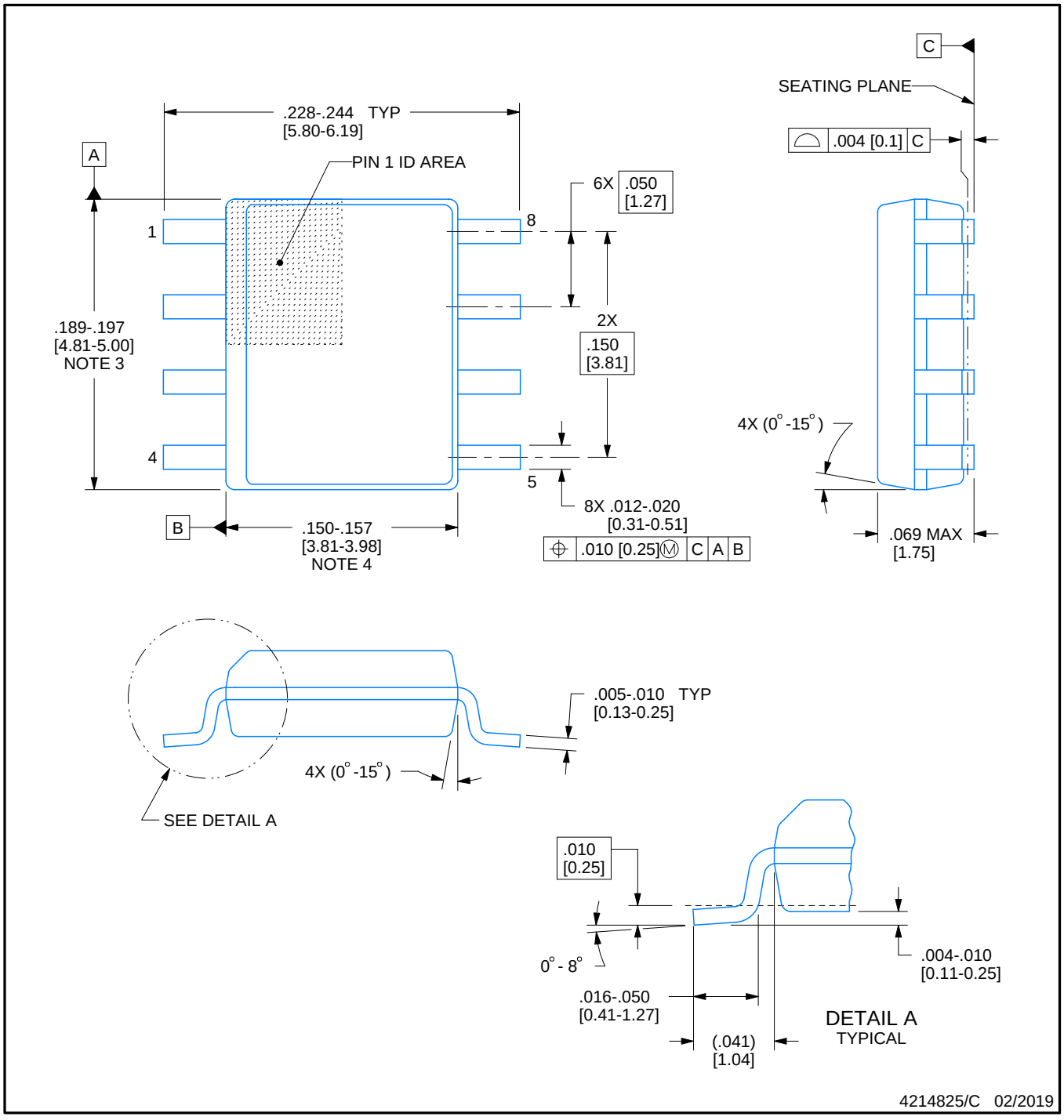

NOTES:

1. Linear dimensions are in inches [millimeters]. Dimensions in parenthesis are for reference only. Controlling dimensions are in inches. Dimensioning and tolerancing per ASME Y14.5M.
2. This drawing is subject to change without notice.
3. This dimension does not include mold flash, protrusions, or gate burrs. Mold flash, protrusions, or gate burrs shall not exceed .006 [0.15] per side.
4. This dimension does not include interlead flash.
5. Reference JEDEC registration MS-012, variation AA.

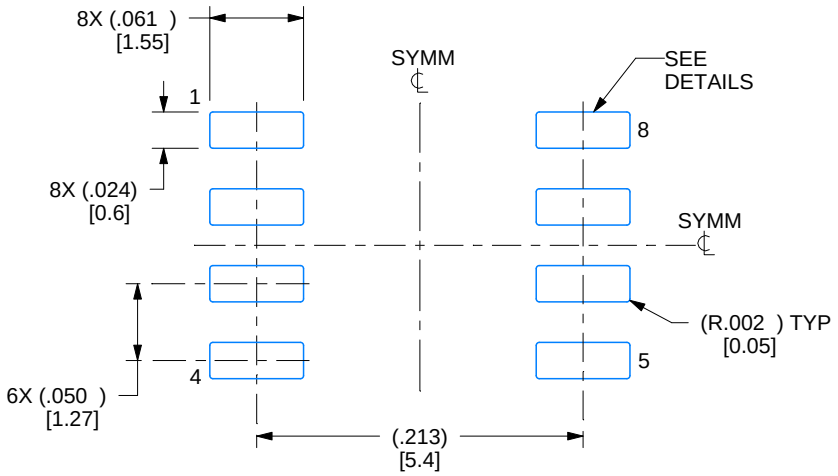

LAND PATTERN EXAMPLE
EXPOSED METAL SHOWN
SCALE:8X

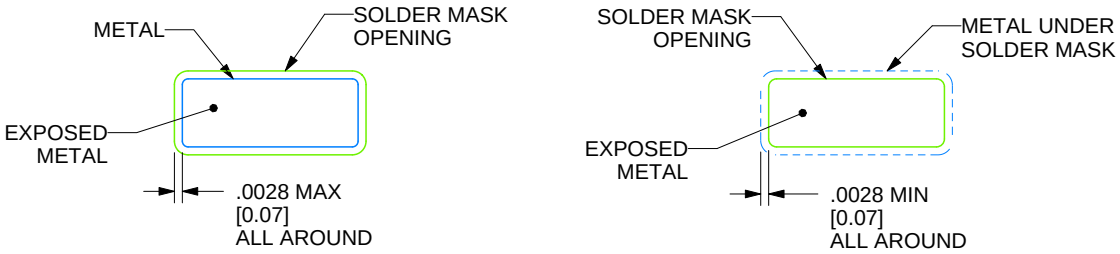

SOLDER MASK DETAILS

4214825/C 02/2019

NOTES: (continued)

6. Publication IPC-7351 may have alternate designs.
7. Solder mask tolerances between and around signal pads can vary based on board fabrication site.

EXAMPLE STENCIL DESIGN

D0008A

SOIC - 1.75 mm max height

SMALL OUTLINE INTEGRATED CIRCUIT

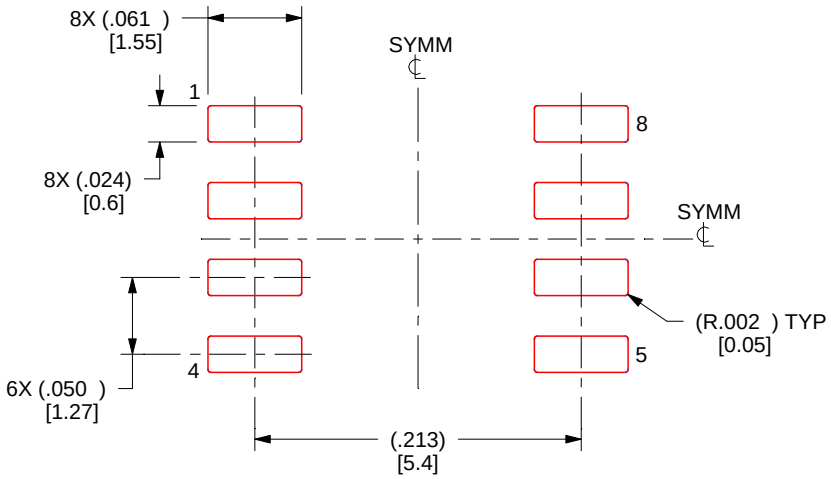

SOLDER PASTE EXAMPLE
BASED ON .005 INCH [0.125 MM] THICK STENCIL
SCALE:8X

4214825/C 02/2019

NOTES: (continued)

8. Laser cutting apertures with trapezoidal walls and rounded corners may offer better paste release. IPC-7525 may have alternate design recommendations.
9. Board assembly site may have different recommendations for stencil design.

P (R–PDIP–T8) PLASTIC DUAL–IN–LINE PACKAGE

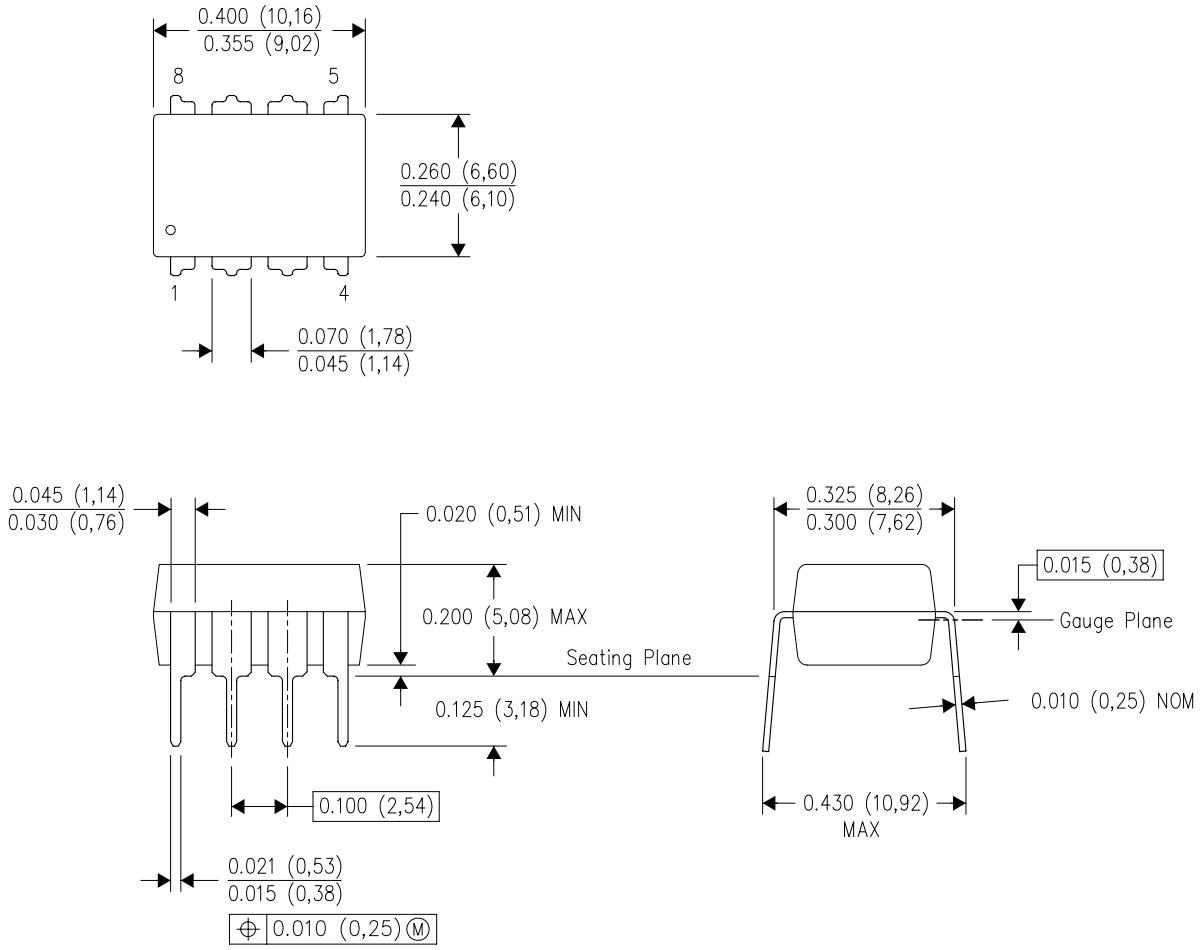

NOTES:
A. All linear dimensions are in inches (millimeters).
B. This drawing is subject to change without notice.
C. Falls within JEDEC MS–001 variation BA.

IMPORTANT NOTICE AND DISCLAIMER

TI PROVIDES TECHNICAL AND RELIABILITY DATA (INCLUDING DATASHEETS), DESIGN RESOURCES (INCLUDING REFERENCE DESIGNS), APPLICATION OR OTHER DESIGN ADVICE, WEB TOOLS, SAFETY INFORMATION, AND OTHER RESOURCES “AS IS” AND WITH ALL FAULTS, AND DISCLAIMS ALL WARRANTIES, EXPRESS AND IMPLIED, INCLUDING WITHOUT LIMITATION ANY IMPLIED WARRANTIES OF MERCHANTABILITY, FITNESS FOR A PARTICULAR PURPOSE OR NON-INFRINGEMENT OF THIRD PARTY INTELLECTUAL PROPERTY RIGHTS.

These resources are intended for skilled developers designing with TI products. You are solely responsible for (1) selecting the appropriate TI products for your application, (2) designing, validating and testing your application, and (3) ensuring your application meets applicable standards, and any other safety, security, or other requirements. These resources are subject to change without notice. TI grants you permission to use these resources only for development of an application that uses the TI products described in the resource. Other reproduction and display of these resources is prohibited. No license is granted to any other TI intellectual property right or to any third party intellectual property right. TI disclaims responsibility for, and you will fully indemnify TI and its representatives against, any claims, damages, costs, losses, and liabilities arising out of your use of these resources.

TI’s products are provided subject to TI’s Terms of Sale (www.ti.com/legal/termsofsale.html) or other applicable terms available either on ti.com or provided in conjunction with such TI products. TI’s provision of these resources does not expand or otherwise alter TI’s applicable warranties or warranty disclaimers for TI products.

Mailing Address: Texas Instruments, Post Office Box 655303, Dallas, Texas 75265
Copyright © 2020, Texas Instruments Incorporated