Low-Power Audio Codec With Audio Procsessing and Stereo Class-D Speaker Amplifier

Check for Samples: TLV320AIC3110

1 INTRODUCTION

1.1 Features

- **Stereo Audio DAC With 95-dB SNR**
- **Mono Audio ADC With 91-dB SNR**
- **Supports 8-kHz to 192-kHz Separate DAC and ADC Sample Rates**
- **Stereo 1.29-W Class-D BTL 8-Ω Speaker Driver With Direct Battery Connection**
- **One Differential and Three Single-Ended Inputs With Mixing and Level Controls**
- **Microphone With Bias, Preamp PGA, and AGC**
- **Built-in Digital Audio Processing Blocks (PRB) With User-Programmable Biquad, FIR Filters, and DRC**
- **Digital Mixing Capability**
- **Programmable Digital Audio Processor for Bass Boost/Treble/EQ With up to Five Biquads for Record and up to Six Biquads for Playback**
- **Pin Control or Register Control for Digital-Playback Volume-Control Settings**
- **Digital Sine-Wave Generator for Beeps and Key-Clicks**
- **Integrated PLL Used for Programmable Digital Audio Processor**
- **I^2S, Left-Justified, Right-Justified, DSP, and TDM Audio Interfaces**
- **I^2C Control With Register Auto-Increment**
- **Full Power-Down Control**
- **Power Supplies:**
  - **Analog: 2.7 V–3.6 V**
  - **Digital Core: 1.65 V–1.95 V**
  - **Digital I/O: 1.1 V–3.6 V**
  - **Class-D: 2.7 V–5.5 V (SPLVDD and SPRVDD ≥ AVDD)**
- **5-mm × 5-mm 32-QFN Package**

1.2 Applications

- **Portable Audio Devices**
- **Mobile Internet Devices**
- **e-Books**

1.3 Description

The TLV320AIC3110 is a low-power, highly integrated, high-performance codec which supports stereo audio DAC, and mono audio ADC.

The TLV320AIC3110 features a high-performance audio codec with 24-bit stereo playback and monaural record functionality. The device integrates several analog features, such as a microphone interface, headphone drivers, and speaker drivers. The digital audio data format is programmable to work with popular audio standard protocols (I^2S, left/right-justified) in master, slave, DSP, and TDM modes. Bass boost, treble, or EQ can be supported by the programmable digital-signal processing blocks (PRB). An on-chip PLL provides the high-speed clock needed by the digital-signal processing block. The volume level can be controlled either by pin control or by register control. The audio functions are controlled using the I^2C serial bus.

The TLV320AIC3110 has a programmable digital sine-wave generator and is available in a 32-pin QFN package.

Please be aware that an important notice concerning availability, standard warranty, and use in critical applications of Texas Instruments semiconductor products and disclaimers thereto appears at the end of this data sheet.

MATLAB is a trademark of The MathWorks, Inc.
All other trademarks are the property of their respective owners.

PRODUCTION DATA information is current as of publication date. Products conform to specifications per the terms of the Texas Instruments standard warranty. Production processing does not necessarily include testing of all parameters.

Copyright © 2009, Texas Instruments Incorporated

This integrated circuit can be damaged by ESD. Texas Instruments recommends that all integrated circuits be handled with appropriate precautions. Failure to observe proper handling and installation procedures can cause damage.

ESD damage can range from subtle performance degradation to complete device failure. Precision integrated circuits may be more susceptible to damage because very small parametric changes could cause the device not to meet its published specifications.

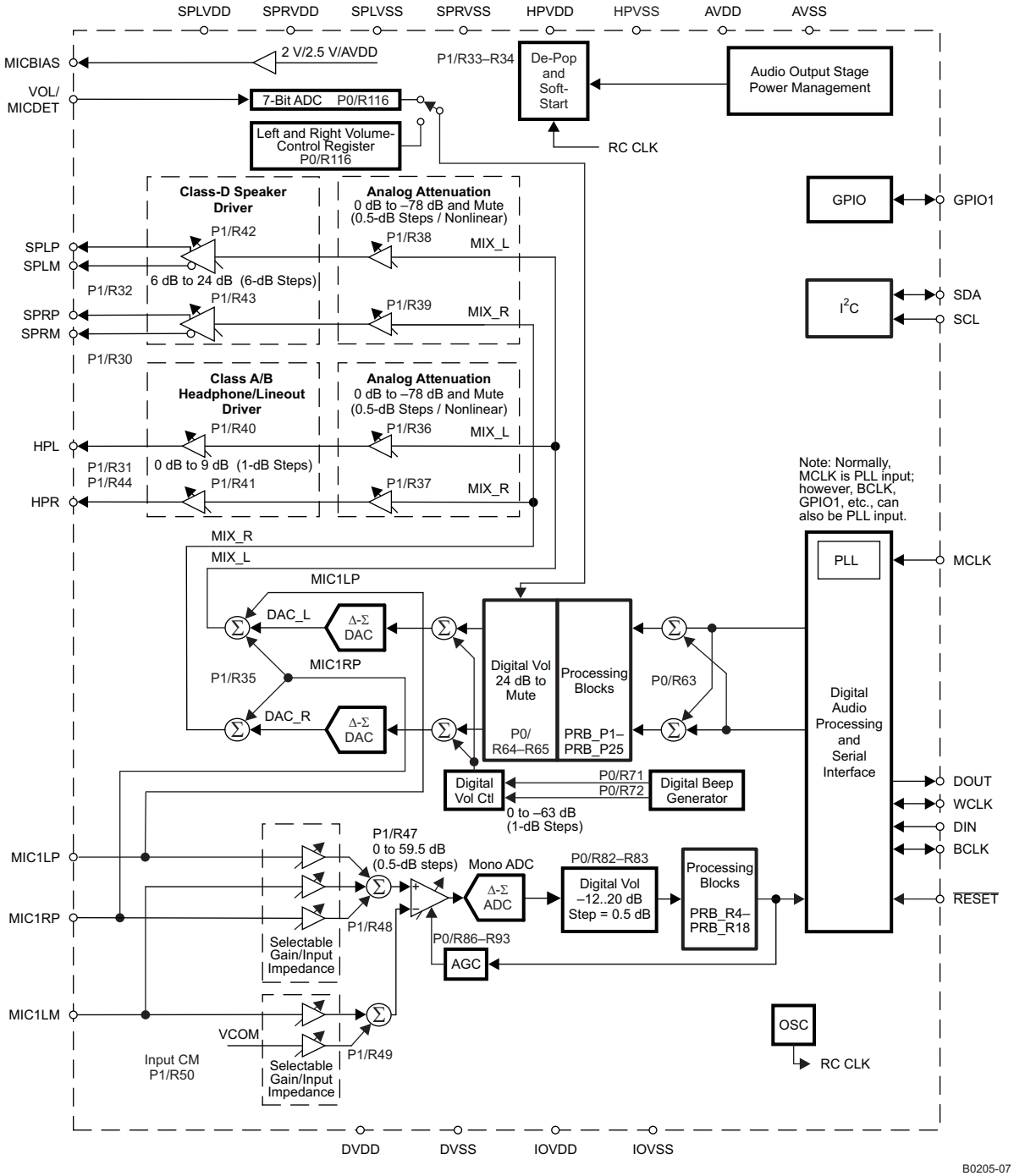

Figure 1-1. Functional Block Diagram

Copyright © 2009, Texas Instruments Incorporated

NOTE

This data manual is designed using PDF document-viewing features that allow quick access to information. For example, performing a global search on "page 0 / register 27" produces all references to this page and register in a list. This makes is easy to traverse the list and find all information related to a page and register. Note that the search string must be of the indicated format. Also, this document includes document hyperlinks to allow the user to quickly find a document reference. To come back to the original page, click the green left arrow near the PDF page number at the bottom of the file. The hot-key for this function is alt-left arrow on the keyboard. Another way to find information quickly is to use the PDF bookmarks.

Copyright © 2009, Texas Instruments Incorporated

2 PACKAGE AND SIGNAL DESCRIPTIONS

2.1 Package/Ordering Information

PRODUCT	PACKAGE	PACKAGE DESIGNATOR	OPERATING TEMPERATURE RANGE	ORDERING NUMBER	TRANSPORT MEDIA, QUANTITY
TLV320AIC3110	QFN-32	RHB	–40°C to 85°C	TLV320AIC3110IRHBT	Tape and reel, 250
				TLV320AIC3110IRHBR	Tape and reel, 3000

2.2 Device Information

RHB Package
(Top View)

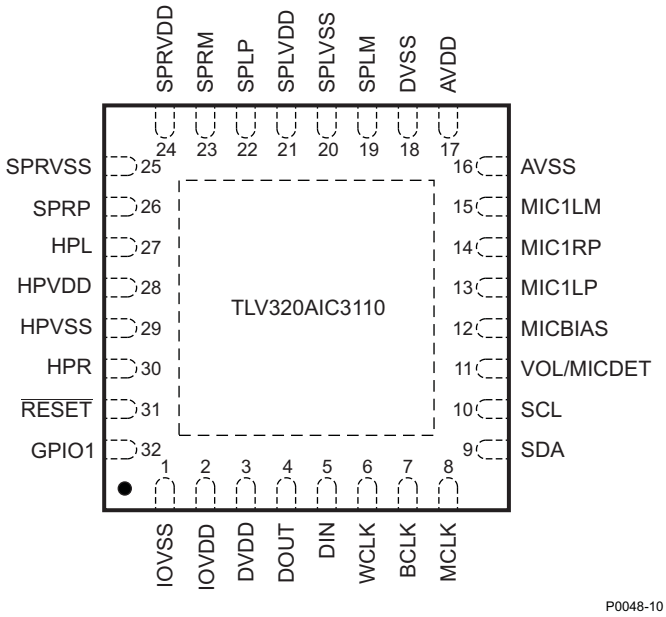

P0048-10

Table 2-1. TERMINAL FUNCTIONS

TERMINAL		I/O	DESCRIPTION
NAME	NO.		
AVDD	17	–	Analog power supply
AVSS	16	–	Analog ground
BCLK	7	I/O	Audio serial bit clock
DIN	5	I	Audio serial data input
DOUT	4	O	Audio serial data output
DVDD	3	–	Digital power – digital core
DVSS	18	–	Digital ground
GPIO1	32	I/O	General-purpose input/output and multifunction pin
HPL	27	O	Left-channel headphone/line driver output
HPR	30	O	Right-channel headphone/line driver output
HPVDD	28	–	Headphone/line driver and PLL power
HPVSS	29	–	Headphone/line driver and PLL ground
IOVDD	2	–	Interface power
IOVSS	1	–	Interface ground
MCLK	8	I	External master clock

Copyright © 2009, Texas Instruments Incorporated

TERMINAL FUNCTIONS (continued)

TERMINAL		I/O	DESCRIPTION
NAME	NO.		
MICBIAS	12	O	Micophone bias voltage
MIC1LM	15	I	Microphone/line input routed to M or P input mixer
MIC1LP	13	I	Microphone/line input routed to P input mixer and left output mixer
MIC1RP	14	I	Microphone/line input routed to P input mixer and left/right output mixer
$\overline{\text{RESET}}$	31	I	Device reset
SCL	10	I/O	I^2C control bus clock input
SDA	9	I/O	I^2C control bus data input
SPLM	19	O	Left-channel class-D speaker-driver inverting output
SPLP	22	O	Left-channel class-D speaker-driver noninverting output
SPLVDD	21	–	Left-channel class-D speaker-driver power supply
SPLVSS	20	–	Left-channel class-D speaker-driver power supply ground
SPRM	23	O	Right-channel class-D speaker-driver inverting output
SPRP	26	O	Right-channel class-D speaker-driver noninverting output
SPRVDD	24	–	Right-channel class-D speaker-driver power supply
SPRVSS	25	–	Right-channel class-D speaker-driver power-supply ground
VOL/MICDET	11	I	Volume control or microphone detection
WCLK	6	I/O	Audio serial word clock

3 ELECTRICAL SPECIFICATIONS

3.1 Absolute Maximum Ratings

over operating free-air temperature range (unless otherwise noted) (1)

	VALUE	UNIT
AVDD to AVSS	–0.3 to 3.9	V
DVDD to DVSS	–0.3 to 2.5	V
HPVDD to HPVSS	–0.3 to 3.9	V
SPLVDD to SPLVSS	–0.3 to 6	V
SPRVDD to SPRVSS	–0.3 to 6	V
IOVDD to IOVSS	–0.3 to 3.9	V
Digital input voltage	IOVSS – 0.3 to IOVDD + 0.3	V
Analog input voltage	AVSS – 0.3 to AVDD + 0.3	V
Operating temperature range	–40 to 85	°C
Storage temperature range	–55 to 150	°C
Junction temperature (T_J Max)	105	°C
Power dissipation	$(T_J \text{ Max} – T_A)/R_{\theta JA}$	W
Thermal impedance (with thermal pad soldered to board), $R_{\theta JA}$	35	°C/W

(1) Stresses beyond those listed under *Absolute Maximum Ratings* may cause permanent damage to the device. These are stress ratings only, and functional operation of the device at these or any other conditions beyond those indicated under *Recommended Operating Conditions* is not implied. Exposure to absolute-maximum-rated conditions for extended periods may affect device reliability.

Table 3-1. System Thermal Characteristics(1)

Power Rating at 25°C	Derating Factor	Power Rating at 70°C	Power Rating at 85°C
2.3 W	28.57 mW/°C	1 W	0.6 W

(1) This data was taken using 2-oz. (0.071-mm thick) trace and copper pad that is soldered to a JEDEC high-K, standard 4-layer 3-in. × 3-in. (7.62-cm × 7.62-cm) PCB.

Copyright © 2009, Texas Instruments Incorporated

3.2 Recommended Operating Conditions

over operating free-air temperature range (unless otherwise noted)

			MIN	NOM	MAX	UNIT
AVDD[1]	Power-supply voltage range	Referenced to AVSS[2]	2.7	3.3	3.6	V
DVDD		Referenced to DVSS[2]	1.65	1.8	1.95	
HPVDD		Referenced to HPVSS[2]	2.7	3.3	3.6	
SPLVDD[1]		Referenced to SPLVSS[2]	2.7		5.5	
SPRVDD[1]		Referenced to SPRVSS[2]	2.7		5.5	
IOVDD		Referenced to IOVSS[2]	1.1	3.3	3.6	
	Speaker impedance	Resistance applied across class-D output pins (BTL)	8			Ω
	Headphone impedance	AC-coupled to R_L	16			Ω
V_I	Analog audio full-scale input voltage	AVDD = 3.3 V, single-ended		0.707		V_{RMS}
	Stereo line-output load impedance	AC-coupled to R_L		10		kΩ
MCLK[3]	Master clock frequency	IOVDD = 3.3 V			50	MHz
SCL	SCL clock frequency				400	kHz
T_A	Operating free-air temperature		–40		85	°C

(1) To minimize battery-current leakage, the SPLVDD and SPRVDD voltage levels should not be below the AVDD voltage level.
(2) All grounds on board are tied together, so they should not differ in voltage by more than 0.2 V maximum for any combination of ground signals. By use of a wide trace or ground plane, ensure a low-impedance connection between HPVSS and DVSS.
(3) The maximum input frequency should be 50 MHz for any digital pin used as a general-purpose clock.

3.3 Electrical Characteristics

At 25°C, AVDD = HPVDD = IOVDD = 3.3 V, SPLVDD = SPRVDD = 3.6 V; DVDD = 1.8 V; f_S (audio) = 48 kHz; CODEC_CLKIN = 256 × f_S; PLL = Off; VOL/MICDET pin disabled (unless otherwise noted)

PARAMETER	TEST CONDITIONS	MIN	TYP	MAX	UNIT
INTERNAL OSCILLATOR—RC_CLK					
Oscillator frequency			8.2		MHz
VOLUME CONTROL PIN (ADC); VOL/MICDET Pin Enabled					
Input voltage range	VOL/MICDET pin configured as volume control (page 0 / register 116, bit D7 = 1 and page 0 / register 67, bit D7 = 0)	0		0.5 × AVDD	V
Input capacitance			2		pF
Volume control steps			128		Steps

Copyright © 2009, Texas Instruments Incorporated

Electrical Characteristics *(continued)*

At 25°C, AVDD = HPVDD = IOVDD = 3.3 V, SPLVDD = SPRVDD = 3.6 V; DVDD = 1.8 V; f_S (audio) = 48 kHz; CODEC_CLKIN = 256 × f_S; PLL = Off; VOL/MICDET pin disabled (unless otherwise noted)

PARAMETER		TEST CONDITIONS	MIN	TYP	MAX	UNIT
AUDIO ADC						
Microphone Input to ADC, 984-Hz Sine-Wave Input, f_S = 48 kHz, AGC = OFF						
	Input signal level (0-dB)	MIC with R1 = 20 kΩ (page 1 / register 48 and register 49, bits D7–D6)		0.707		V_{RMS}
SNR	Signal-to-noise ratio	f_S = 48 kHz, 0-dB PGA gain, MIC input ac-shorted to ground; measured as idle-channel noise, A-weighted (1) (2)	80	91		dB
	Dynamic range	f_S = 48 kHz, 0-dB PGA gain, MIC input 1 kHz at –60-dBFS input applied, referenced to 0.707-Vrms input, A-weighted (1) (2)		91		dB
THD+N	Total harmonic distortion + noise	f_S = 48 kHz, 0-dB PGA gain, MIC input 1 kHz at –2 dBFS input applied, referenced to 0.707 Vrms input		–85	–70	dB
THD	Total harmonic distortion	f_S = 48 kHz, 0-dB PGA gain, MIC input 1 kHz at –2 dBFS input applied, referenced to 0.707 Vrms input		–91		dB
	Input capacitance	MIC input		2		pF
Microphone Bias						
	Voltage output	Page 1 / register 46, bits D1–D0 = 10	2.25	2.5	2.75	V
		Page 1 / register 46, bits D1–D0 = 01		2		
	Voltage regulation	At 4-mA load current, page 1 / register 46, bits D1–D0 = 10 (MICBIAS = 2.5 V)		5		mV
		At 4-mA load current, page 1 / register 46, bits D1–D0 = 01 (MICBIAS = 2 V)		7		
Audio ADC Digital Decimation Filter Characteristics						
See Section 5.4.4.4 for audio ADC decimation filter characteristics.						
AUDIO DAC						
DAC Headphone Output, AC-Coupled Load = 16 Ω (Single-Ended), Driver Gain = 0 dB, Parasitic Capacitance = 30 pF						
	Full-scale output voltage (0 dB)	Output common-mode setting = 1.65 V		0.707		Vrms
SNR	Signal-to-noise ratio	Measured as idle-channel noise, A-weighted (1) (2)	80	95		dB
THD	Total harmonic distortion	0-dBFS input		–85	–65	dB
THD+N	Total harmonic distortion + noise	0-dBFS input		–82	–60	dB
	Mute attenuation			87		dB
PSRR	Power-supply rejection ratio (3)	Ripple on HPVDD (3.3 V) = 200 mVp-p at 1 kHz		-62		dB
P_O	Maximum output power	R_L = 32 Ω, THD+N ≤ –60 dB		20		mW
		R_L = 16 Ω, THD+N ≤ –60 dB		60		
DAC Lineout (HP Driver in Lineout Mode)						
SNR	Signal-to-noise ratio	Measured as idle-channel noise, A-weighted		95		dB
THD	Total harmonic distortion	0-dBFS input, 0-dB gain		–86		dB
THD+N	Total harmonic distortion + noise	0-dBFS input, 0-dB gain		–83		dB
DAC Digital Interpolation Filter Characteristics						
See Section 5.5.1.4 for DAC interpolation filter characteristics.						

(1) Ratio of output level with 1-kHz full-scale sine-wave input, to the output level with the inputs short-circuited, measured A-weighted over a 20-Hz to 20-kHz bandwidth using an audio analyzer.
(2) All performance measurements done with 20-kHz low-pass filter and, where noted, A-weighted filter. Failure to use such a filter may result in higher THD+N and lower SNR and dynamic range readings than shown in the *Electrical Characteristics*. The low-pass filter removes out-of-band noise, which, although not audible, may affect dynamic specification values.
(3) DAC to headphone-out PSRR measurement is calculated as PSRR = 20 × log(ΔV_{HPL} / ΔV_{HPVDD}).

Copyright © 2009, Texas Instruments Incorporated

Electrical Characteristics *(continued)*

At 25°C, AVDD = HPVDD = IOVDD = 3.3 V, SPLVDD = SPRVDD = 3.6 V; DVDD = 1.8 V; f_S (audio) = 48 kHz; CODEC_CLKIN = 256 × f_S; PLL = Off; VOL/MICDET pin disabled (unless otherwise noted)

PARAMETER		TEST CONDITIONS	MIN	TYP	MAX	UNIT
DAC Output to Class-D Speaker Output, Load = 8 Ω (Differential), 50 pF						
	Output voltage	SPLVDD = SPRVDD = 3.6 V, BTL measurement, CM = 1.8 V, DAC input = 0 dBFS, class-D gain = 6 dB, THD ≤ –16.5 dB		2.2		Vrms
		SPLVDD = SPRVDD = 3.6 V, BTL measurement, CM = 1.8 V, DAC input = –2 dBFS, class-D gain = 6 dB, THD ≤ –20 dB		2.1		
	Output, common-mode	SPLVDD = SPRVDD = 3.6 V, BTL measurement, DAC input = mute, class-D gain = 6 dB		1.8		V
SNR	Signal-to-noise ratio	SPLVDD = SPRVDD = 3.6 V, BTL measurement, class-D gain = 6 dB, measured as idle-channel noise, A-weighted (with respect to full-scale output value of 2.2 Vrms)(1) (2)		87		dB
THD	Total harmonic distortion	SPLVDD = SPRVDD = 3.6 V, BTL measurement, CM = 1.8 V, DAC input = –6 dBFS, class-D gain = 6 dB		–67		dB
THD+N	Total harmonic distortion + noise	SPLVDD = SPRVDD = 3.6 V, BTL measurement, CM = 1.8 V, DAC input = –6 dBFS, class-D gain = 6 dB		–66		dB
PSRR	Power-supply rejection ratio(3)	SPLVDD = SPRVDD = 3.6 V, BTL measurement, ripple on SPLVDD/SPRVDD = 200 mVp-p at 1 kHz		–44		dB
	Mute attenuation			110		dB
P_O	Maximum output power	SPLVDD = SPRVDD = 3.6 V, BTL measurement, CM = 1.8 V, class-D gain = 18 dB, THD = 10%		540		mW
		SPLVDD = SPRVDD = 4.3 V, BTL measurement, CM = 1.8 V, class-D gain = 18 dB, THD = 10%		790		
		SPLVDD = SPRVDD = 5.5 V, BTL measurement, CM = 1.8 V, class-D gain = 18 dB, THD = 10%		1.29		W
	Output-stage leakage current for direct battery connection	SPLVDD = SPRVDD = 4.3 V, device is powered down (power-up-reset condition)		80		nA
ADC AND DAC POWER CONSUMPTION						
For ADC and DAC power consumption based per selected processing block, see Section 5.3.						
DIGITAL INPUT/OUTPUT						
Logic family				CMOS		
V_{IH}	Logic level	I_{IH} = 5 µA, IOVDD ≥ 1.6 V	0.7 × IOVDD			V
		I_{IH} = 5 µA, IOVDD < 1.6 V	IOVDD			
V_{IL}		I_{IL} = 5 µA, IOVDD ≥ 1.6 V	–0.3		0.3 × IOVDD	V
		I_{IL} = 5 µA, IOVDD < 1.6 V			0	
V_{OH}		I_{OH} = 2 TTL loads	0.8 × IOVDD			V
V_{OL}		I_{OL} = 2 TTL loads			0.1 × IOVDD	V
	Capacitive load			10		pF

(1) Ratio of output level with 1-kHz full-scale sine-wave input, to the output level with the inputs short-circuited, measured A-weighted over a 20-Hz to 20-kHz bandwidth using an audio analyzer.

(2) All performance measurements done with 20-kHz low-pass filter and, where noted, A-weighted filter. Failure to use such a filter may result in higher THD+N and lower SNR and dynamic range readings than shown in the *Electrical Characteristics*. The low-pass filter removes out-of-band noise, which, although not audible, may affect dynamic specification values.

(3) DAC to speaker-out PSRR is a differential measurement calculated as PSRR = 20 × log($\Delta V_{SPL(P+M)}$ / ΔV_{SPLVDD}).

Copyright © 2009, Texas Instruments Incorporated

3.4 Timing Characteristics

3.4.1 I^2S/LJF/RJF Timing in Master Mode

All specifications at 25°C, DVDD = 1.8 V

Note: All timing specifications are measured at characterization.

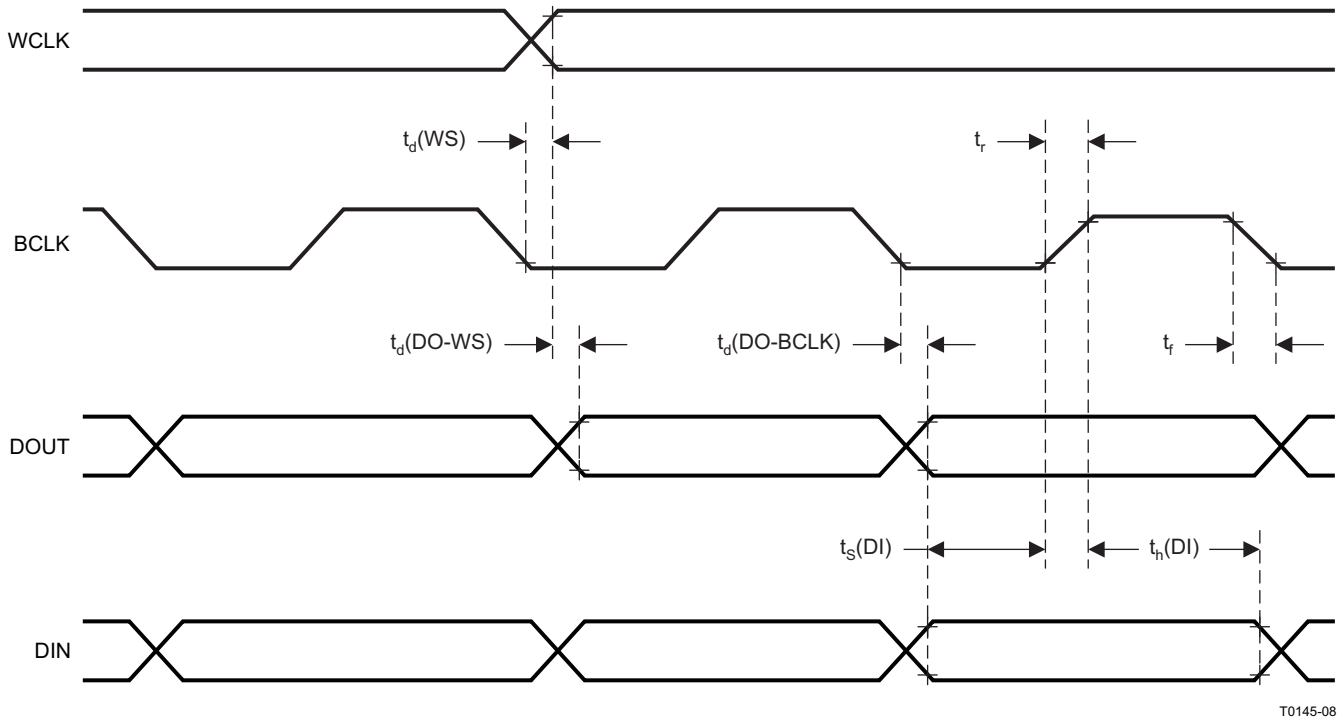

PARAMETER		IOVDD = 1.1 V		IOVDD = 3.3 V		UNITS
		MIN	MAX	MIN	MAX	
t_d(WS)	WCLK delay		45		20	ns
t_d(DO-WS)	WCLK to DOUT delay (for LJF mode only)		45		20	ns
t_d(DO-BCLK)	BCLK to DOUT delay		45		20	ns
t_s(DI)	DIN setup	8		6		ns
t_h(DI)	DIN hold	8		6		ns
t_r	Rise time		25		10	ns
t_f	Fall time		25		10	ns

Figure 3-1. I^2S/LJF/RJF Timing in Master Mode

Copyright © 2009, Texas Instruments Incorporated

3.4.2 I^2S/LJF/RJF Timing in Slave Mode

All specifications at 25°C, DVDD = 1.8 V

Note: All timing specifications are measured at characterization.

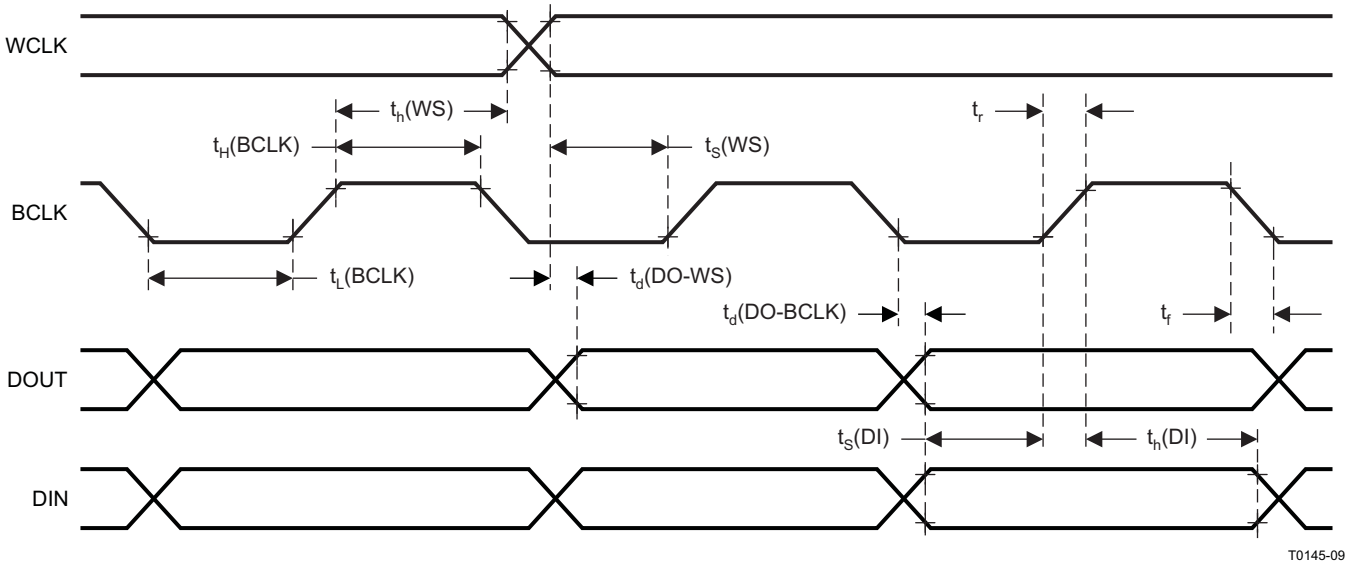

PARAMETER		IOVDD = 1.1 V		IOVDD = 3.3 V		UNIT
		MIN	MAX	MIN	MAX	
t_H(BCLK)	BCLK high period	35		35		ns
t_L(BCLK)	BCLK low period	35		35		ns
t_s(WS)	WCLK setup	8		6		ns
t_h(WS)	WCLK hold	8		6		ns
t_d(DO-WS)	WCLK to DOUT delay (for LJF mode only)		45		20	ns
t_d(DO-BCLK)	BCLK to DOUT delay		45		20	ns
t_s(DI)	DIN setup	8		6		ns
t_h(DI)	DIN hold	8		6		ns
t_r	Rise time		4		4	ns
t_f	Fall time		4		4	ns

Figure 3-2. I^2S/LJF/RJF Timing in Slave Mode

Copyright © 2009, Texas Instruments Incorporated

3.4.3 DSP Timing in Master Mode

All specifications at 25°C, DVDD = 1.8 V

Note: All timing specifications are measured at characterization.

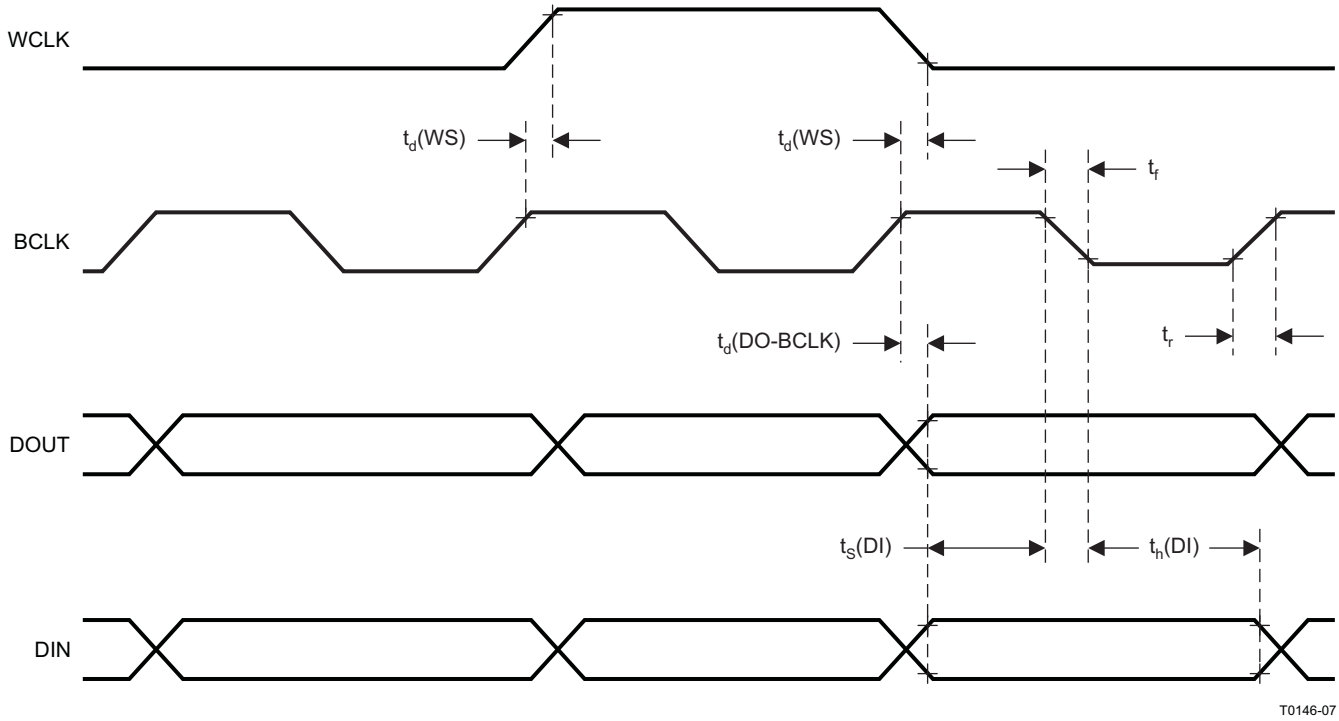

PARAMETER		IOVDD = 1.1 V		IOVDD = 3.3 V		UNITS
		MIN	MAX	MIN	MAX	
t_d(WS)	WCLK delay		45		20	ns
t_d(DO-BCLK)	BCLK to DOUT delay		45		20	ns
t_S(DI)	DIN setup	8		8		ns
t_h(DI)	DIN hold	8		8		ns
t_r	Rise time		25		10	ns
t_f	Fall time		25		10	ns

Figure 3-3. DSP Timing in Master Mode

Copyright © 2009, Texas Instruments Incorporated

3.4.4 DSP Timing in Slave Mode

All specifications at 25°C, DVDD = 1.8 V

Note: All timing specifications are measured at characterization.

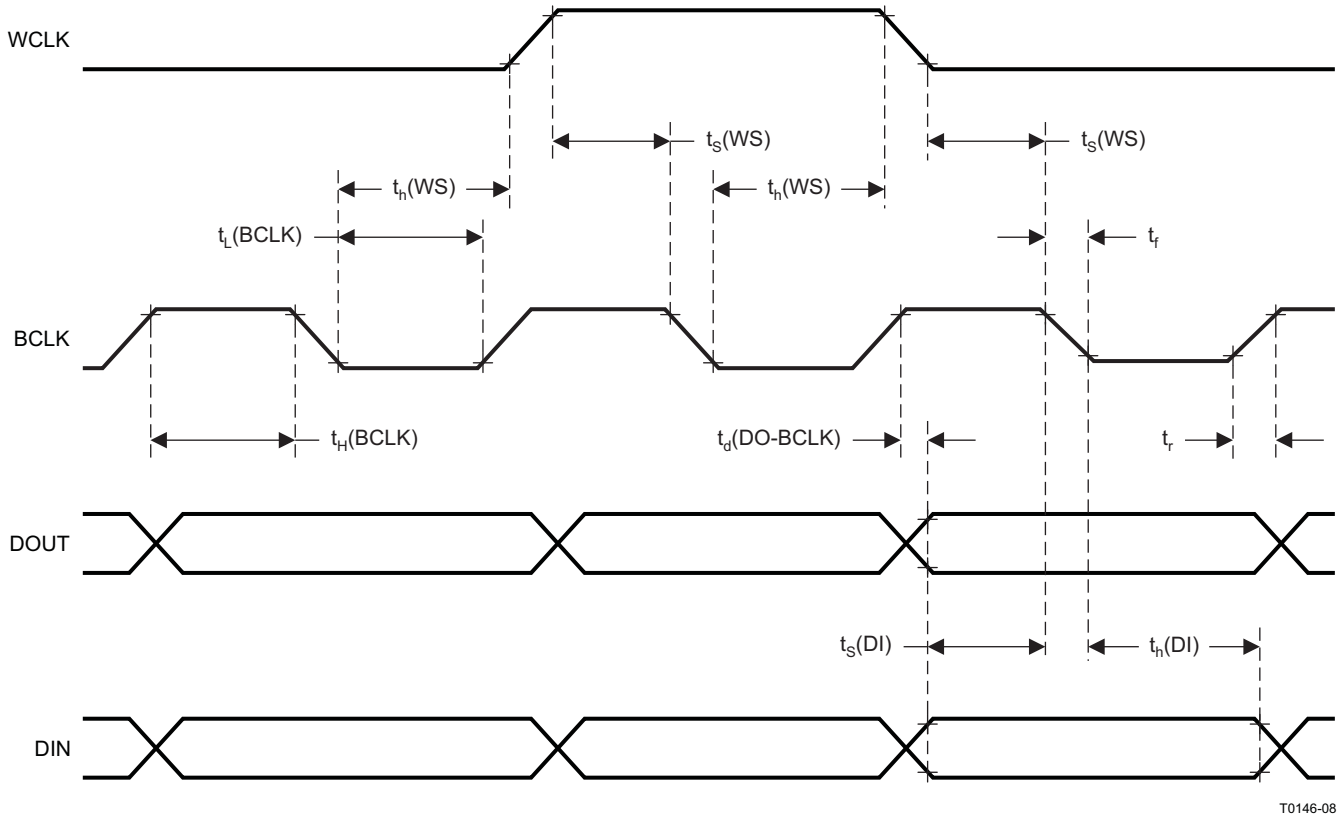

PARAMETER		IOVDD = 1.1 V		IOVDD = 3.3 V		UNITS
		MIN	MAX	MIN	MAX	
t_H(BCLK)	BCLK high period	35		35		ns
t_L(BCLK)	BCLK low period	35		35		ns
t_s(WS)	WCLK setup	8		8		ns
t_h(WS)	WCLK hold	8		8		ns
t_d(DO-BCLK)	BCLK to DOUT delay		45		20	ns
t_s(DI)	DIN setup	8		8		ns
t_h(DI)	DIN hold	8		8		ns
t_r	Rise time		4		4	ns
t_f	Fall time		4		4	ns

Figure 3-4. DSP Timing in Slave Mode

Copyright © 2009, Texas Instruments Incorporated

3.4.5 I^2C Interface Timing

All specifications at 25°C, DVDD = 1.8 V

Note: All timing specifications are measured at characterization.

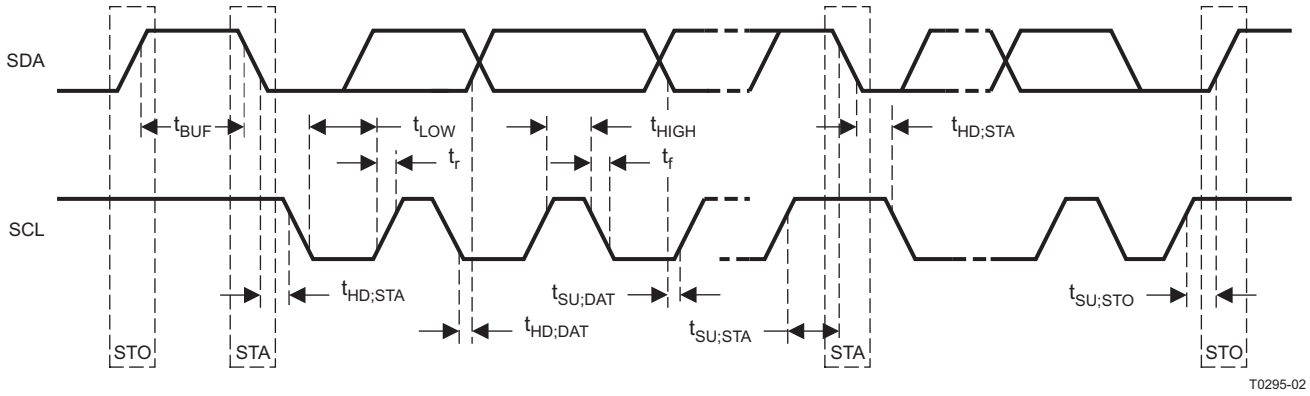

PARAMETER		Standard-Mode			Fast-Mode			UNITS
		MIN	TYP	MAX	MIN	TYP	MAX	
f_{SCL}	SCL clock frequency	0		100	0		400	kHz
$t_{HD;STA}$	Hold time (repeated) START condition. After this period, the first clock pulse is generated.	4			0.8			µs
t_{LOW}	LOW period of the SCL clock	4.7			1.3			µs
t_{HIGH}	HIGH period of the SCL clock	4			0.6			µs
$t_{SU;STA}$	Setup time for a repeated START condition	4.7			0.8			µs
$t_{HD;DAT}$	Data hold time: For I^2C bus devices	0		3.45	0		0.9	µs
$t_{SU;DAT}$	Data set-up time	250			100			ns
t_r	SDA and SCL Rise Time			1000	20 + 0.1C_b		300	ns
t_f	SDA and SCL Fall Time			300	20 + 0.1C_b		300	ns
$t_{SU;STO}$	Set-up time for STOP condition	4			0.8			µs
t_{BUF}	Bus free time between a STOP and START condition	4.7			1.3			µs
C_b	Capacitive load for each bus line			400			400	pF

Figure 3-5. I^2C Interface Timing

Copyright © 2009, Texas Instruments Incorporated

4 TYPICAL PERFORMANCE

4.1 Audio ADC Performance

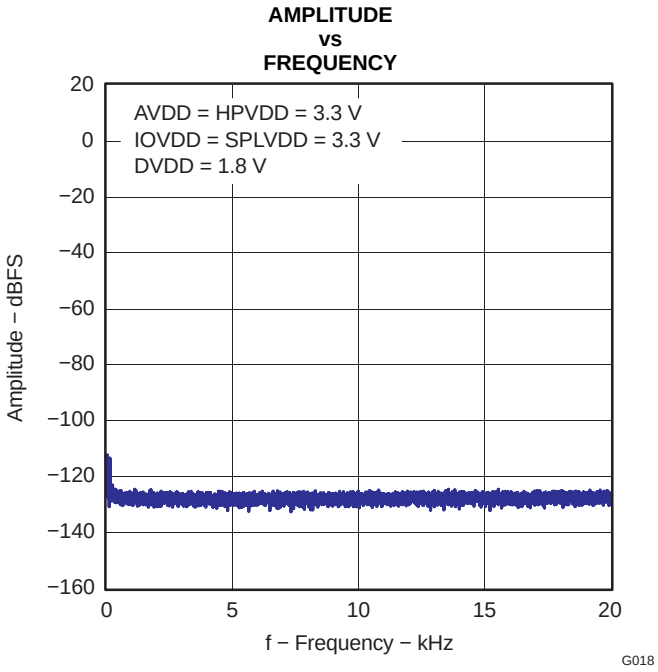

Figure 4-1. FFT – ADC Idle Channel Differential

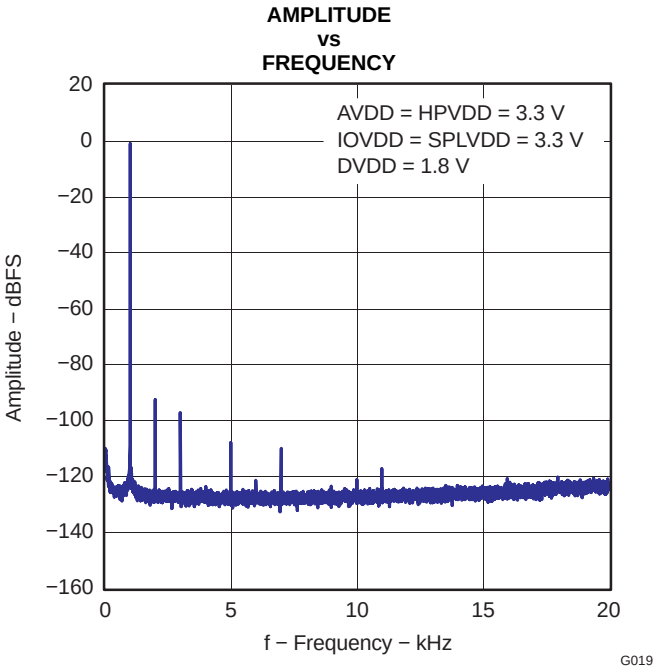

Figure 4-2. FFT – ADC Single-Ended Input

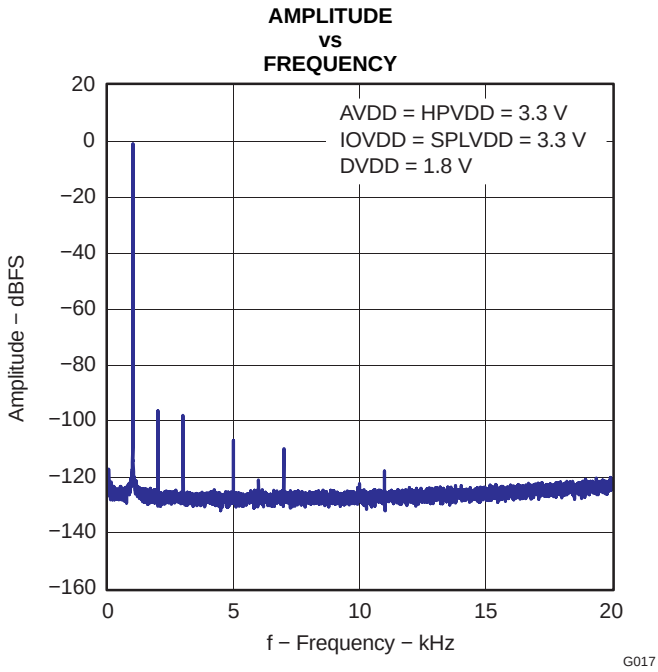

Figure 4-3. FFT – ADC Differential Input

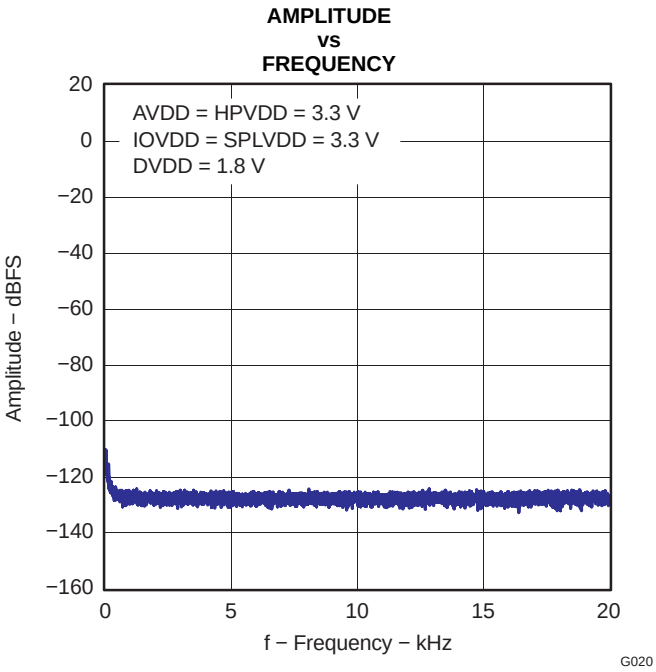

Figure 4-4. FFT – ADC Idle Channel, Single-Ended

Copyright © 2009, Texas Instruments Incorporated

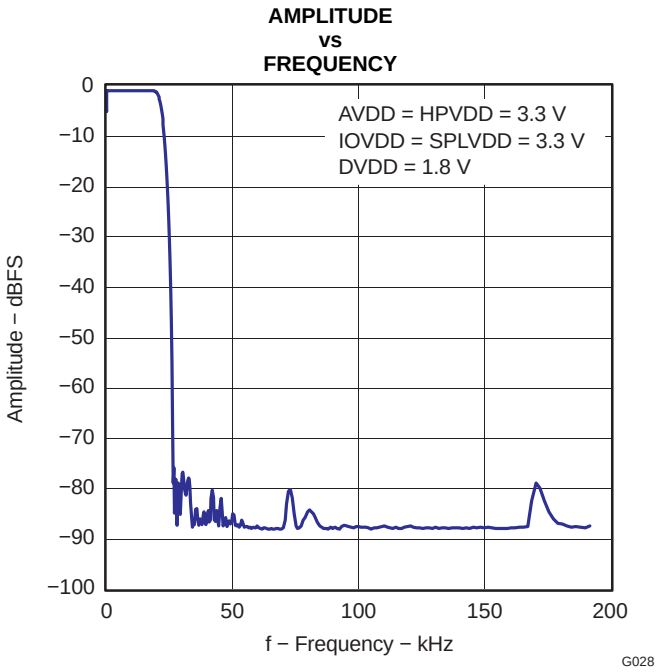

Figure 4-5. Frequency Response, Audio ADC Channel

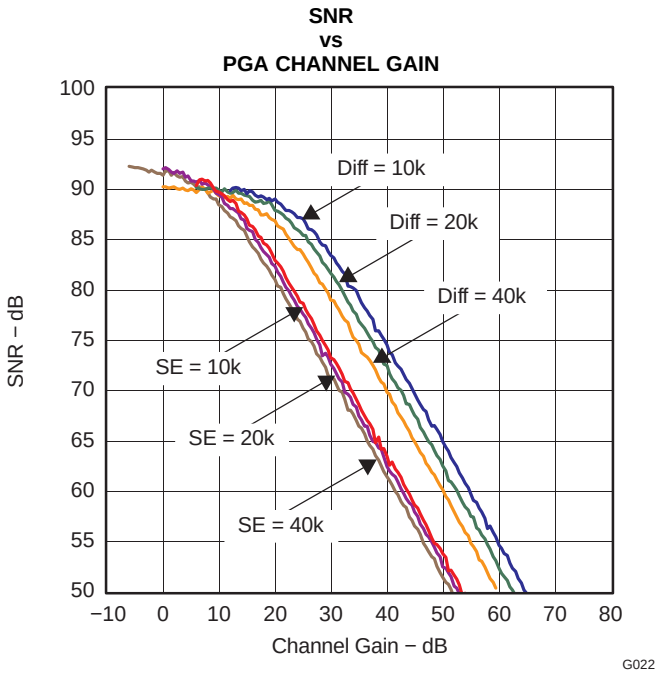

Figure 4-6. SNR vs. PGA Gain, Audio ADC Channel

4.2 DAC Performance

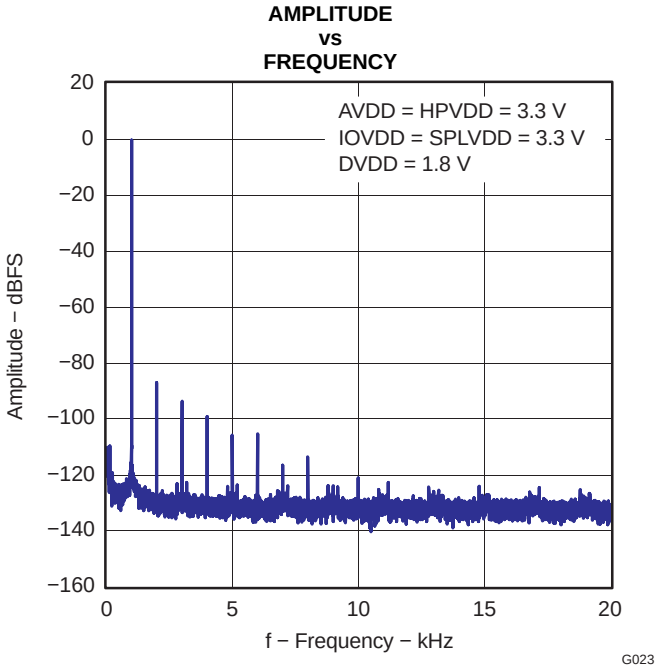

Figure 4-7. FFT – DAC to Line Output

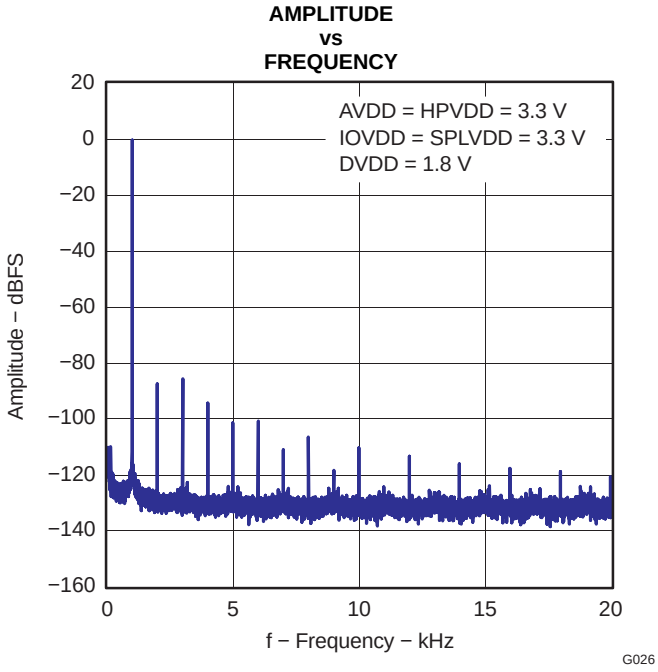

Figure 4-8. FFT – DAC to Headphone Output

Copyright © 2009, Texas Instruments Incorporated

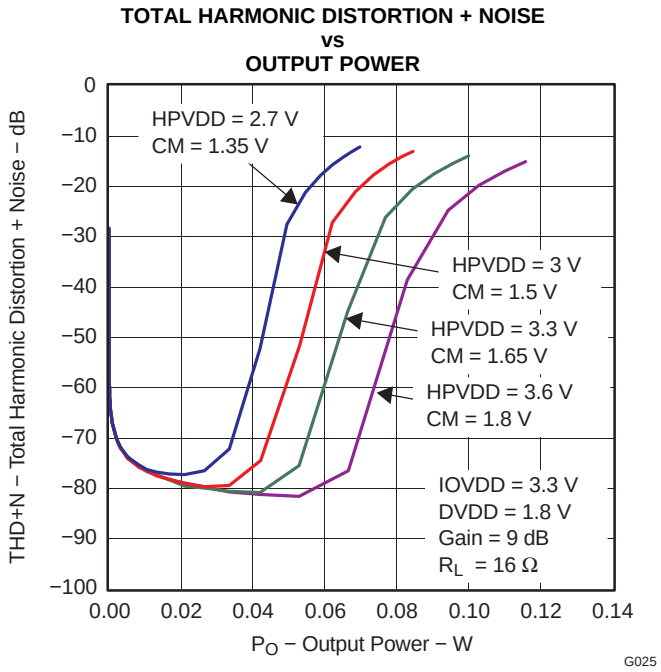

Figure 4-9. Headphone Output Power

4.3 Class-D Speaker Driver Performance

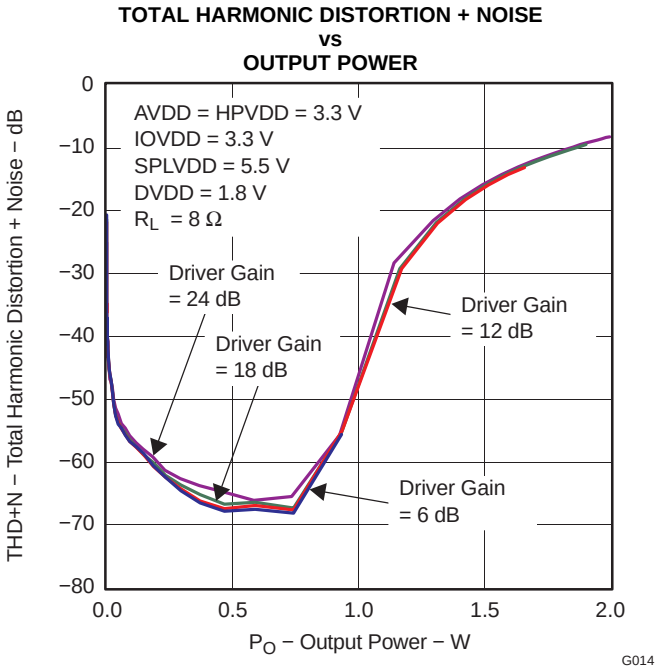

Figure 4-10. Max Class-D Speaker-Driver Output Power

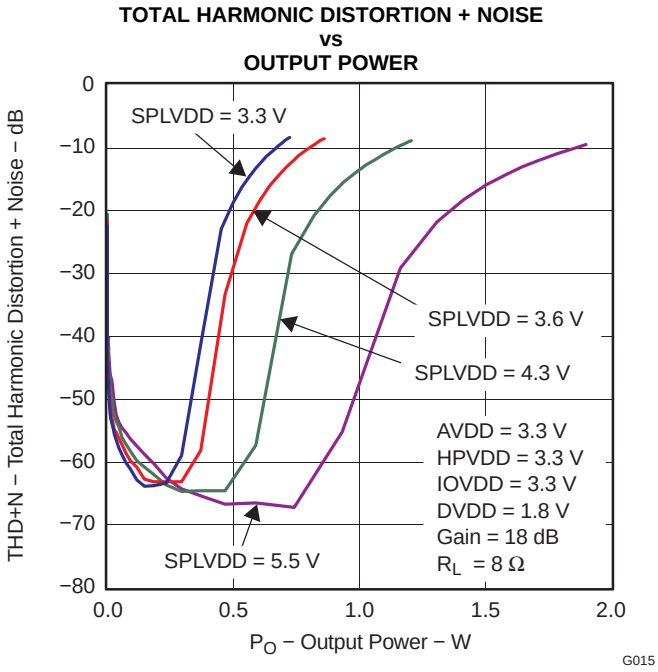

Figure 4-11. Class-D Speaker-Driver Output Power

Copyright © 2009, Texas Instruments Incorporated

4.4 Analog Bypass Performance

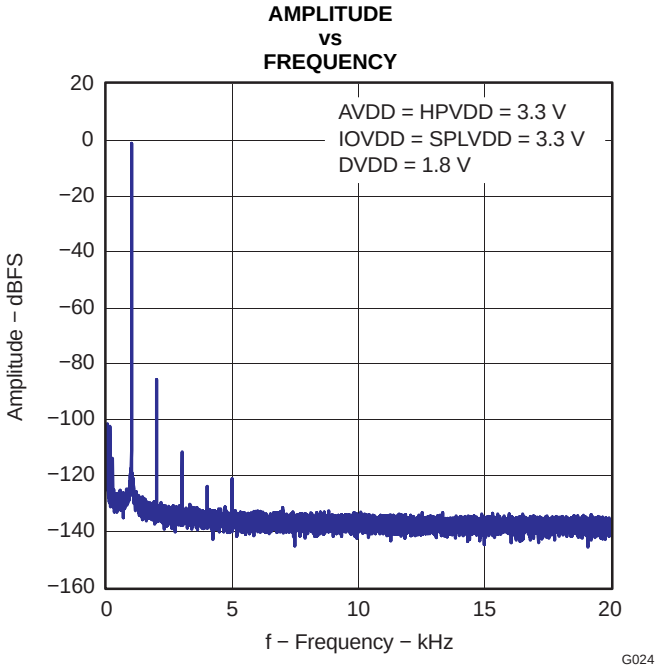

Figure 4-12. FFT – Line-In Bypass to Line Output

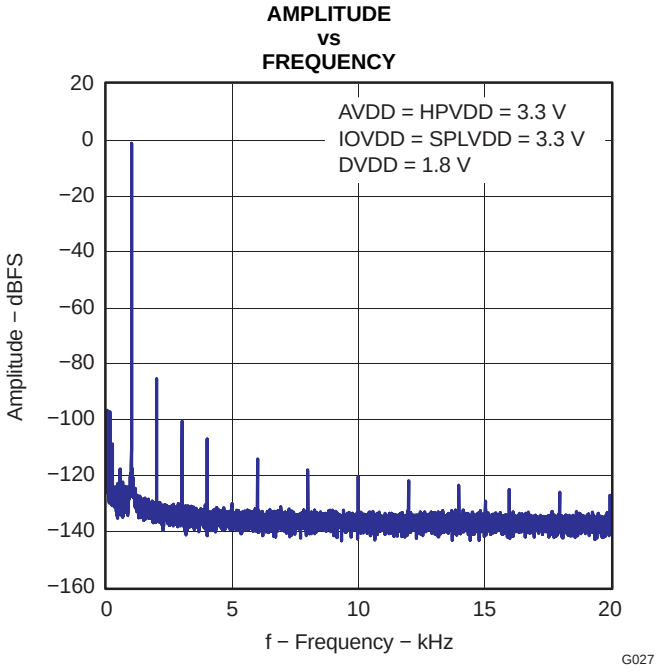

Figure 4-13. FFT – Line-In Bypass to Headphone Output

4.5 MICBIAS Performance

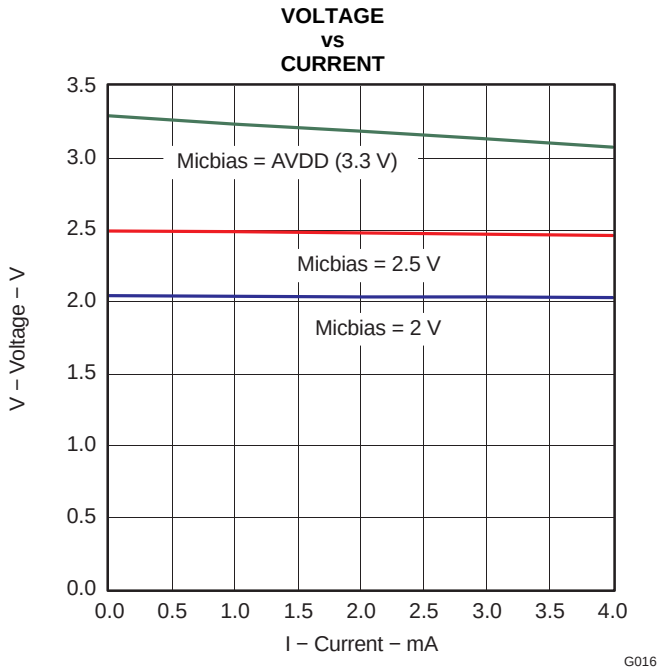

Figure 4-14. MICBIAS

5 APPLICATION INFORMATION

5.1 Typical Circuit Configuration

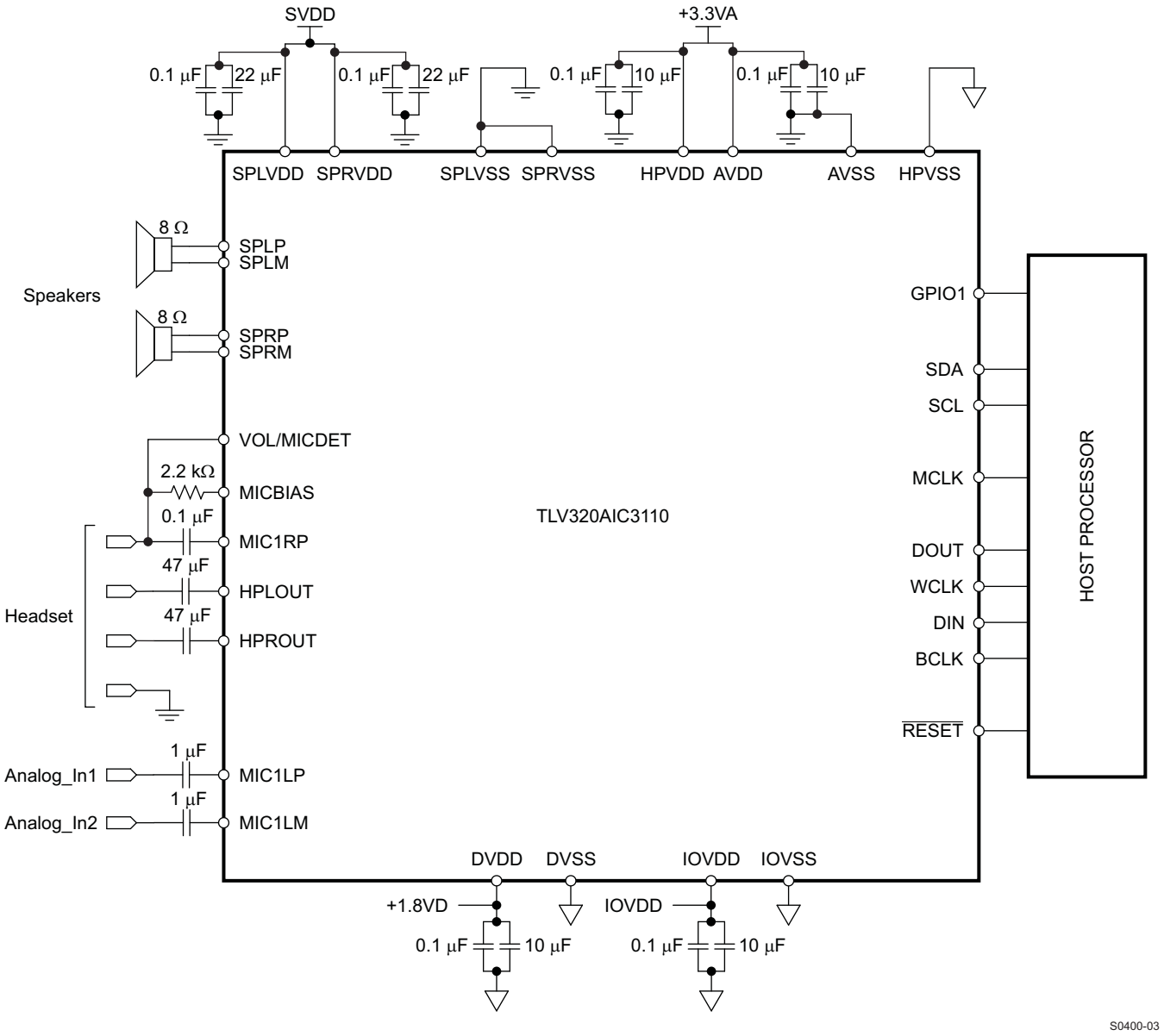

Figure 5-1. Typical Circuit Configuration

5.2 Overview

The TLV320AIC3110 is a highly integrated stereo audio DAC and monaural ADC for portable computing, communication, and entertainment applications. A register-based architecture eases integration with microprocessor-based systems through standard serial-interface buses. This device supports the 2-wire I^2C bus interface which provides full register access. All peripheral functions are controlled through these registers and the onboard state machines.

The TLV320AIC3110 consists of the following blocks:

- Microphone interfaces (analog and digital)
- Audio codec (mono ADC and stereo DAC)

Copyright © 2009, Texas Instruments Incorporated

- Digital audio processing blocks (PRB) for play and record paths
- AGC and DRC
- Digital sine-wave generator for beeps
- Stereo headphone/lineout amplifier
- Class-D stereo amplifier for 8-Ω speakers
- Pin-controlled or register-controlled volume level
- Power-down de-pop and power-up soft start
- Analog inputs
- I^2C control interface
- Power-down control block

Following a toggle of the $\overline{\text{RESET}}$ pin or a software reset, the device operates in the default mode. The I^2C interface is used to write to the control registers to configure the device.

The I^2C address assigned to the TLV320AIC3110 is 001 1000. This device always operates in an I^2C slave mode. All registers are 8-bit, and all writable registers have read-back capability. The device auto-increments to support sequential addressing and can be used with I^2C fast mode. Once the device is reset, all appropriate registers are updated by the host processor to configure the device as needed by the user.

5.2.1 Device Initialization

5.2.1.1 Reset

The TLV320AIC3110 internal logic must be initialized to a known condition for proper device function. To initialize the device to its default operating condition, the hardware reset pin ($\overline{\text{RESET}}$) must be pulled low for at least 10 ns. For this initialization to work, both the IOVDD and DVDD supplies must be powered up. It is recommended that while the DVDD supply is being powered up, the $\overline{\text{RESET}}$ pin be pulled low.

The device can also be reset via software reset. Writing a 1 into page 0 / register 1, bit D0 resets the device.

5.2.1.2 Device Start-Up Lockout Times

After the TLV320AIC3110 is initialized through hardware reset at power up or software reset, the internal memories are initialized to default values. This initialization takes place within 1 ms after pulling the $\overline{\text{RESET}}$ signal high. During this initialization phase, no register-read or register-write operation should be performed on ADC or DAC coefficient buffers. Also, no block within the codec should be powered up during the initialization phase.

5.2.1.3 PLL Start-Up

Whenever the PLL is powered up, a start-up delay of approximately of 10 ms occurs after the power-up command of the PLL and before the clocks are available to the codec. This delay is to ensure stable operation of the PLL and clock-divider logic.

5.2.1.4 Power-Stage Reset

The power-stage-only reset is used to reset the device after an overcurrent latching shutdown has occurred. Using this reset re-enables the output stage without resetting all of the registers in the device. Each of the four power stages has its own dedicated reset bit. The headphone power-stage reset is performed by setting page 1 / register 31, bit D7 for HPL and by setting page 1 / register 31, bit D6 for HPR. The speaker power-stage reset is performed by setting page 1 / register 32, bit D7 for SPLP and SPLM, and by setting page 1 / register 32, bit D6 for SPRP and SPRM.

Copyright © 2009, Texas Instruments Incorporated

5.2.1.5 Software Power Down

By default, all circuit blocks are powered down following a reset condition. Hardware power up of each circuit block can be controlled by writing to the appropriate control register. This approach allows the lowest power-supply current for the functionality required. However, when a block is powered down, all of the register settings are maintained as long as power is still being applied to the device.

5.2.2 Audio Analog I/O

The TLV320AIC3110 has a stereo audio DAC and a monaural ADC. It supports a wide range of analog interfaces to support different headsets and analog outputs. The TLV320AIC3110 has features to interface output drivers (8-Ω, 16-Ω, 32-Ω) and a microphone PGA with AGC control. A special circuit has also been included in the TLV320AIC3110 to insert a short key-click sound into the stereo audio output. The key-click sound is used to provide feedback to the user when a particular button is pressed or item is selected. The specific sound of the keyclick can be adjusted by varying several register bits that control its frequency, duration, and amplitude. See *Key-Click Functionality With Digital Sine-Wave Generator (PRB_P25)*, Section 5.5.5.

5.3 Digital Processing Low-Power Modes

The TLV320AIC3110 device can be tuned to minimize power dissipation, to maximize performance, or to an operating point between the two extremes to best fit the application. The choice of processing blocks, PRB_P1 to PRB_P25 for stereo playback and PRB_R4 to PRB_R18 for mono recording, also influences the power consumption. In fact, the numerous processing blocks have been implemented to offer a choice among configurations having a different balance of power-optimization and signal-processing capabilities.

5.3.1 ADC, Mono, 48 kHz, DVDD = 1.8 V, AVDD = 3.3 V

AOSR = 128, Processing Block = PRB_R4 (Decimation Filter A)

Power consumption = 9.01 mW

Table 5-1. PRB_R4 Alternative Processing Blocks, 9.01 mW

Processing Block	Filter	Estimated Power Change (mW)
PRB_R5	A	0.23
PRB_R6	A	0.22

AOSR = 64, Processing Block = PRB_R11 (Decimation Filter B)

Power consumption = 7.99 mW

Table 5-2. PRB_R11 Alternative Processing Blocks, 7.99 mW

Processing Block	Filter	Estimated Power Change (mW)
PRB_R4	A	0.43
PRB_R5	A	0.67
PRB_R6	A	0.66
PRB_R10	B	–0.14
PRB_R12	B	0.04

Copyright © 2009, Texas Instruments Incorporated

5.3.2 ADC, Mono, 8 kHz, DVDD = 1.8 V, AVDD = 3.3 V

AOSR = 128, Processing Block = PRB_R4 (Decimation Filter A)

Power consumption = 6.77 mW

Table 5-3. PRB_R4 Alternative Processing Blocks, 6.77 mW

Processing Block	Filter	Estimated Power Change (mW)
PRB_R5	A	0.03
PRB_R6	A	0.03

AOSR = 64, Processing Block = PRB_R11 (Decimation Filter B)

Power consumption = 6.61 mW

Table 5-4. PRB_R11 Alternative Processing Blocks, 6.61 mW

Processing Block	Filter	Estimated Power Change (mW)
PRB_R4	A	0.07
PRB_R5	A	0.11
PRB_R6	A	0.11
PRB_R10	B	–0.02
PRB_R12	B	0.01

5.3.3 DAC Playback on Headphones, Stereo, 48 kHz, DVDD = 1.8 V, AVDD = 3.3 V, HPVDD = 3.3 V

DOSR = 128, Processing Block = PRB_P7 (Interpolation Filter B)

Power consumption = 24.28 mW

Table 5-5. PRB_P7 Alternative Processing Blocks, 24.28 mW

Processing Block	Filter	Estimated Power Change (mW)
PRB_P1	A	1.34
PRB_P2	A	2.86
PRB_P3	A	2.11
PRB_P8	B	1.18
PRB_P9	B	0.53
PRB_P10	B	1.89
PRB_P11	B	0.87
PRB_P23	A	1.48
PRB_P24	A	2.89
PRB_P25	A	3.23

Copyright © 2009, Texas Instruments Incorporated

DOSR = 64, Processing Block = PRB_P7 (Interpolation Filter B)

Power consumption = 24.5 mW

Table 5-6. PRB_P7 Alternative Processing Blocks, 24.5 mW

Processing Block	Filter	Estimated Power Change (mW)
PRB_P1	A	1.17
PRB_P2	A	2.62
PRB_P3	A	2
PRB_P8	B	0.99
PRB_P9	B	0.5
PRB_P10	B	1.46
PRB_P11	B	0.66
PRB_P23	A	1.43
PRB_P24	A	2.69
PRB_P25	A	2.92

5.3.4 DAC Playback on Headphones, Mono, 48 kHz, DVDD = 1.8 V, AVDD = 3.3 V, HPVDD = 3.3 V

DOSR = 128, Processing Block = PRB_P12 (Interpolation Filter B)

Power consumption = 15.4 mW

Table 5-7. PRB_P12 Alternative Processing Blocks, 15.4 mW

Processing Block	Filter	Estimated Power Change (mW)
PRB_P4	A	0.57
PRB_P5	A	1.48
PRB_P6	A	1.08
PRB_P13	B	0.56
PRB_P14	B	0.27
PRB_P15	B	0.89
PRB_P16	B	0.31

DOSR = 64, Processing Block = PRB_P12 (Interpolation Filter B)

Power consumption = 15.54 mW

Table 5-8. PRB_P12 Alternative Processing Blocks, 15.54 mW

Processing Block	Filter	Estimated Power Change (mW)
PRB_P4	A	0.37
PRB_P5	A	1.23
PRB_P6	A	1.15
PRB_P13	B	0.43
PRB_P14	B	0.13
PRB_P15	B	0.85
PRB_P16	B	0.21

Copyright © 2009, Texas Instruments Incorporated

5.3.5 DAC Playback on Headphones, Stereo, 8 kHz, DVDD = 1.8 V, AVDD = 3.3 V, HPVDD = 3.3 V

DOSR = 768, Processing Block = PRB_P7 (Interpolation Filter B)

Power consumption = 22.44 mW

Table 5-9. PRB_P7 Alternative Processing Blocks, 22.44 mW

Processing Block	Filter	Estimated Power Change (mW)
PRB_P1	A	0.02
PRB_P2	A	0.31
PRB_P3	A	0.23
PRB_P8	B	0.28
PRB_P9	B	–0.03
PRB_P10	B	0.14
PRB_P11	B	0.05
PRB_P23	A	0.29
PRB_P24	A	0.26
PRB_P25	A	0.47

DOSR = 384, Processing Block = PRB_P7 (Interpolation Filter B)

Power consumption = 22.83 mW

Table 5-10. PRB_P7 Alternative Processing Blocks, 22.83 mW

Processing Block	Filter	Estimated Power Change (mW)
PRB_P1	A	0.27
PRB_P2	A	0.4
PRB_P3	A	0.34
PRB_P8	B	0.2
PRB_P9	B	0.08
PRB_P10	B	0.24
PRB_P11	B	0.12
PRB_P23	A	0.23
PRB_P24	A	0.42
PRB_P25	A	0.46

5.3.6 DAC Playback on Headphones, Mono, 8 kHz, DVDD = 1.8 V, AVDD = 3.3 V, HPVDD = 3.3 V

DOSR = 768, Processing Block = PRB_P12 (Interpolation Filter B)

Power consumption = 14.49 mW

Table 5-11. PRB_P12 Alternative Processing Blocks, 14.49 mW

Processing Block	Filter	Estimated Power Change (mW)
PRB_P4	A	–0.04
PRB_P5	A	0.2
PRB_P6	A	–0.01
PRB_P13	B	0.1
PRB_P14	B	0.05
PRB_P15	B	–0.03
PRB_P16	B	0.07

Copyright © 2009, Texas Instruments Incorporated

DOSR = 384, Processing Block = PRB_P12 (Interpolation Filter B)

Power consumption = 14.42 mW

Table 5-12. PRB_P12 Alternative Processing Blocks, 14.42 mW

Processing Block	Filter	Estimated Power Change (mW)
PRB_P4	A	0.16
PRB_P5	A	0.3
PRB_P6	A	0.2
PRB_P13	B	0.15
PRB_P14	B	0.07
PRB_P15	B	0.18
PRB_P16	B	0.09

5.3.7 DAC Playback on Headphones, Stereo, 192 kHz, DVDD = 1.8 V, AVDD = 3.3 V, HPVDD = 3.3 V

DOSR = 32, Processing Block = PRB_P17 (Interpolation Filter C)

Power consumption = 27.05 mW

Table 5-13. PRB_P17 Alternative Processing Blocks, 27.05 mW

Processing Block	Filter	Estimated Power Change (mW)
PRB_P18	C	5.28
PRB_P19	C	1.98

5.3.8 DAC Playback on Line Out (10 k-Ω load), Stereo, 48 kHz, DVDD = 1.8 V, AVDD = 3 V, HPVDD = 3 V

DOSR = 64, Processing Block = PRB_P7 (Interpolation Filter B)

Power consumption = 12.85 mW

5.4 Audio ADC and Analog Inputs

5.4.1 MICBIAS and Microphone Preamplifier

The TLV320AIC3110 includes a microphone bias circuit which can source up to 4 mA of current and is programmable to a 2-V, 2.5-V, or AVDD level. The level can be controlled by writing to page 1 / register 46, bits D1–D0. This functionality is shown in Table 5-14.

Table 5-14. MICBIAS Settings

D1	D0	FUNCTIONALITY
0	0	MICBIAS output is powered down.
0	1	MICBIAS output is powered to 2 V.
1	0	MICBIAS output is powered to 2.5 V.
1	1	MICBIAS output is powered to AVDD.

During normal operation, MICBIAS can be set to 2.5 V for better performance. However, depending on the model of microphone that is selected, optimal performance might be obtained at another setting, so the performance at a given setting should be verified.

The lowest current consumption occurs when MICBIAS is powered down. The next-lowest current consumption occurs when MICBIAS is set at AVDD.

Copyright © 2009, Texas Instruments Incorporated

Because of the oversampling nature of the audio ADC and the integrated digital decimation filtering, requirements for analog anti-aliasing filtering are very relaxed. The TLV320AIC3110 integrates a second-order analog anti-aliasing filter with 20-dB attenuation at 1 MHz. This filter, combined with the digital decimal filter, provides sufficient anti-aliasing filtering without requiring any external components.

The MIC PGA supports analog gain control from from 0 dB to 59.5 dB in steps of 0.5 dB. These gain levels can be controlled by writing to page 1 / register 47, bits D6–D0. The PGA gain changes are implemented with internal soft-stepping. This soft-stepping ensures that volume-control changes occur smoothly with no audible artifacts. On reset, the MIC PGA gain defaults to a mute condition, with soft stepping enabled. The ADC soft-stepping control can be enabled or disabled by writing to page 0 / register 81, bits D1–D0. ADC soft-stepping timing is provided by the internal oscillator and internal divider logic block.

The input feed-forward resistance for the MIC1LP input of the microphone PGA stage has three settings of 10 kΩ, 20 kΩ, and 40 kΩ, which are controlled by writing to page 1 / register 48, bits D7 and D6. The input feed-forward resistance value selected affects the gain of the microphone PGA. The ADC PGA gain for the MIC1LP input depends on the setting of page 1 / register 48 and page 1 / register 49, bits D7–D6. If D7–D6 are set to 01, then the ADC PGA has 6 dB more gain with respect to the value programmed using page 1 / register 47. If D7–D6 are set to 10, then the ADC PGA has the same gain as programmed using page 1 / register 47. If D7–D6 are set to 11, then the ADC PGA has 6 dB less gain with respect to the value programmed using page 1 / register 47. The same gain scaling is also valid for the MIC1RP and MIC1LM input, based on the feed-forward resistance selected using page 1 / register 48, bits D5–D2.

The MIC PGA gain can be controlled either by an AGC loop or as a fixed gain. See Figure 1-1 for the various analog input routings to the MIC PGA that are supported in the single-ended and differential configurations. The AGC can be enabled by writing to page 0 / register 86, bit D7. If the AGC is not enabled, then setting a fixed gain is done by writing to page 1 / register 47, bits D6–D0. Because the TLV320AIC3110 supports soft-stepping gain changes, a read-only flag on page 0 / register 36, bit D7 is set whenever the gain applied by the PGA equals the desired value set by the gain register. The MIC PGA can be enabled by writing to page 1 / register 47, bit D7. ADC muting can be done by writing to page 0 / register 82, bit D7 and page 1 / register 47, bit D7. Disabling the MIC PGA sets the gain to 0 dB. Muting the ADC causes the digital output to mute so that the output value remains fixed. When soft-stepping is enabled, the CODEC_CLKIN signal must stay active until after the ADC power-down register is written, in order to ensure that soft-stepping to mute has had time to complete. When the ADC POWER UP flag is no longer set, the CODEC_CLKIN signal can be shut down.

5.4.2 Automatic Gain Control (AGC)

The TLV320AIC3110 includes automatic gain control (AGC) for the microphone inputs. AGC can be used to maintain nominally constant output-signal amplitude when recording speech signals. This circuitry automatically adjusts the MIC PGA gain as the input signal becomes overly loud or very weak, such as when a person speaking into a microphone moves closer to or farther from the microphone. The AGC algorithm has several programmable settings, including target gain, attack and decay time constants, noise threshold, and maximum PGA applicable, that allow the algorithm to be fine-tuned for any particular application. The algorithm uses the absolute average of the signal (which is the average of the absolute value of the signal) as a measure of the nominal amplitude of the output signal. Because the gain can be changed at the sample interval time, the AGC algorithm operates at the ADC_f_S clock rate.

Target level represents the nominal output level at which the AGC attempts to hold the ADC output signal level. The TLV320AIC3110 allows programming of eight different target levels, which can be programmed from –5.5 dB to –24 dB relative to a full-scale signal. Because the TLV320AIC3110 reacts to the signal absolute average and not to peak levels, it is recommended that the target level be set with enough margin to avoid clipping at the occurrence of loud sounds.

Copyright © 2009, Texas Instruments Incorporated

An **AGC low-pass filter** is used to help determine the average level of the input signal. This average level is compared to the programmed detection levels in the AGC to provide the correct functionality. This low-pass filter is in the form of a first-order IIR filter. Programming this filter is done by writing to page 4 / register 2 through page 4 / register 7. Two 8-bit registers are used to form the 16-bit digital coefficient as shown on the register map. In this way, a total of six registers are programmed to form the three IIR coefficients.

Attack time determines how quickly the AGC circuitry reduces the PGA gain when the input signal is too loud. Programming the attack time is done by writing to page 0 / register 89, bits D7–D0.

Decay time determines how quickly the PGA gain is increased when the input signal is too low. Programming the decay time is done by writing to page 0 / register 90, bits D7–D0.

Noise threshold is a reference level. If the input speech average value falls below the noise threshold, the AGC considers it as a silence and hence brings down the gain to 0 dB in steps of 0.5 dB every sample period and sets the noise-threshold flag. The gain stays at 0 dB unless the input speech signal average rises above the noise-threshold setting. This ensures that noise is not amplified in the absence of speech. The noise-threshold level in the AGC algorithm is programmable from –30 dB to –90 dB for the microphone input. When the AGC noise threshold is set to –70 dB, –80 db, or –90 dB, the microphone input maximum PGA applicable setting must be greater than or equal to 11.5 dB, 21.5 dB, or 31.5 dB, respectively. This operation includes debounce and hysteresis to prevent the AGC gain from cycling between high gain and 0 dB when signals are near the noise threshold level. When the noise-threshold flag is set, the status of the gain applied by the AGC and the saturation flag has no meaning. Programming the noise debounce is done by writing to page 0 / register 91, bits D4–D0. Programming the signal debounce is done by writing to page 0 / register 92, bits D3–D0.

Max PGA applicable allows the user to restrict maximum gain applied by AGC. This can be used for limiting PGA gain in situations where environmental noise is greater than the programmed noise threshold. Microphone input maximum PGA can be programmed from 0 dB to 59.5 dB in steps of 0.5 dB. Programming the maximum PGA gain allowed by the AGC is done by writing to page 0 / register 88, bits D6–D0.

See Table 5-15 for various AGC programming options. AGC can be used only if the microphone input is routed to the ADC channel.

Table 5-15. AGC Settings(1)

CONTROL REGISTER	BIT	FUNCTION
36	D5 (Read-only)	AGC saturation flag
39	D3 (Read-only)	ADC saturation flag
45	D6 (Read-only)	Signal to level setting of noise threshold
86	D7	AGC enable
86	D6–D4	Target level
87	D7–D6	Hysteresis
87	D5–D1	Noise threshold
88	D6–D0	Maximum PGA applicable
89	D7–D0	Time constants (attack time)
90	D7–D0	Time constants (decay time)
91	D4–D0	Debounce time (noise)
92	D3–D0	Debounce time (signal)
93	D7–D0 (Read-only)	Gain applied by AGC

(1) All registers shown in this table are located on page 0.

Copyright © 2009, Texas Instruments Incorporated

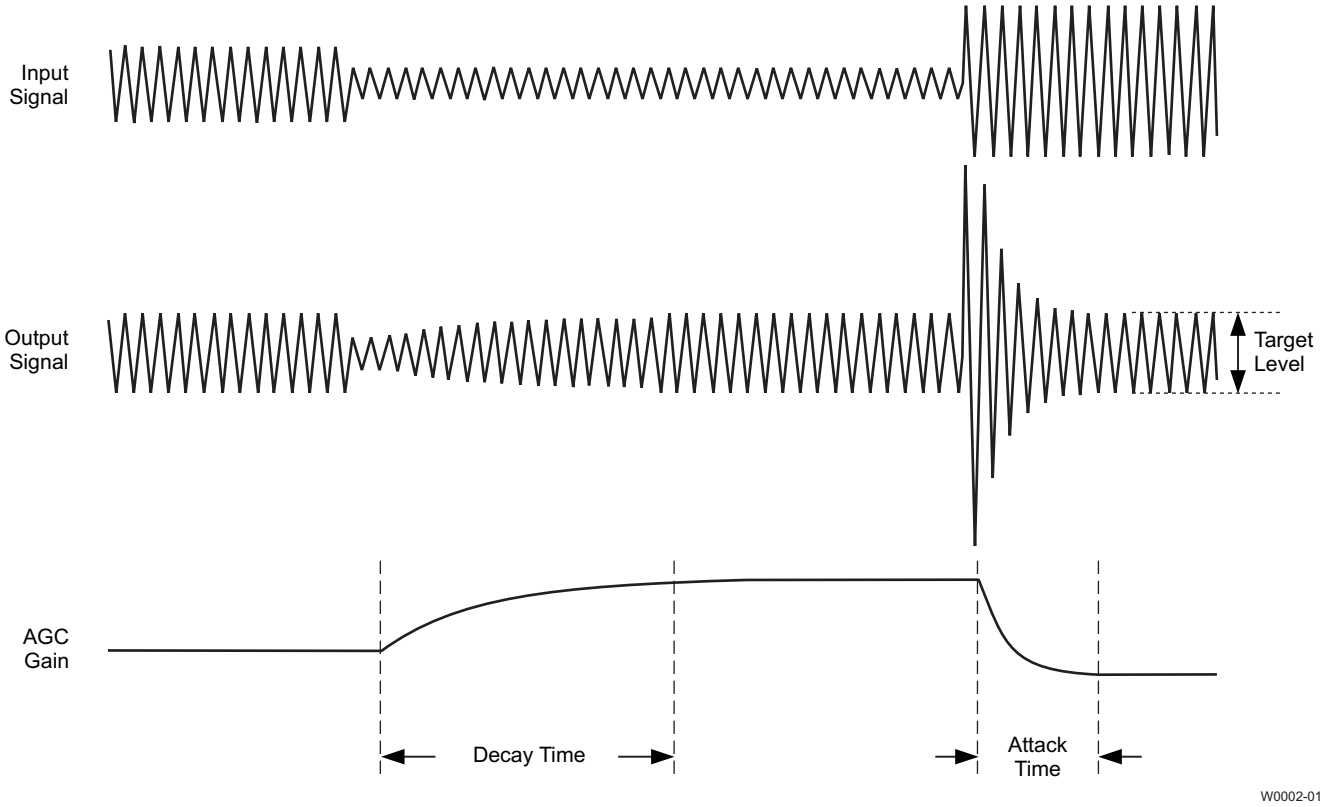

Figure 5-2. AGC Characteristics

The AGC settings should be set based on user and system conditions, such as microphone selection and sensitivity, acoustics (plastics) around the microphone which affect the microphone pattern, expected distance and direction between microphone and sound source, acoustic background noise, etc.

One example of AGC code follows, but actual use of code should be verified based on application usage. Note that the AGC code should be set up before powering up the ADC.

```
######################## AGC ENABLE EXAMPLE CODE ######################
## Switch to page 0
w 30 00 00
# Set AGC enable and Target Level = -10 dB
# Target level can be set lower if clipping occurs during speech
# Target level is adjusted considering Max Gain also
w 30 56 A0 # AGC hysteresis=DISABLE, noise threshold = -90dB
# Noise threshold should be set at higher level if noisy background is present in application
w 30 57 FE # AGC maximum gain= 40 dB
# Higher Max gain is a trade off between gaining up a low sensitivity MIC, and the background
# acoustic noise
# Microphone bias voltage (MICBIAS) level can be used to change the Microphone Sensitivity
w 30 58 50
# Attack time=864/Fs w 30 59 68
# Decay time=22016/Fs
w 30 5A A8
# Noise debounce 0 ms
# Noise debounce time can be increased if needed
w 30 5B 00
# Signal debounce 0 ms
# Signal debounce time can be increased if needed
w 30 5C 00
######################## END of AGC SET UP ###################################
```

5.4.3 Delta-Sigma ADC

The analog-to-digital converter has a delta-sigma modulator with an oversampling ratio (AOSR) up to 128. The ADC can support a maximum output rate of 192 kHz.

Copyright © 2009, Texas Instruments Incorporated

ADC power up is controlled by writing to page 0 / register 81, bit D7. An ADC power-up condition can be verified by reading page 0 / register 36, bit D6.

5.4.4 ADC Decimation Filtering and Signal Processing

The TLV320AIC3110 ADC channel includes built-in digital decimation filters to process the oversampled data from the delta-sigma modulator to generate digital data at the Nyquist sampling rate with high dynamic range. The decimation filter can be chosen from three different types, depending on the required frequency response, group delay, and sampling rate.

5.4.4.1 ADC Processing Blocks

The TLV320AIC3110 offers a range of processing blocks which implement various signal processing capabilities along with decimation filtering. These processing blocks give users the choice of how much and what type of signal processing they may use and which decimation filter is applied.

The choices among these processing blocks allow the system designer to balance power conservation and signal-processing flexibility. Less signal-processing capability reduces the power consumed by the device. Table 5-16 gives an overview of the available processing blocks of the ADC channel and their properties. The resource-class (RC) column gives an approximate indication of power consumption.

The signal processing blocks available are:

- First-order IIR
- Scalable number of biquad filters
- Variable-tap FIR filter
- AGC

The processing blocks are tuned for common cases and can achieve high anti-alias filtering or low group delay in combination with various signal-processing effects such as audio effects and frequency shaping. The available first-order IIR, biquad, and FIR filters have fully user-programmable coefficients.

Table 5-16. ADC Processing Blocks

Processing Blocks	Channel	Decimation Filter	First-Order IIR Available	Number of Biquads	FIR	Required AOSR Value	Resource Class
PRB_R4	Mono	A	Yes	0	No	128, 64	3
PRB_R5	Mono	A	Yes	5	No	128, 64	4
PRB_R6	Mono	A	Yes	0	25-tap	128, 64	4
PRB_R10	Mono	B	Yes	0	No	64	2
PRB_R11	Mono	B	Yes	3	No	64	2
PRB_R12	Mono	B	Yes	0	20-tap	64	2
PRB_R16	Mono	C	Yes	0	No	32	2
PRB_R17	Mono	C	Yes	5	No	32	2
PRB_R18	Mono	C	Yes	0	25-tap	32	2

Copyright © 2009, Texas Instruments Incorporated

5.4.4.2 ADC Processing Blocks – Signal Chain Details

5.4.4.2.1 First-Order IIR, AGC, Filter A

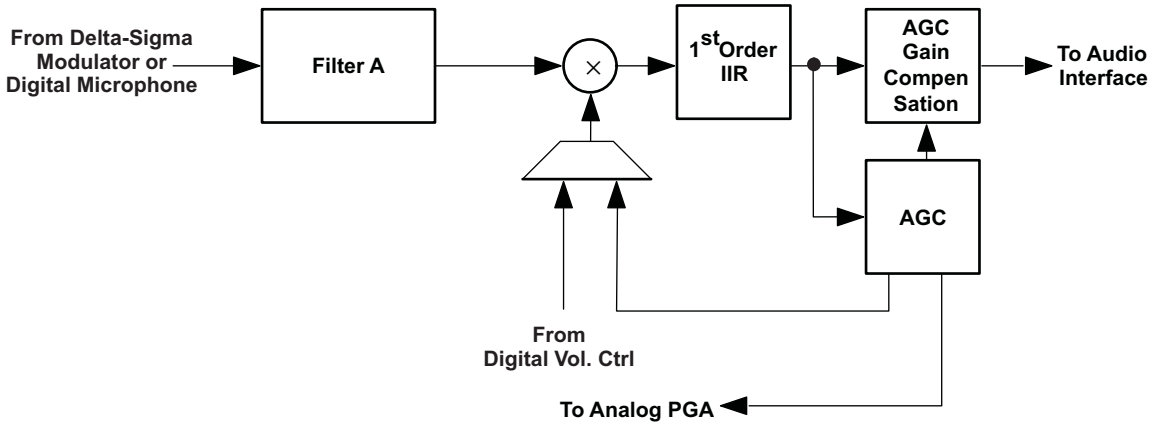

Figure 5-3. Signal Chain for PRB_R4

5.4.4.2.2 Five Biquads, First-Order IIR, AGC, Filter A

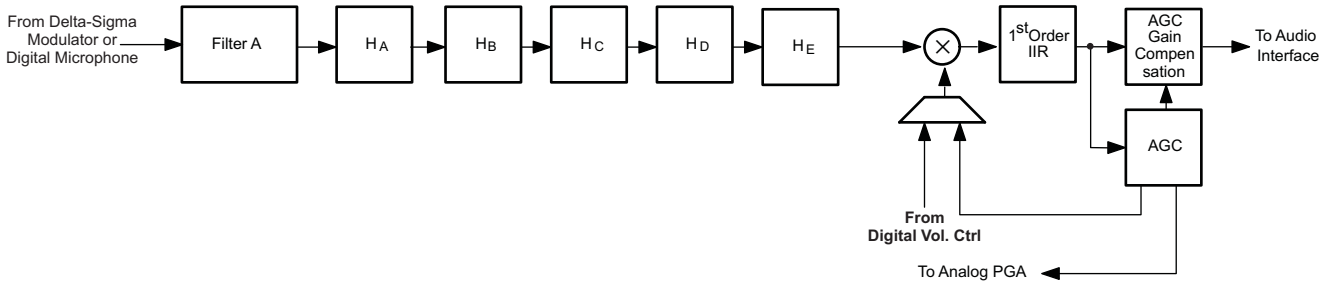

Figure 5-4. Signal Chain for PRB_R5

5.4.4.2.3 25-Tap FIR, First-Order IIR, AGC, Filter A

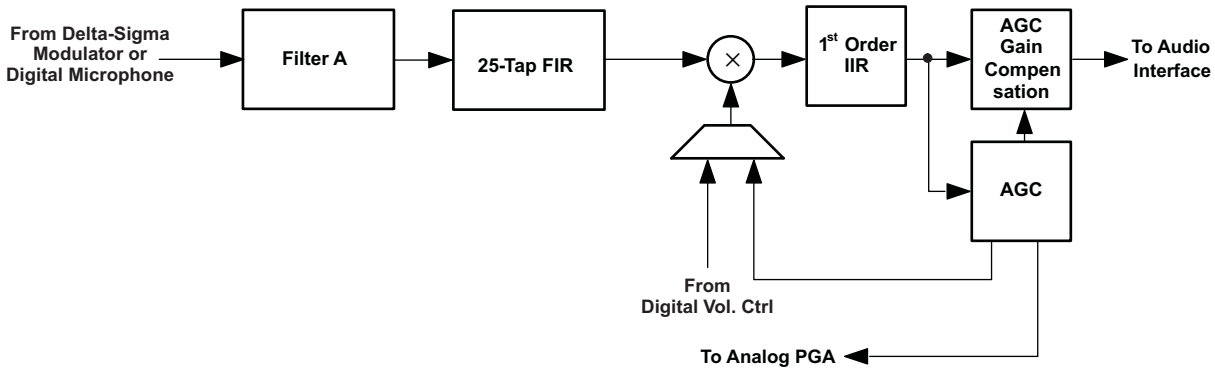

Figure 5-5. Signal Chain for PRB_R6

5.4.4.2.4 First-Order IIR, AGC, Filter B

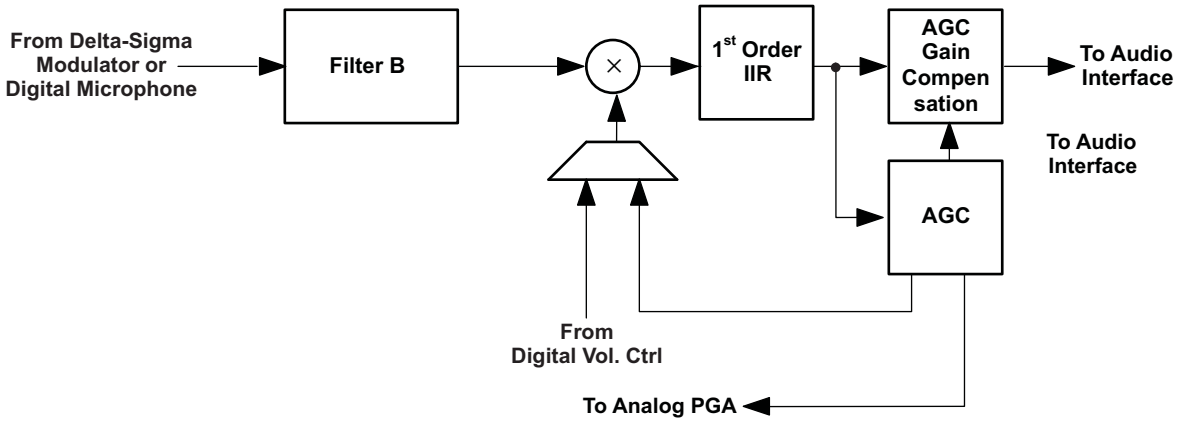

Figure 5-6. Signal Chain for PRB_R10

5.4.4.2.5 Three Biquads, First-Order IIR, AGC, Filter B

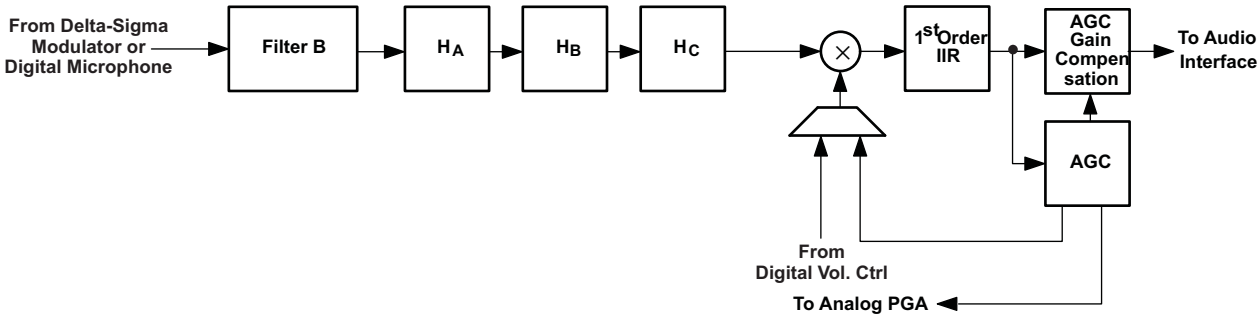

Figure 5-7. Signal Chain for PRB_R11

5.4.4.2.6 20-Tap FIR, First-Order IIR, AGC, Filter B

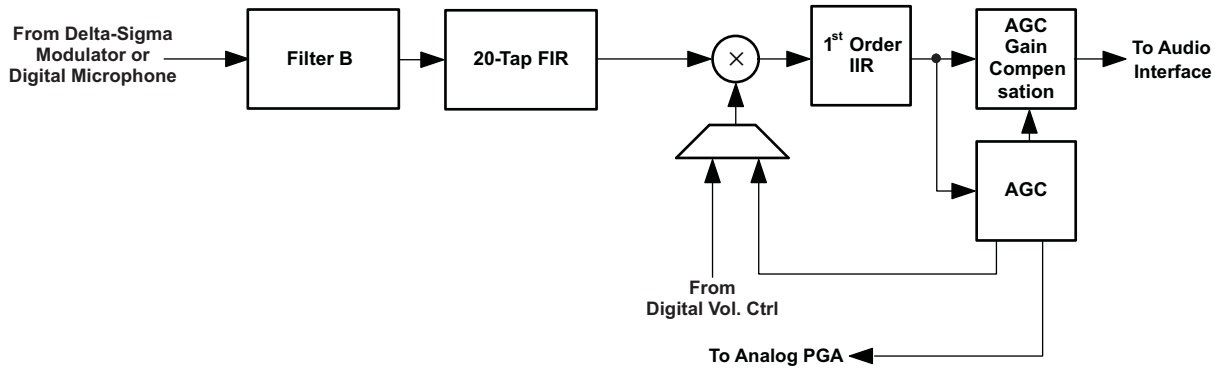

Figure 5-8. Signal Chain for PRB_R12

Copyright © 2009, Texas Instruments Incorporated

5.4.4.2.7 First-Order IIR, AGC, Filter C

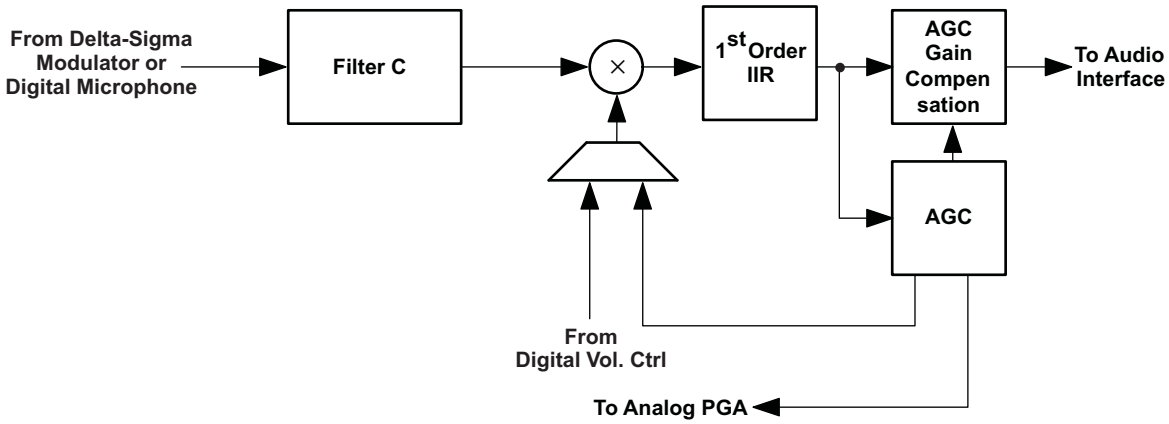

Figure 5-9. Signal Chain for PRB_R16

5.4.4.2.8 Five Biquads, First-Order IIR, AGC, Filter C

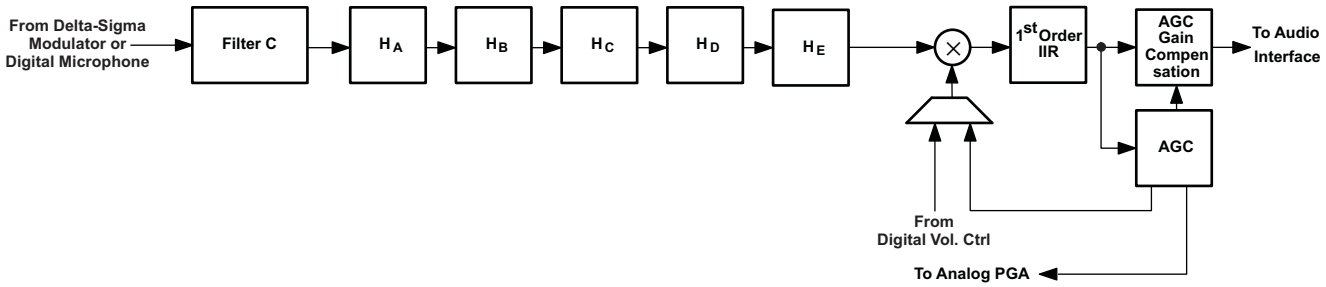

Figure 5-10. Signal Chain for PRB_R17

5.4.4.2.9 25-Tap FIR, First-Order IIR, AGC, Filter C

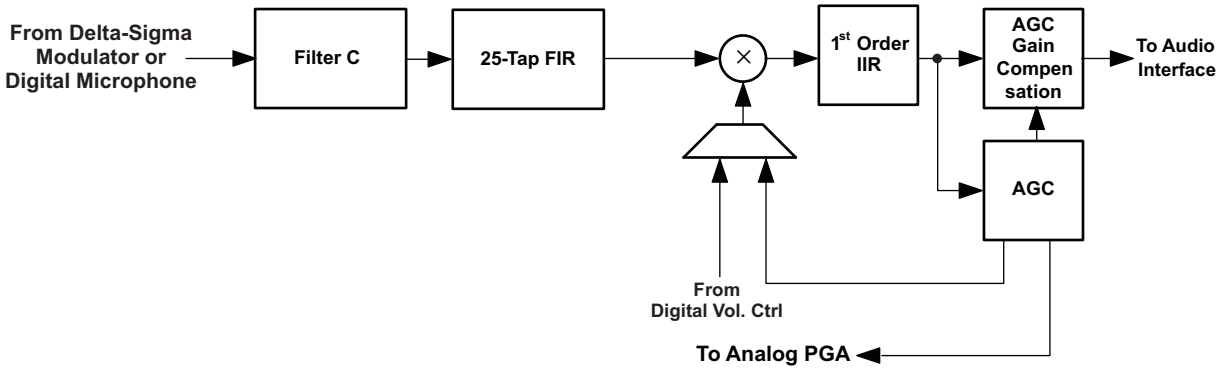

Figure 5-11. Signal Chain for PRB_R18

5.4.4.3 User-Programmable Filters

Depending on the selected processing block, different types and orders of digital filtering are available. A first-order IIR filter is always available, and is useful to filter out possible dc components of the signal efficiently. Up to five biquad sections or, alternatively, FIR filters of up to 25 taps are available for specific processing blocks. The coefficients of the available filters are arranged as sequentially indexed coefficients.

The coefficients of these filters are each 16 bits wide, in 2s-complement format, and occupy two consecutive 8-bit registers in the register space. Specifically, the filter coefficients are in 1.15 (one dot 15) format with a range from –1.0 (0x8000) to 0.999969482421875 (0x7FFF), as shown in Figure 5-12.

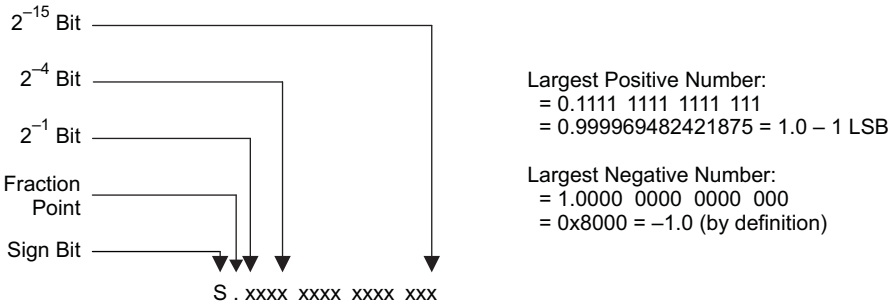

Figure 5-12. 1.15 2s-Complement Coefficient Format

5.4.4.3.1 First-Order IIR Section

The transfer function for the first-order IIR filter is given by

$$H(z) = \frac{N_0 + N_1 z^{-1}}{2^{15} - D_1 z^{-1}} \quad (1)$$

The frequency response for the first-order IIR section with default coefficients is flat at a gain of 0 dB.

Table 5-17. ADC First-Order IIR Filter Coefficients

Filter	Filter Coefficient	ADC Coefficient	Default (Reset) Values
First-order IIR	N0	Page 4 / register 8 and page 4 / register 9	0x7FFF (decimal 1.0 – LSB value)
	N1	Page 4 / register 10 and page 4 / register 11	0x0000
	D1	Page 4 / register 12 and page 4 / register 13	0x0000

5.4.4.3.2 Biquad Section

The transfer function of each of the biquad filters is given by

$$H(z) = \frac{N_0 + 2 \times N_1 z^{-1} + N_2 z^{-2}}{2^{15} - 2 \times D_1 z^{-1} - D_2 z^{-2}} \quad (2)$$

The default values for each biquad section yield an all-pass (flat) frequency response at a gain of 0 dB.

Copyright © 2009, Texas Instruments Incorporated

Table 5-18. ADC Biquad Filter Coefficients

Filter	Filter Coefficient	Filter Coefficient RAM Location	Default (Reset) Values
Biquad A	N0	Page 4 / register 14 and page 4 / register 15	0x7FFF (decimal 1.0 – LSB value)
	N1	Page 4 / register 16 and page 4 / register 17	0x0000
	N2	Page 4 / register 18 and page 4 / register 19	0x0000
	D1	Page 4 / register 20 and page 4 / register 21	0x0000
	D2	Page 4 / register 22 and page 4 / register 23	0x0000
Biquad B	N0	Page 4 / register 24 and page 4 / register 25	0x7FFF (decimal 1.0 – LSB value)
	N1	Page 4 / register 26 and page 4 / register 27	0x0000
	N2	Page 4 / register 28 and page 4 / register 29	0x0000
	D1	Page 4 / register 30 and page 4 / register 31	0x0000
	D2	Page 4 / register 32 and page 4 / register 33	0x0000
Biquad C	N0	Page 4 / register 34 and page 4 / register 35	0x7FFF (decimal 1.0 – LSB value)
	N1	Page 4 / register 36 and page 4 / register 37	0x0000
	N2	Page 4 / register 38 and page 4 / register 39	0x0000
	D1	Page 4 / register 40 and page 4 / register 41	0x0000
	D2	Page 4 / register 42 and page 4 / register 43	0x0000
Biquad D	N0	Page 4 / register 44 and page 4 / register 45	0x7FFF (decimal 1.0 – LSB value)
	N1	Page 4 / register 46 and page 4 / register 47	0x0000
	N2	Page 4 / register 48 and page 4 / register 49	0x0000
	D1	Page 4 / register 50 and page 4 / register 51	0x0000
	D2	Page 4 / register 52 and page 4 / register 53	0x0000
Biquad E	N0	Page 4 / register 54 and page 4 / register 55	0x7FFF (decimal 1.0 – LSB value)
	N1	Page 4 / register 56 and page 4 / register 57	0x0000
	N2	Page 4 / register 58 and page 4 / register 59	0x0000
	D1	Page 4 / register 60 and page 4 / register 61	0x0000
	D2	Page 4 / register 62 and page 4 / register 63	0x0000

Copyright © 2009, Texas Instruments Incorporated

5.4.4.3.3 FIR Section

Three of the available ADC processing blocks offer FIR filters for signal processing. Processing block PRB_R12 features a 20-tap FIR filter, whereas the processing blocks PRB_R6 and PRB_R18 feature a 25-tap FIR filter.

$$H(z) = \sum_{n=0}^{M} FIR_n z^{-n}$$

$$M = 24 \text{ for } PRB_R6, PRB_R18$$

$$M = 19 \text{ for } PRB_R12 \quad (3)$$

The coefficients of the FIR filters are 16-bit 2s-complement format (2 bytes each) and correspond to the ADC coefficient space as listed in Table 5-19. Note that the default (reset) coefficients are not vaild for the FIR filter. When the FIR filter is used, all applicable coefficients must be reprogrammed by the user. To reprogram the FIR filter coefficients as an all-pass filter, write value 0x00 to page 4 / register 24, page 4 / register 25, page 4 / register 34, page 4 / register 35, page 4 / register 44, page 4 / register 45, page 4 / register 54, and page 4 / register 55.

Table 5-19. ADC FIR Filter Coefficients

Filter Coefficient	FIlter Coefficient RAM Location	Default (Reset) Values – Not Valid for the FIR Filter – Must Be Reprogrammed by User
Fir0	Page 4 / register 14 and page 4 / register 15	0x7FFF (decimal 1.0 – LSB value)
Fir1	Page 4 / register 16 and page 4 / register 17	0x0000
Fir2	Page 4 / register 18 and page 4 / register 19	0x0000
Fir3	Page 4 / register 20 and page 4 / register 21	0x0000
Fir4	Page 4 / register 22 and page 4 / register 23	0x0000
Fir5	Page 4 / register 24 and page 4 / register 25	0x7FFF (decimal 1.0 – LSB value)
Fir6	Page 4 / register 26 and page 4 / register 27	0x0000
Fir7	Page 4 / register 28 and page 4 / register 29	0x0000
Fir8	Page 4 / register 30 and page 4 / register 31	0x0000
Fir9	Page 4 / register 32 and page 4 / register 33	0x0000
Fir10	Page 4 / register 34 and page 4 / register 35	0x7FFF (decimal 1.0 – LSB value)
Fir11	Page 4 / register 36 and page 4 / register 37	0x0000
Fir12	Page 4 / register 38 and page 4 / register 39	0x0000
Fir13	Page 4 / register 40 and page 4 / register 41	0x0000
Fir14	Page 4 / register 42 and page 4 / register 43	0x0000
Fir15	Page 4 / register 44 and page 4 / register 45	0x7FFF (decimal 1.0 – LSB value)
Fir16	Page 4 / register 46 and page 4 / register 47	0x0000

Copyright © 2009, Texas Instruments Incorporated

ADC FIR Filter Coefficients (continued)

Filter Coefficient	FIlter Coefficient RAM Location	Default (Reset) Values – Not Valid for the FIR Filter – Must Be Reprogrammed by User
Fir17	Page 4 / register 48 and page 4 / register 49	0x0000
Fir18	Page 4 / register 50 and page 4 / register 51	0x0000
Fir19	Page 4 / register 52 and page 4 / register 53	0x0000
Fir20	Page 4 / register 54 and page 4 / register 55	0x7FFF (decimal 1.0 – LSB value)
Fir21	Page 4 / register 56 and page 4 / register 57	0x0000
Fir22	Page 4 / register 58 and page 4 / register 59	0x0000
Fir23	Page 4 / register 60 and page 4 / register 61	0x0000
Fir24	Page 4 / register 62 and page 4 / register 63	0x0000

5.4.4.4 ADC Digital Decimation Filter Characteristics

The TLV320AIC3110 offers three different types of decimation filters. The integrated digital decimation filter removes high-frequency content and downsamples the audio data from an initial sampling rate of AOSR × f_S to the final output sampling rate of f_S. The decimation filtering is achieved using a higher-order CIC filter followed by linear-phase FIR filters. The decimation filter cannot be chosen by itself; it is implicitly set through the chosen processing block.

The following subsections describe the properties of the available filters A, B, and C.

5.4.4.4.1 Decimation Filter A

This filter is intended for use at sampling rates up to 48 kHz. When configuring this filter, the oversampling ratio of the ADC can either be 128 or 64. For highest performance, the oversampling ratio must be set to 128.

Filter A can also be used up to 96 kHz with an AOSR of 64.

Table 5-20. ADC Decimation Filter A, Specification

Parameter	Condition	Value (Typical)	Unit
AOSR = 128			
Filter gain pass band	0 … 0.39 f_S	0.062	dB
Filter gain stop band	0.55 … 64 f_S	–73	dB
Filter group delay		17/f_S	s
Pass-band ripple, 8 ksps	0 … 0.39 f_S	0.062	dB
Pass-band ripple, 44.1 ksps	0 … 0.39 f_S	0.05	dB
Pass-band ripple, 48 ksps	0 … 0.39 f_S	0.05	dB
AOSR = 64			
Filter gain pass band	0 … 0.39 f_S	0.062	dB
Filter gain stop band	0.55 … 32 f_S	–73	dB
Filter group delay		17/f_S	s
Pass-band ripple, 8 ksps	0 … 0.39 f_S	0.062	dB
Pass-band ripple, 44.1 ksps	0 … 0.39 f_S	0.05	dB
Pass-band ripple, 48 ksps	0 … 0.39 f_S	0.05	dB
Pass-band ripple, 96 ksps	0 … 20 kHz	0.1	dB

Copyright © 2009, Texas Instruments Incorporated

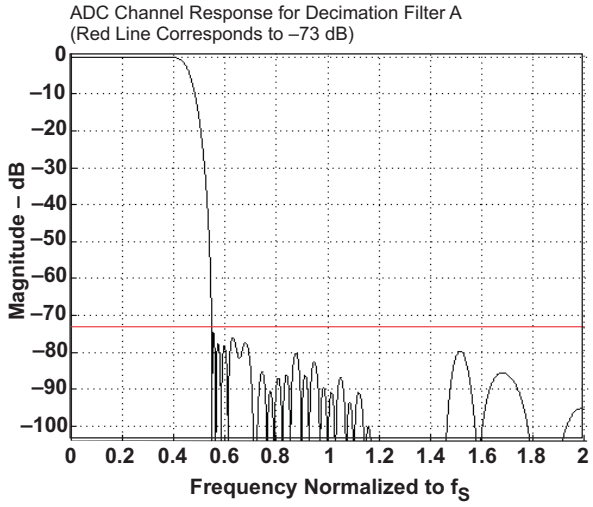

Figure 5-13. ADC Decimation Filter A, Frequency Response

5.4.4.4.2 Decimation Filter B

Filter B is intended to support sampling rates up to 96 kHz at an oversampling ratio of 64.

Table 5-21. ADC Decimation Filter B, Specifications

Parameter	Condition	Value (Typical)	Unit
AOSR = 64			
Filter gain pass band	0 … 0.39 f_S	±0.077	dB
Filter gain stop band	0.60 f_S … 32 f_S	–46	dB
Filter group delay		11/f_S	s
Pass-band ripple, 8 ksps	0 … 0.39 f_S	0.076	dB
Pass-band ripple, 44.1 ksps	0 … 0.39 f_S	0.06	dB
Pass-band ripple, 48 ksps	0 … 0.39 f_S	0.06	dB
Pass-band ripple, 96 ksps	0 … 20 kHz	0.11	dB

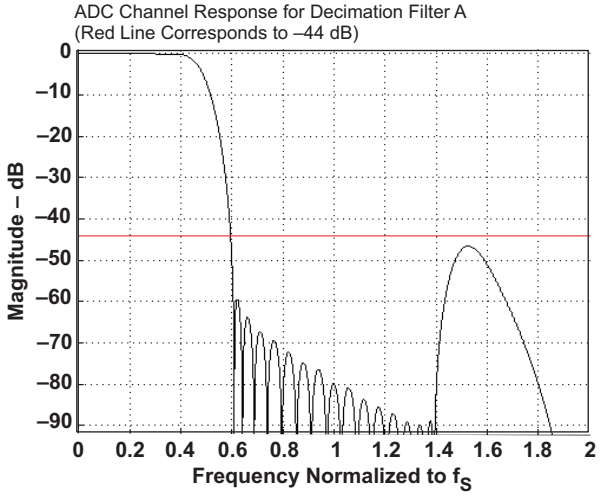

Figure 5-14. ADC Decimation Filter B, Frequency Response

Copyright © 2009, Texas Instruments Incorporated

5.4.4.4.3 Decimation Filter C

Filter C along with an AOSR of 32 is specially designed for 192-ksps operation of the ADC. The pass band, which extends up to 0.11 × f_S (corresponding to 21 kHz), is suited for audio applications.

Table 5-22. ADC Decimation Filter C, Specifications

Parameter	Condition	Value (Typical)	Unit
Filter gain from 0 to 0.11 f_S	0 … 0.11 f_S	±0.033	dB
Filter gain from 0.28 f_S to 16 f_S	0.28 f_S … 16 f_S	–60	dB
Filter group delay		11/f_S	s
Pass-band ripple, 8 ksps	0 … 0.11 f_S	0.033	dB
Pass-band ripple, 44.1 ksps	0 … 0.11 f_S	0.033	dB
Pass-band ripple, 48 ksps	0 … 0.11 f_S	0.032	dB
Pass-band ripple, 96 ksps	0 … 0.11 f_S	0.032	dB
Pass-band ripple, 192 ksps	0 … 20 kHz	0.086	dB

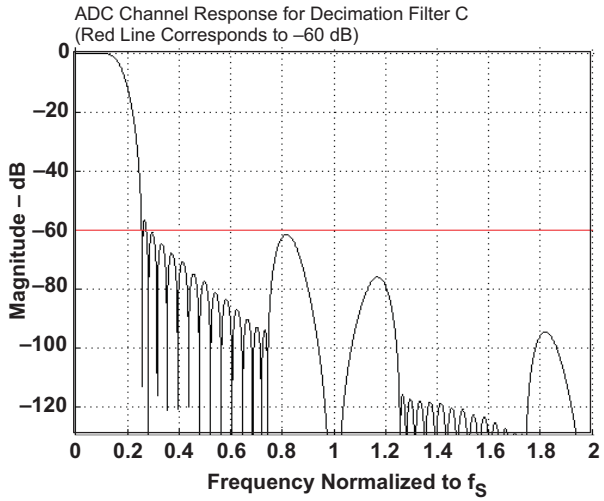

Figure 5-15. ADC Decimation Filter C, Frequency Response

5.4.4.5 ADC Data Interface

The decimation filter and signal-processing block in the ADC channel passes 32-bit data words to the audio serial interface once every cycle of ADC_f_S. During each cycle of ADC_f_S, a pair of data words (for left and right channels) is passed. The audio serial interface rounds the data to the required word length of the interface before converting to serial data. Because the TLV320AIC3110 has only a mono ADC, it passes the same data to both the left and right channels of the audio serial interface.

5.4.5 Updating ADC Digital Filter Coefficients During Record

When it is required to update the ADC digital filter coefficients during record, care must be taken to avoid click and pop noise or even a possible oscillation noise. These artifacts can occur if the ADC coefficients are updated without following the proper update sequence. The correct sequence is shown in Figure 5-16. The values for the times listed are conservative and should be used for software purposes.

Copyright © 2009, Texas Instruments Incorporated

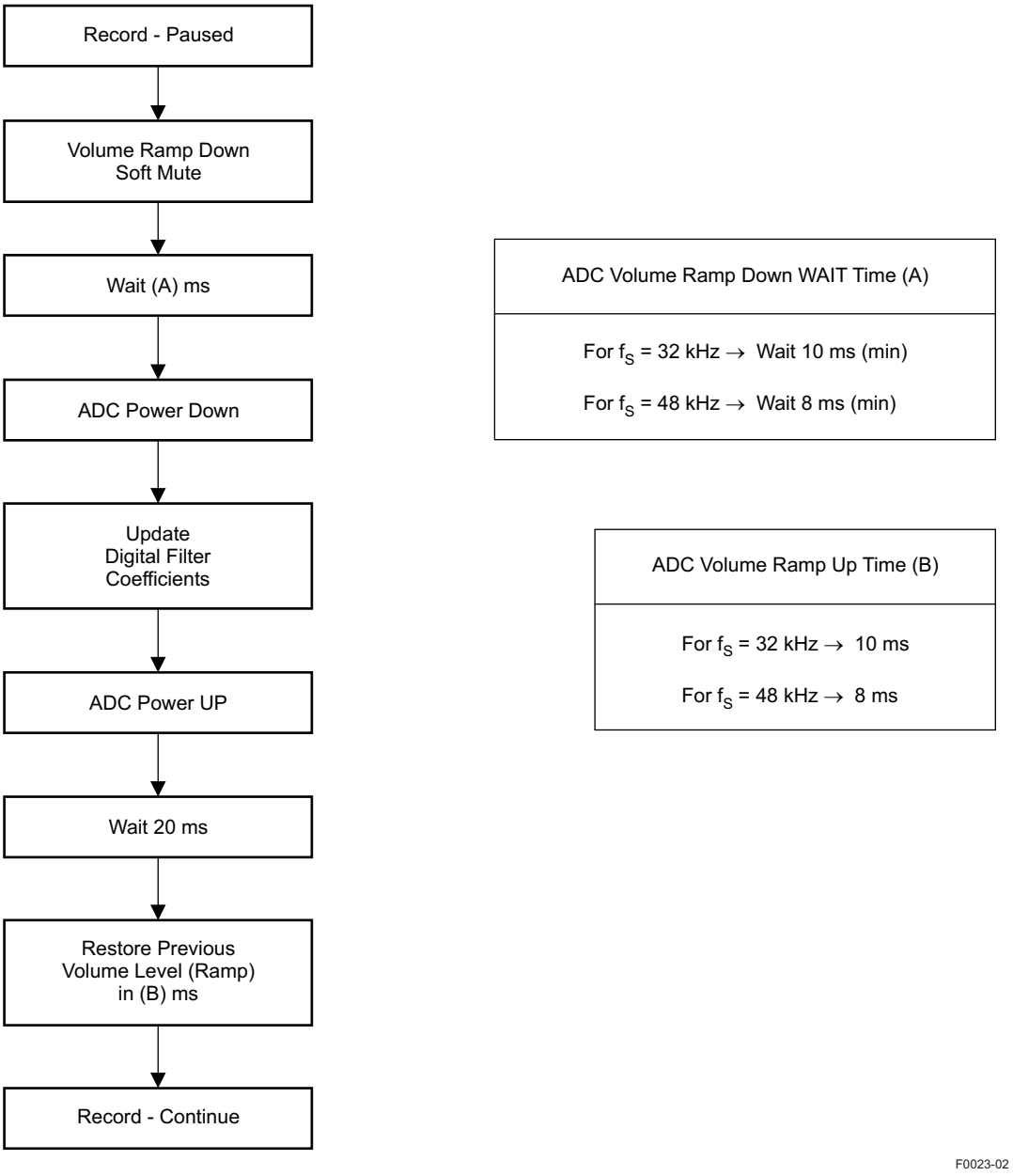

Figure 5-16. Updating ADC Digital Filter Coefficients During Record

5.4.6 Digital Microphone Function

In addition to supporting analog microphones, the TLV320AIC3110 can also interface to one digital microphone using using the mono ADC channel. Figure 5-17 shows the digial microphone interface block diagram and Figure 5-18 shows the timing diagram for the digital microphone interface.

Copyright © 2009, Texas Instruments Incorporated

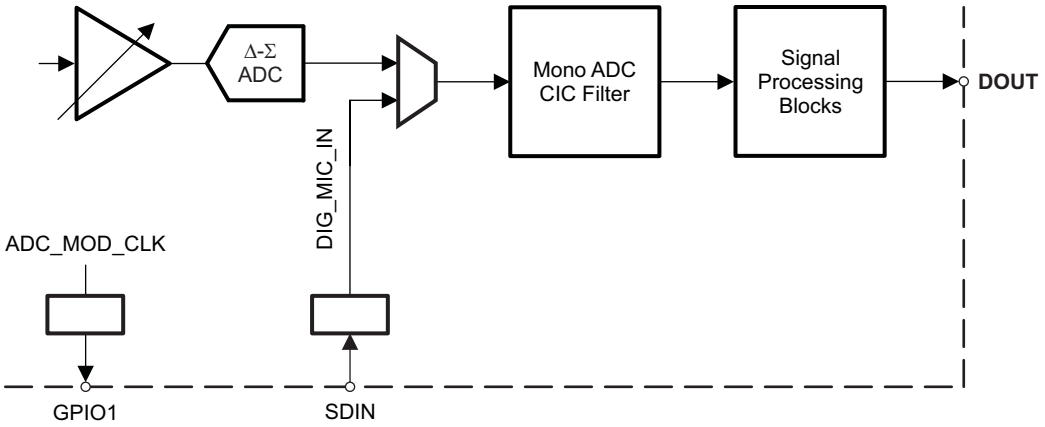

Figure 5-17. Digital Microphone in the TLV320AIC3110

The TLV320AIC3110 outputs internal clock ADC_MOD_CLK on the GPIO1 pin (page 0 / register 51, bits D5–D2 = 1010). This clock can be connected to the external digital microphone device. The single-bit output of the external digital microphone device can be connected to the DIN pin. Internally, the TLV320AIC3110 latches the steady value of the mono ADC data on the rising edge of ADC_MOD_CLK.

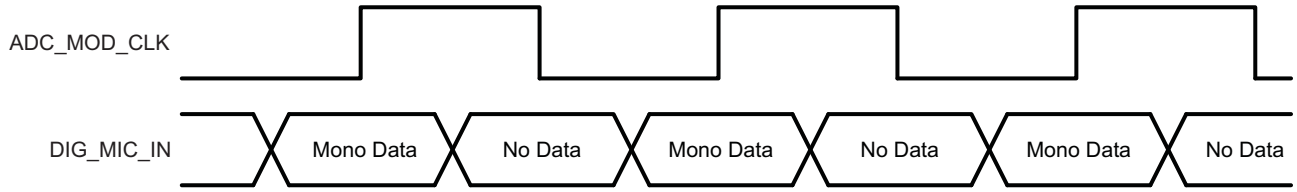

Figure 5-18. Timing Diagram for Digital Microphone Interface

When the digital microphone mode is enabled, the analog section of the ADC can be powered down and bypassed for power efficiency. The AOSR value for the ADC channel must be configured to select the desired decimation ratio to be achieved, based on the external digital microphone properties.

5.4.7 DC Measurement

The TLV320AIC3110 supports a highly flexible dc measurement feature using the high-resolution oversampling and noise-shaping ADC. This mode can be used when the ADC channel is not used for the voice/audio record function. This mode can be enabled by programming page 0 / register 102, bit D7. The converted data is 24 bits, using the 2.22 numbering format. The value of the converted data for the ADC channel can be read back from page 0 / register 104 through page 0 / register 106. Before reading back the converted data, page 0 / register 103, bit D6 must be programmed to 1 in order to latch the converted data into the read-back registers. After the converted data is read back, page 0 / register 103, bit D6 must be immediately reset to 0. In dc-measurement mode, two measurement modes are supported.

Mode A

In dc-measurement mode A, a variable-length averaging filter is used. The length of averaging filter D can be programmed from 1 to 20 by programming page 0 / register 102, bits D4–D0. To choose mode A, page 0 / register 102, bit D5 must be programmed to 0.

Copyright © 2009, Texas Instruments Incorporated

Mode B

To choose mode B, page 0 / register 102, bit D5 must be programmed to 1. In dc-measurement mode B, a first-order IIR filter is used. The coefficients of this filter are determined by D, page 0 / register 102, bits D4–D0. The nature of the filter is given in Table 5-23.

Table 5-23. DC Measurement Bandwidth Settings

D:Page 0 / register 102, Bits D4–D0	–3 dB BW (kHz)	–0.5 dB BW (kHz)
1	688.44	236.5
2	275.97	96.334
3	127.4	44.579
4	61.505	21.532
5	30.248	10.59
6	15.004	5.253
7	7.472	2.616
8	3.729	1.305
9	1.862	652
10	931	326
11	465	163
12	232.6	81.5
13	116.3	40.7
14	58.1	20.3
15	29.1	10.2
16	14.54	5.09
17	7.25	2.54
18	3.63	1.27
19	1.8	0.635
20	0.908	0.3165

By programming page 0 / register 103, bit D5 to 1, the averaging filter is periodically reset after 2^R number of ADC_MOD_CLK periods, where R is programmed in page 0 / register 103, bits D4–D0. When page 0 / register 103, bit D5 is set to 1, then the value of D should be less than the value of R. When page 0 / register 103, bit D5 is programmed to 0, the averaging filter is never reset.

5.5 Audio DAC and Audio Analog Outputs

Each channel of the stereo audio DAC consists of a digital audio processing block, a digital interpolation filter, a digital delta-sigma modulator, and an analog reconstruction filter. This high oversampling ratio (normally DOSR is between 32 and 128) exhibits good dynamic range by ensuring that the quantization noise generated within the delta-sigma modulator stays outside of the audio frequency band. Audio analog outputs include stereo headphone/lineouts and stereo class-D speaker outputs.

5.5.1 DAC

The TLV320AIC3110 stereo audio DAC supports data rates from 8 kHz to 192 kHz. Each channel of the stereo audio DAC consists of a signal-processing engine with fixed processing blocks, a digital interpolation filter, multibit digital delta-sigma modulator, and an analog reconstruction filter. The DAC is designed to provide enhanced performance at low sampling rates through increased oversampling and image filtering, thereby keeping quantization noise generated within the delta-sigma modulator and signal

Copyright © 2009, Texas Instruments Incorporated

images strongly suppressed within the audio band to beyond 20 kHz. To handle multiple input rates and optimize power dissipation and performance, the TLV320AIC3110 allows the system designer to program the oversampling rates over a wide range from 1 to 1024 by configuring page 0 / register 13 and page 0 / register 14. The system designer can choose higher oversampling ratios for lower input data rates and lower oversampling ratios for higher input data rates.

The TLV320AIC3110 DAC channel includes a built-in digital interpolation filter to generate oversampled data for the delta-sigma modulator. The interpolation filter can be chosen from three different types, depending on required frequency response, group delay, and sampling rate.

DAC power up is controlled by writing to page 0 / register 63, bit D7 for the left channel and bit D6 for the right channel. The left-channel DAC clipping flag is provided as a read-only bit on page 0 / register 39, bit D7. The right-channel DAC clipping flag is provided as a read-only bit on page 0 / register 39, bit D6.

5.5.1.1 DAC Processing Blocks

The TLV320AIC3110 implements signal-processing capabilities and interpolation filtering via processing blocks. These fixed processing blocks give users the choice of how much and what type of signal processing they may use and which interpolation filter is applied.

The choices among these processing blocks allow the system designer to balance power conservation and signal-processing flexibility. Table 5-24 gives an overview of all available processing blocks of the DAC channel and their properties. The resource-class column gives an approximate indication of power consumption for the digital (DVDD) supply; however, based on the out-of-band noise spectrum, the analog power consumption of the drivers (HPVDD) may differ.

The signal processing blocks available are:

- First-order IIR
- Scalable number of biquad filters
- 3D effect
- Digital sine-wave (beep) generator

The processing blocks are tuned for common cases and can achieve high image rejection or low group delay in combination with various signal processing effects such as audio effects and frequency shaping. The available first-order IIR and biquad filters have fully user-programmable coefficients.

Copyright © 2009, Texas Instruments Incorporated

Table 5-24. Overview – DAC Predefined Processing Blocks

Processing Block No.	Interpolation Filter	Channel	First-Order IIR Available	Number of Biquads	DRC	3D	Beep Generator	Resource Class
PRB_P1	A	Stereo	No	3	No	No	No	8
PRB_P2	A	Stereo	Yes	6	Yes	No	No	12
PRB_P3	A	Stereo	Yes	6	No	No	No	10
PRB_P4	A	Left	No	3	No	No	No	4
PRB_P5	A	Left	Yes	6	Yes	No	No	6
PRB_P6	A	Left	Yes	6	No	No	No	6
PRB_P7	B	Stereo	Yes	0	No	No	No	6
PRB_P8	B	Stereo	No	4	Yes	No	No	8
PRB_P9	B	Stereo	No	4	No	No	No	8
PRB_P10	B	Stereo	Yes	6	Yes	No	No	10
PRB_P11	B	Stereo	Yes	6	No	No	No	8
PRB_P12	B	Left	Yes	0	No	No	No	3
PRB_P13	B	Left	No	4	Yes	No	No	4
PRB_P14	B	Left	No	4	No	No	No	4
PRB_P15	B	Left	Yes	6	Yes	No	No	6
PRB_P16	B	Left	Yes	6	No	No	No	4
PRB_P17	C	Stereo	Yes	0	No	No	No	3
PRB_P18	C	Stereo	Yes	4	Yes	No	No	6
PRB_P19	C	Stereo	Yes	4	No	No	No	4
PRB_P20	C	Left	Yes	0	No	No	No	2
PRB_P21	C	Left	Yes	4	Yes	No	No	3
PRB_P22	C	Left	Yes	4	No	No	No	2
PRB_P23	A	Stereo	No	2	No	Yes	No	8
PRB_P24	A	Stereo	Yes	5	Yes	Yes	No	12
PRB_P25	A	Stereo	Yes	5	Yes	Yes	Yes	12

5.5.1.2 DAC Processing Blocks – Signal Chain Details

5.5.1.2.1 Three Biquads, Filter A

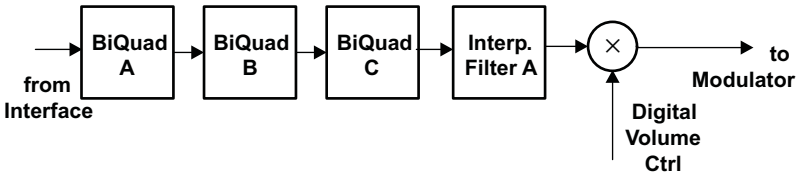

Figure 5-19. Signal Chain for PRB_P1 and PRB_P4

5.5.1.2.2 Six Biquads, First-Order IIR, DRC, Filter A or B

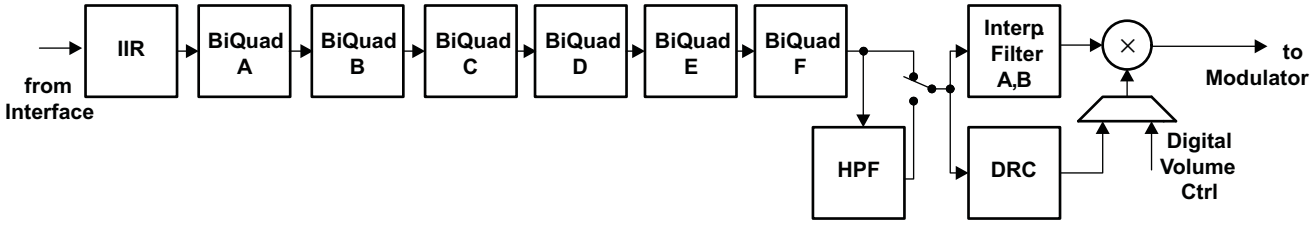

Figure 5-20. Signal Chain for PRB_P2, PRB_P5, PRB_P10, and PRB_P15

Copyright © 2009, Texas Instruments Incorporated

5.5.1.2.3 Six Biquads, First-Order IIR, Filter A or B

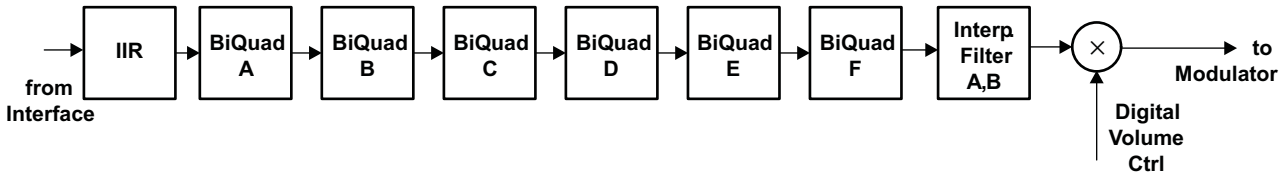

Figure 5-21. Signal Chain for PRB_P3, PRB_P6, PRB_P11, and PRB_P16

5.5.1.2.4 IIR, Filter B or C

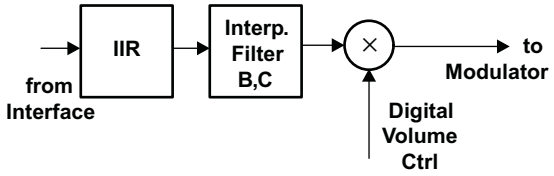

Figure 5-22. Signal Chain for PRB_P7, PRB_P12, PRB_P17, and PRB_P20

5.5.1.2.5 Four Biquads, DRC, Filter B

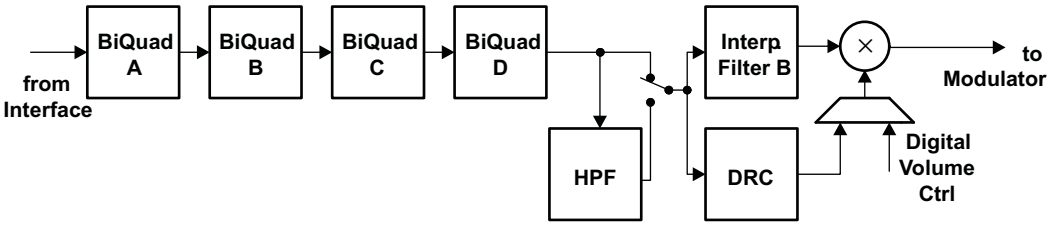

Figure 5-23. Signal Chain for PRB_P8 and PRB_P13

5.5.1.2.6 Four Biquads, Filter B

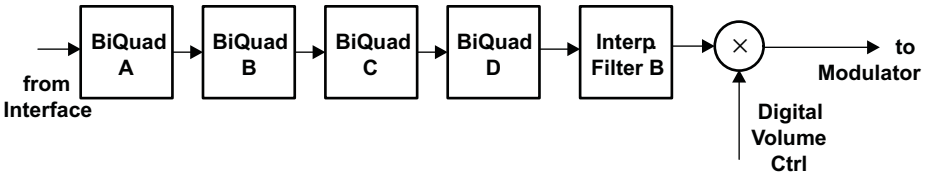

Figure 5-24. Signal Chain for PRB_P9 and PRB_P14

5.5.1.2.7 Four Biquads, First-Order IIR, DRC, Filter C

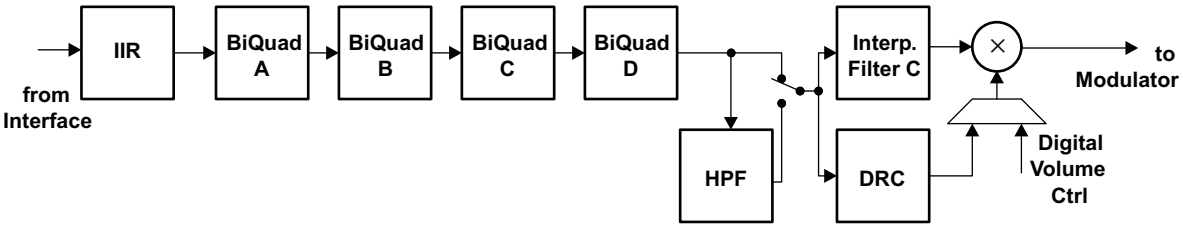

Figure 5-25. Signal Chain for PRB_P18 and PRB_P21

5.5.1.2.8 Four Biquads, First-Order IIR, Filter C

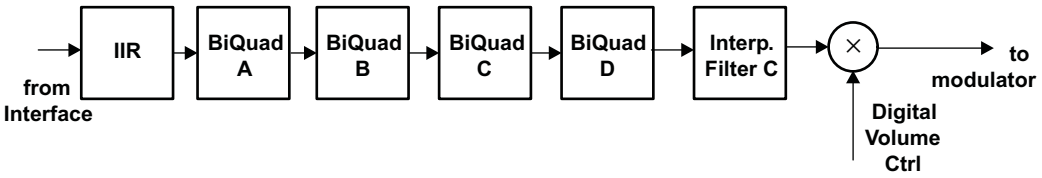

Figure 5-26. Signal Chain for PRB_P19 and PRB_P22

5.5.1.2.9 Two Biquads, 3D, Filter A

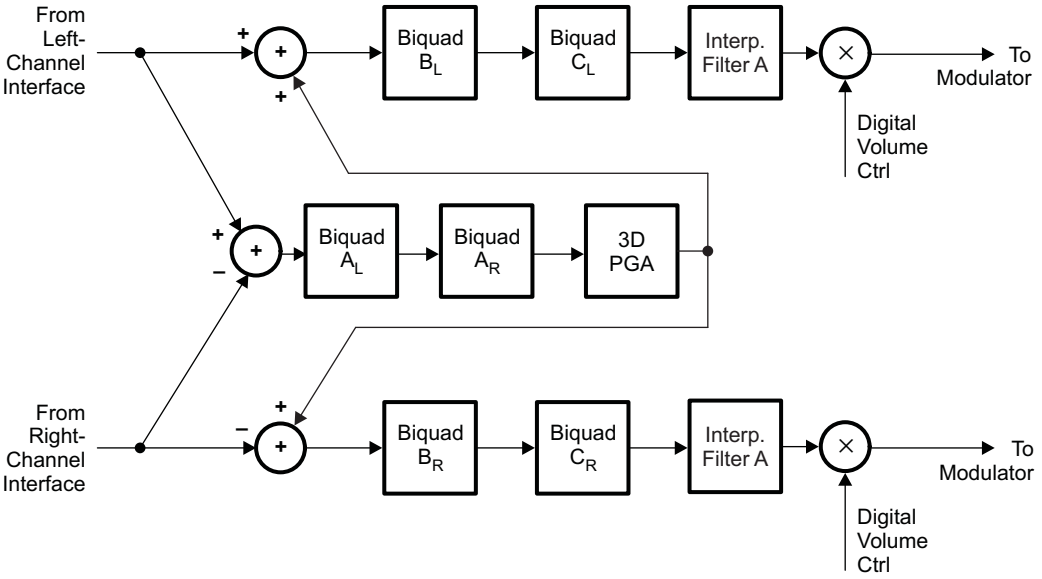

NOTE: A_L means biquad A of the left channel, and similarly, B_R means biquad B of the right channel.

Figure 5-27. Signal Chain for PRB_P23

Copyright © 2009, Texas Instruments Incorporated

5.5.1.2.10 Five Biquads, DRC, 3D, Filter A

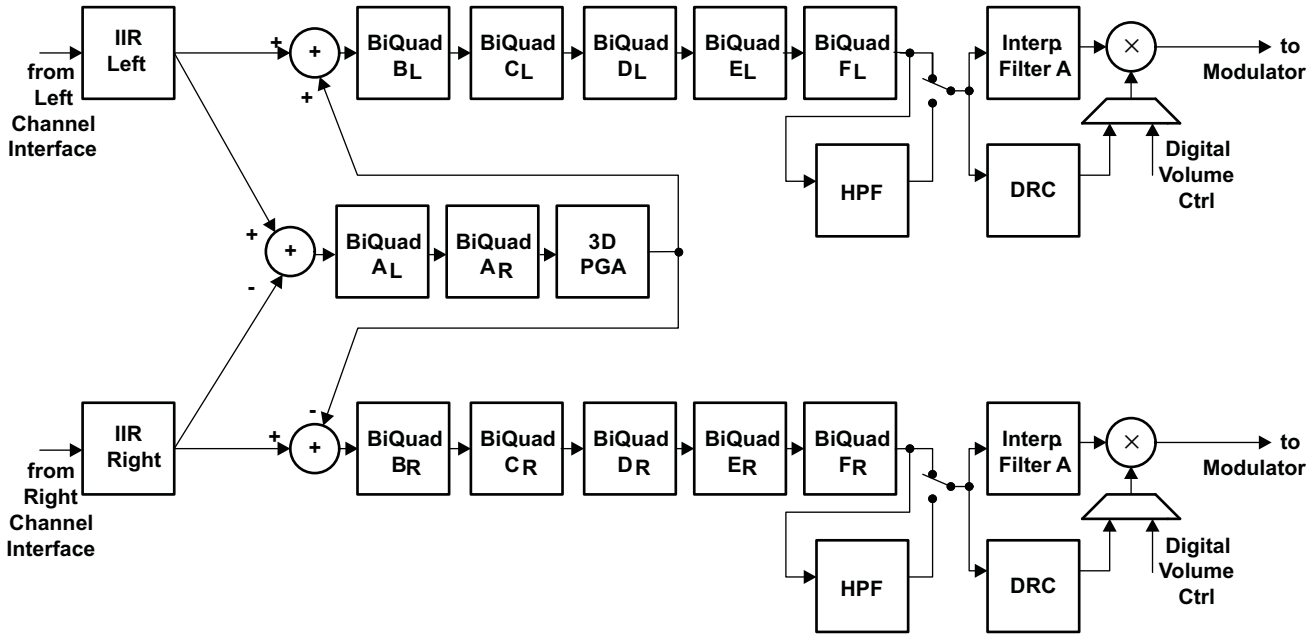

Figure 5-28. Signal Chain for PRB_P24

5.5.1.2.11 Five Biquads, DRC, 3D, Beep Generator, Filter A

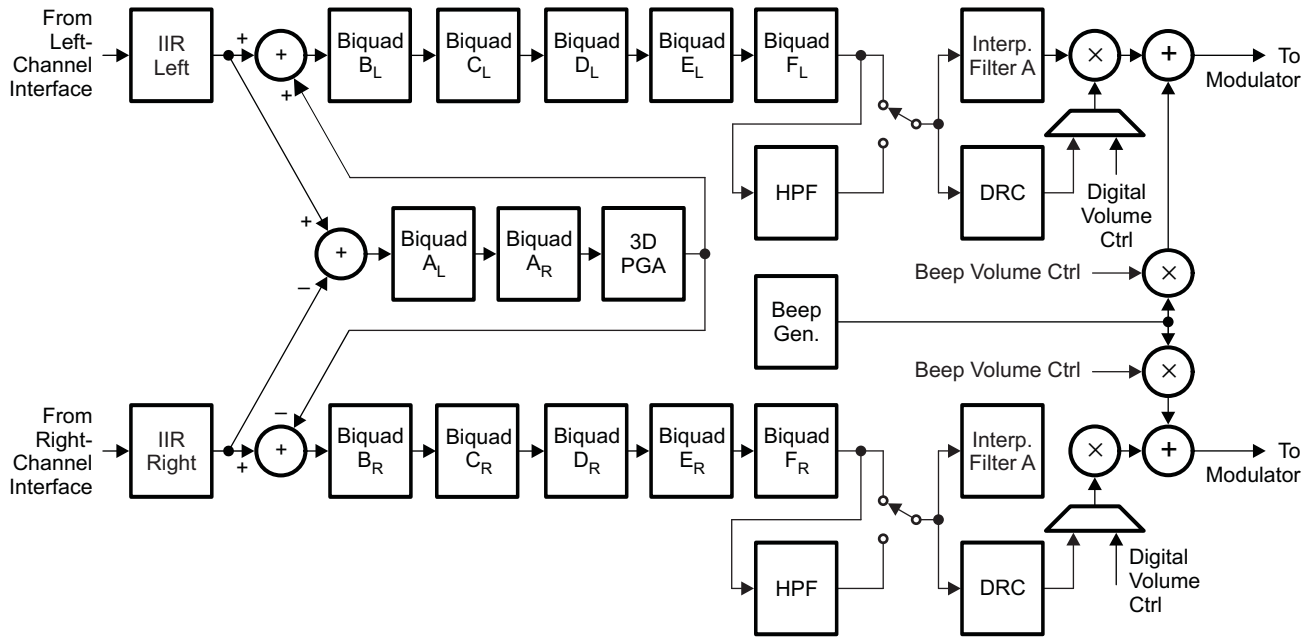

Figure 5-29. Signal Chain for PRB_P25

5.5.1.3 DAC User-Programmable Filters

Depending on the selected processing block, different types and orders of digital filtering are available. Up to six biquad sections are available for specific processing blocks.

The coefficients of the available filters are arranged as sequentially-indexed coefficients in two banks. If adaptive filtering is chosen, the coefficient banks can be switched in real time.

When the DAC is running, the user-programmable filter coefficients are locked and cannot be accessed for either read or write.

However, the TLV320AIC3110 offers an adaptive filter mode as well. Setting page 8 / register 1, bit D2 = 1 turns on double-buffering of the coefficients. In this mode, filter coefficients can be updated through the host and activated without stopping and restarting the DAC. This enables advanced adaptive filtering applications.

In the double-buffering scheme, all coefficients are stored in two buffers (buffers A and B). When the DAC is running and adaptive filtering mode is turned on, setting page 8 / register 1, bit D0 = 1 switches the coefficient buffers at the next start of a sampling period. This bit is set back to 0 after the switch occurs. At the same time, page 8 / register 1, bit D1 toggles.

The flag in page 8 / register 1, bit D1 indicates which of the two buffers is actually in use.

Page 8 / register 1, bit D1 = 0: buffer A is in use by the DAC engine; bit D1 = 1: buffer B is in use.

While the device is running, coefficient updates are always made to the buffer not in use by the DAC, regardless of the buffer to which the coefficients have been written.

Table 5-25. Adaptive-Mode Filter-Coefficient Buffer Switching

DAC Powered Up	Page 8, Reg 1, Bit D1	Coefficient Buffer in Use	I^2C Writes to	Updates
No	0	None	Page 8, Reg 2–3, buffer A	Page 8, Reg 2–3, buffer A
No	0	None	Page 12, Reg 2–3, buffer B	Page 12, Reg 2–3, buffer B
Yes	0	Buffer A	Page 8, Reg 2–3, buffer A	Page 12, Reg 2–3, buffer B
Yes	0	Buffer A	Page 12, Reg 2–3, buffer B	Page 12, Reg 2–3, buffer B
Yes	1	Buffer B	Page 8, Reg 2–3, buffer A	Page 8, Reg 2–3, buffer A
Yes	1	Buffer B	Page 12, Reg 2–3, buffer B	Page 8, Reg 2–3, buffer A

The user-programmable coefficients for the DAC Processing Blocks are defined on pages 8 and 9 for buffer A and pages 12 and 13 for buffer B.

The coefficients of these filters are each 16-bit, 2s-complement format, occupying two consecutive 8-bit registers in the register space. Specifically, the filter coefficients are in 1.15 (one dot 15) format with a range from –1.0 (0x8000) to 0.999969482421875 (0x7FFF) as shown in Figure 5-12.

5.5.1.3.1 First-Order IIR Section

The IIR is of first order and its transfer function is given by

$$H(z) = \frac{N_0 + N_1 z^{-1}}{2^{15} - D_1 z^{-1}} \quad (4)$$

The frequency response for the first-order IIR section with default coefficients is flat.

Copyright © 2009, Texas Instruments Incorporated

Table 5-26. DAC IIR Filter Coefficients

Filter	Filter Coefficient	DAC Coefficient, Left Channel	DAC Coefficient, Right Channel	Default (Reset) Values
First-order IIR	N0	Page 9 / register 2 and page 9 / register 3	Page 9 / register 8 and page 9 / register 9	0x7FFF (decimal 1.0 – LSB value)
	N1	Page 9 / register 4 and page 9 / register 5	Page 9 / register 10 and page 9 / register 11	0x0000
	D1	Page 9 / register 6 and page 9 / register 7	Page 9 / register 12 and page 9 / register 13	0x0000

5.5.1.3.2 Biquad Section

The transfer function of each of the biquad filters is given by

$$H(z) = \frac{N_0 + 2 \times N_1 z^{-1} + N_2 z^{-2}}{2^{15} - 2 \times D_1 z^{-1} - D_2 z^{-2}} \quad (5)$$

Table 5-27. DAC Biquad Filter Coefficients

Filter	Coefficient	Left DAC Channel	Right DAC Channel	Default (Reset) Values
Biquad A	N0	Page 8 / register 2 and page 8 / register 3	Page 8 / register 66 and page 8 / register 67	0x7FFF (decimal 1.0 – LSB value)
	N1	Page 8 / register 4 and page 8 / register 5	Page 8 / register 68 and page 8 / register 69	0x0000
	N2	Page 8 / register 6 and page 8 / register 7	Page 8 / register 70 and page 8 / register 71	0x0000
	D1	Page 8 / register 8 and page 8 / register 9	Page 8 / register 72 and page 8 / register 73	0x0000
	D2	Page 8 / register 10 and page 8 / register 11	Page 8 / register 74 and page 8 / register 75	0x0000
Biquad B	N0	Page 8 / register 12 and page 8 / register 13	Page 8 / register 76 and page 8 / register 77	0x7FFF (decimal 1.0 – LSB value)
	N1	Page 8 / register 14 and page 8 / register 15	Page 8 / register 78 and page 8 / register 79	0x0000
	N2	Page 8 / register 16 and page 8 / register 17	Page 8 / register 80 and page 8 / register 81	0x0000
	D1	Page 8 / register 18 and page 8 / register 19	Page 8 / register 82 and page 8 / register 83	0x0000
	D2	Page 8 / register 20 and page 8 / register 21	Page 8 / register 84 and page 8 / register 85	0x0000
Biquad C	N0	Page 8 / register 22 and page 8 / register 23	Page 8 / register 86 and page 8 / register 87	0x7FFF (decimal 1.0 – LSB value)
	N1	Page 8 / register 24 and page 8 / register 25	Page 8 / register 88 and page 8 / register 89	0x0000
	N2	Page 8 / register 26 and page 8 / register 27	Page 8 / register 90 and page 8 / register 91	0x0000
	D1	Page 8 / register 28 and page 8 / register 29	Page 8 / register 92 and page 8 / register 93	0x0000
	D2	Page 8 / register 30 and page 8 / register 31	Page 8 / register 94 and page 8 / register 95	0x0000

Copyright © 2009, Texas Instruments Incorporated

DAC Biquad Filter Coefficients (continued)

Filter	Coefficient	Left DAC Channel	Right DAC Channel	Default (Reset) Values
Biquad D	N0	Page 8 / register 32 and page 8 / register 33	Page 8 / register 96 and page 8 / register 97	0x7FFF (decimal 1.0 – LSB value)
	N1	Page 8 / register 34 and page 8 / register 35	Page 8 / register 98 and page 8 / register 99	0x0000
	N2	Page 8 / register 36 and page 8 / register 37	Page 8 / register 100 and page 8 / register 101	0x0000
	D1	Page 8 / register 38 and page 8 / register 39	Page 8 / register 102 and page 8 / register 103	0x0000
	D2	Page 8 / register 40 and page 8 / register 41	Page 8 / register 104 and page 8 / register 105	0x0000
Biquad E	N0	Page 8 / register 42 and page 8 / register 43	Page 8 / register 106 and page 8 / register 107	0x7FFF (decimal 1.0 – LSB value)
	N1	Page 8 / register 44 and page 8 / register 45	Page 8 / register 108 and page 8 / register 109	0x0000
	N2	Page 8 / register 46 and page 8 / register 47	Page 8 / register 110 and page 8 / register 111	0x0000
	D1	Page 8 / register 48 and page 8 / register 49	Page 8 / register 112 and page 8 / register 113	0x0000
	D2	Page 8 / register 50 and page 8 / register 51	Page 8 / register 114 and page 8 / register 115	0x0000
Biquad F	N0	Page 8 / register 52 and page 8 / register 53	Page 8 / register 116 and page 8 / register 117	0x7FFF (decimal 1.0 – LSB value)
	N1	Page 8 / register 54 and page 8 / register 55	Page 8 / register 118 and page 8 / register 119	0x0000
	N2	Page 8 / register 56 and page 8 / register 57	Page 8 / register 120 and page 8 / register 121	0x0000
	D1	Page 8 / register 58 and page 8 / register 59	Page 8 / register 122 and page 8 / register 123	0x0000
	D2	Page 8 / register 60 and page 8 / register 61	Page 8 / register 124 and page 8 / register 125	0x0000

5.5.1.4 DAC Interpolation Filter Characteristics

5.5.1.4.1 Interpolation Filter A

Filter A is designed for an f_S up to 48 ksps with a flat pass band of 0 kHz–20 kHz.

Table 5-28. Specification for DAC Interpolation Filter A

Parameter	Condition	Value (Typical)	Unit
Filter-gain pass band	0 … 0.45 f_S	±0.015	dB
Filter-gain stop band	0.55 f_S … 7.455 f_S	–65	dB
Filter group delay		21/f_S	s

Copyright © 2009, Texas Instruments Incorporated

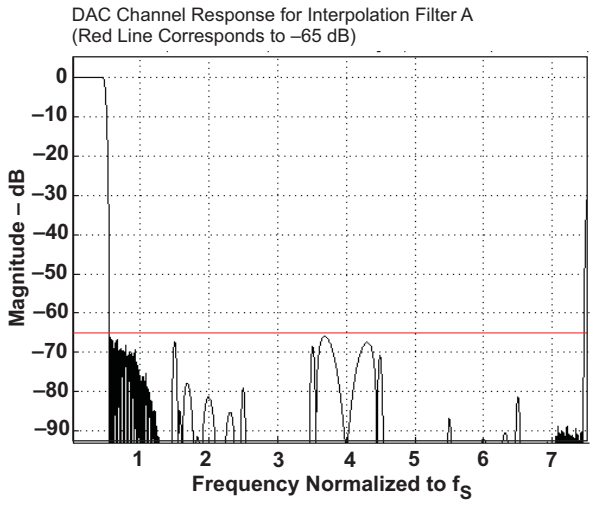

Figure 5-30. Frequency Response of DAC Interpolation Filter A

5.5.1.4.2 Interpolation Filter B

Filter B is specifically designed for an f_S up to 96 ksps. Thus, the flat pass-band region easily covers the required audio band of 0 kHz–20 kHz.

Table 5-29. Specification for DAC Interpolation Filter B

Parameter	Condition	Value (Typical)	Unit
Filter-gain pass band	0 … 0.45 f_S	±0.015	dB
Filter-gain stop band	0.55 f_S … 3.45 f_S	–58	dB
Filter group delay		18/f_S	s

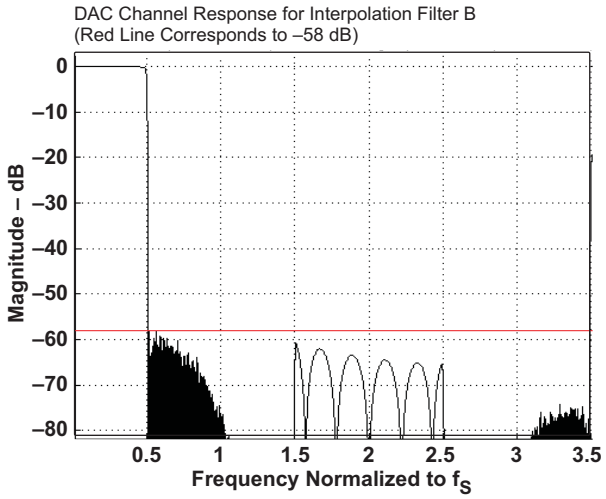

Figure 5-31. Frequency Response of Channel Interpolation Filter B

5.5.1.4.3 Interpolation Filter C

Filter C is specifically designed for the 192-ksps mode. The pass band extends up to 0.4 × f_S (corresponds to 80 kHz), more than sufficient for audio applications.

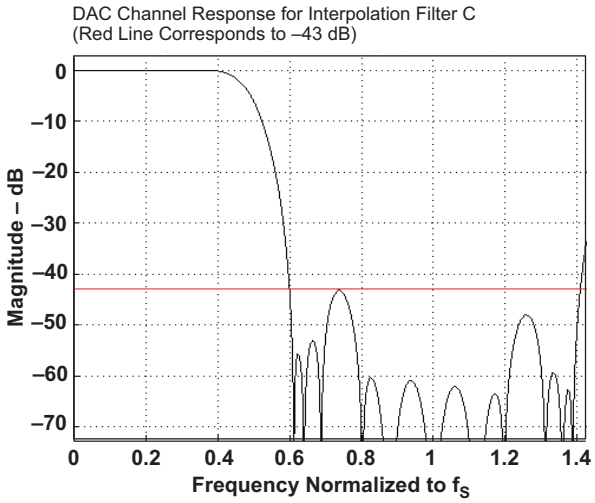

Figure 5-32. Frequency Response of DAC Interpolation Filter C

Table 5-30. Specification for DAC Interpolation Filter C

Parameter	Condition	Value (Typical)	Unit
Filter-gain pass band	0 … 0.35 f_S	±0.03	dB
Filter-gain stop band	0.6 f_S … 1.4 f_S	–43	dB
Filter group delay		13/f_S	s

5.5.2 DAC Digital-Volume Control

The DAC has a digital volume-control block which implements programmable gain. Each channel has an independent volume control that can be varied from 24 dB to –63.5 dB in 0.5-dB steps. The left-channel DAC volume can be controlled by writing to page 0 / register 65, bits D7–D0. The right-channel DAC volume can be controlled by writing to page 0 / register 66, bits D7–D0. DAC muting and setting up a master gain control to control both channels is done by writing to page 0 / register 64, bits D3–D0. The gain is implemented with a soft-stepping algorithm, which only changes the actual volume by 0.125 dB per input sample, either up or down, until the desired volume is reached. The rate of soft-stepping can be slowed to one step per two input samples by writing to page 0 / register 63, bits D1–D0. Note that the default source for volume-control level settings is control by register writes (page 0 / register 65 and page 0 / register 66 to control volume). Use of the VOL/MICDET pin to control the DAC volume is ignored until the volume control source selected has been changed to pin control (page 0 / register 116, bit D7 = 1). This functionality is shown in Figure 1-1.

During soft-stepping, the host does not receive a signal when the DAC has been completely muted. This may be important if the host must mute the DAC before making a significant change, such as changing sample rates. In order to help with this situation, the device provides a flag back to the host via a read-only register, page 0 / register 38, bit D4 for the left channel and bit D0 for the right channel. This information alerts the host when the part has completed the soft-stepping and the actual volume has reached the desired volume level. The soft-stepping feature can be disabled by writing to page 0 / register 63, bits D1–D0.

Copyright © 2009, Texas Instruments Incorporated

If soft-stepping is enabled, the CODEC_CLKIN signal should be kept active until the DAC power-up flag is cleared. When this flag is cleared, the internal DAC soft-stepping process is complete, and CODEC_CLKIN can be stopped if desired. (The analog volume control can be ramped down using an internal oscillator.)

5.5.3 Volume-Control Pin

The range of voltages used by the 7-bit SAR ADC is shown in the *Electrical Characteristics* table.

The volume-control pin is not enabled by default but it can be enabled by writing 1 to page 0 / register 116, bit D7. The default DAC volume control uses software control of the volume, which occurs if page 0 / register 116, bit D7 = 0. Soft-stepping the volume level is set up by writing to page 0 / register 63, bits D1–D0.

When the volume-pin function is used, a 7-bit Vol ADC reads the voltage on the VOL/MICDET pin and updates the digital volume control. (It overwrites the current value of the volume control.) The new volume setting which has been applied due to a change of voltage on the volume control pin can be read on page 0 / register 117, bits D6–D0. The 7-bit Vol ADC clock source can be selected on page 0 / register 116, bit D6. The update rate can be programmed on page 0 / register 116, bits D2–D0 for this 7-bit SAR ADC.

The VOL/MICDET pin gain mapping is shown in Table 5-31.

Table 5-31. VOL/MICDET Pin Gain Mapping

VOL/MICDET PIN SAR OUTPUT	DIGITAL GAIN APPLIED
0	18 dB
1	17.5 dB
2	17 dB
:	:
35	0.5 dB
36	0.0 dB
37	–0.5 dB
:	:
89	–26.5 dB
90	–27 dB
91	–28 dB
:	:
125	–62 dB
126	–63 dB
127	Mute

Copyright © 2009, Texas Instruments Incorporated

The VOL/MICDET pin connection and functionality are shown in Figure 5-33.

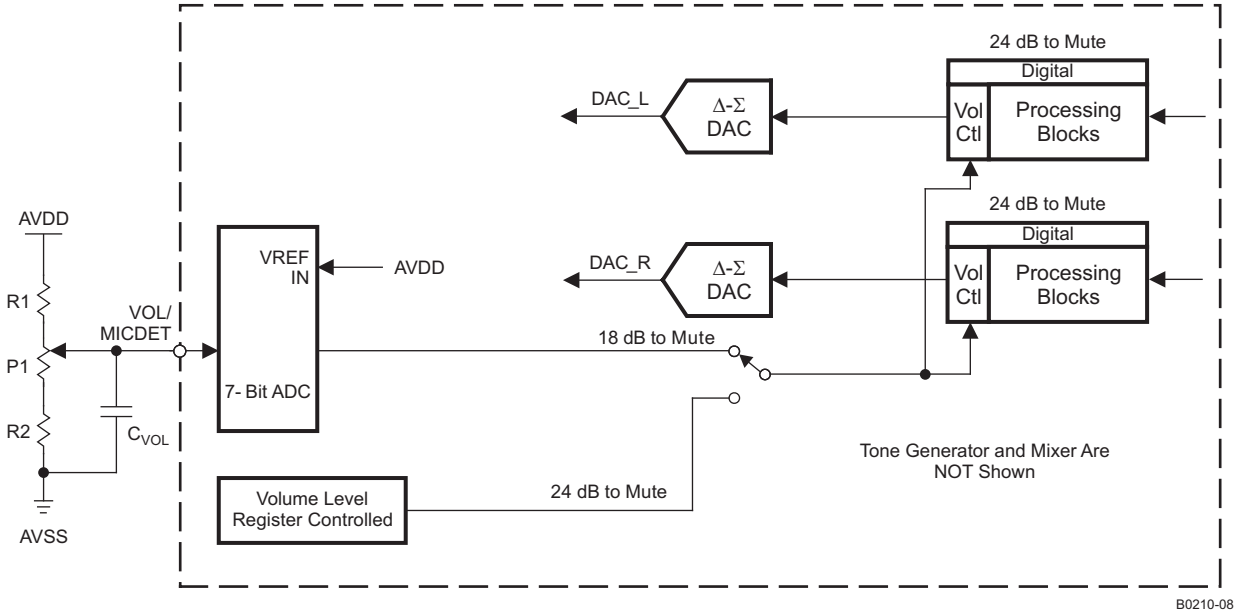

Figure 5-33. Digital Volume Controls for Beep Generator and DAC Play Data

As shown in Table 5-31, the VOL/MICDET pin has a range of volume control from 18 dB down to –63 dB, and mute. However, if less maximum gain is required, then a smaller range of voltage should be applied to the VOL/MICDET pin. This can be done by increasing the value of R2 relative to the value of (P1 + R1), so that more voltage is available at the bottom of P1. The circuit should also be designed such that for the values of R1, R2, and P1 chosen, the maximum voltage (top of the potentiometer) does not exceed AVDD/2 (see Figure 5-33). The recommended values for R1, R2, and P1 for several maximum gains are shown in Table 5-32.

Table 5-32. VOL/MICDET Pin Gain Scaling

R1 (kΩ)	P1 (kΩ)	R2 (kΩ)	ADC VOLTAGE for AVDD = 3.3 V (V)	DIGITAL GAIN RANGE (dB)
25	25	0	0 V to 1.65 V	18 dB to –63 dB
33	25	7.68	0.386 V to 1.642 V	3 dB to –63 dB
34.8	25	9.76	0.463 V to 1.649 V	0 dB to –63 dB

5.5.4 Dynamic Range Compression

Typical music signals are characterized by crest factors, the ratio of peak signal power to average signal power, of 12 dB or more. To avoid audible distortions due to clipping of peak signals, the gain of the DAC channel must be adjusted so as not to cause hard clipping of peak signals. As a result, during nominal periods, the applied gain is low, causing the perception that the signal is not loud enough. To overcome this problem, dynamic range compression (DRC) in the TLV320AIC3110 continuously monitors the output of the DAC digital volume control to detect its power level relative to 0 dBFS. When the power level is low, DRC increases the input signal gain to make it sound louder. At the same time, if a peaking signal is detected, it autonomously reduces the applied gain to avoid hard clipping. This results in sounds more pleasing to the ear as well as sounding louder during nominal periods.

The DRC functionality in the TLV320AIC3110 is implemented by a variety of processing blocks in the DAC channel as described in Section 5.5.1.2.

DRC can be disabled by writing to page 0 / register 68, bits D6–D5.

Copyright © 2009, Texas Instruments Incorporated

DRC typically works on the filtered version of the input signal. The input signals have no audio information at dc and extremely low frequencies; however, they can significantly influence the energy estimation function in the dynamic range compressor (*the DRC*). Also, most of the information about signal energy is concentrated in the low-frequency region of the input signal.

To estimate the energy of the input signal, the signal is first fed to *the DRC* high-pass filter and then to *the DRC* low-pass filter. These filters are implemented as first-order IIR filters given by

$$H_{HPF}(z) = \frac{N_0 + N_1 z^{-1}}{2^{15} - D_1 z^{-1}} \quad (6)$$

$$H_{LPF}(z) = \frac{N_0 + N_1 z^{-1}}{2^{15} - D_1 z^{-1}} \quad (7)$$

The coefficients for these filters are 16 bits wide in 2s-complement format and are user-programmable through register write as given in Table 5-33.

Table 5-33. *The DRC* HPF and LPF Coefficients

Coefficient	Location
HPF N0	C71 page 9 / register 14 and page 9 / register 15
HPF N1	C72 page 9 / register 16 and page 9 / register 17
HPF D1	C73 page 9 / register 18 and page 9 / register 19
LPF N0	C74 page 9 / register 20 and page 9 / register 21
LPF N1	C75 page 9 / register 22 and page 9 / register 23
LPF D1	C76 page 9 / register 24 and page 9 / register 25

The default values of these coefficients implement a high-pass filter with a cutoff at 0.00166 × DAC_f_S, and a low-pass filter with a cutoff at 0.00033 × DAC_f_S.

The output of *the DRC* high-pass filter is fed to the processing block selected for the DAC channel. The absolute value of *the DRC* LPF filter is used for energy estimation within *the DRC*.

The gain in the DAC digital volume control is controlled by page 0 / register 65 and page 0 / register 66. When *the DRC* is enabled, the applied gain is a function of the digital volume control register setting and the output of *the DRC*.

The DRC parameters are described in sections that follow.

5.5.4.1 DRC Threshold

The DRC threshold represents the level of the DAC playback signal at which the gain compression becomes active. The output of the digital volume control in the DAC is compared with the set threshold. The threshold value is programmable by writing to page 0 / register 68, bits D4–D2. The threshold value can be adjusted between –3 dBFS and –24 dBFS in steps of 3 dB. Keeping the DRC threshold value too high may not leave enough time for *the DRC* block to detect peaking signals, and can cause excessive distortion at the outputs. Keeping the DRC threshold value too low can limit the perceived loudness of the output signal.

The recommended DRC threshold value is –24 dB.

When the output signal exceeds the set DRC threshold, the interrupt flag bits at page 0 / register 44, bits D3–D2 are updated. These flag bits are *sticky* in nature, and are reset only after they are read back by the user. The non-sticky versions of the interrupt flags are also available at page 0 / register 46, bits D3–D2.

Copyright © 2009, Texas Instruments Incorporated

5.5.4.2 DRC Hysteresis

DRC hysteresis is programmable by writing to page 0 / register 68, bits D1–D0. These bits can be programmed to represent values between 0 dB and 3 dB in steps of 1 dB. It is a programmable window around the programmed DRC threshold that must be exceeded for *the* disabled *DRC* to become enabled, or *the* enabled *DRC* to become disabled. For example, if the DRC threshold is set to –12 dBFS and the DRC hysteresis is set to 3 dB, then if the gain compression in *the DRC* is inactive, the output of the DAC digital volume control must exceed –9 dBFS before gain compression due to *the DRC* is activated. Similarly, when the gain compression in *the DRC* is active, the output of the DAC digital volume control must fall below –15 dBFS for gain compression in *the DRC* to be deactivated. The DRC hysteresis feature prevents the rapid activation and de-activation of gain compression in *the DRC* in cases when the output of the DAC digital volume control rapidly fluctuates in a narrow region around the programmed DRC threshold. By programming the DRC hysteresis as 0 dB, the hysteresis action is disabled.

The recommended value of DRC hysteresis is 3 dB.

5.5.4.3 DRC Hold Time

The DRC hold time is intended to slow the start of decay for a specified period of time in response to a decrease in energy level. To minimize audible artifacts, it is recommended to set the DRC hold time to 0 through programming page 0 / register 69, bits D6–D3 = 0000.

5.5.4.4 DRC Attack Rate

When the output of the DAC digital volume control exceeds the programmed DRC threshold, the gain applied in the DAC digital volume control is progressively reduced to avoid the signal from saturating the channel. This process of reducing the applied gain is called *attack*. To avoid audible artifacts, the gain is reduced slowly with a rate equaling the attack rate, programmable via page 0 / register 70, bits D7–D4. Attack rates can be programmed from 4-dB gain change per sample period to 1.2207e–5-dB gain change per sample period.

Attack rates should be programmed such that before the output of the DAC digital volume control can clip, the input signal should be sufficiently attenuated. High attack rates can cause audible artifacts, and too-slow attack rates may not be able to prevent the input signal from clipping.

The recommended DRC attack rate value is 1.9531e–4 dB per sample period.

5.5.4.5 DRC Decay Rate

When *the DRC* detects a reduction in output signal swing beyond the programmed DRC threshold, *the DRC* enters a decay state wherein the applied gain in the digital-volume control is gradually increased to programmed values. To avoid audible artifacts, the gain is slowly increased with a rate equal to the decay rate programmed through page 0 / register 70, bits D3–D0. The decay rates can be programmed from 1.5625e–3 dB per sample period to 4.7683e–7 dB per sample period. If the decay rates are programmed too fast, then sudden gain changes can cause audible artifacts. However, if it is programmed too slow, then the output may be perceived as too low for a long time after the peak signal has passed.

The recommended value of DRC decay rate is 2.4414e–5 dB per sample period.

5.5.4.6 Example Setup for DRC

- PGA gain = 12 dB
- Threshold = –24 dB
- Hysteresis = 3 dB
- Hold time = 0 ms
- Attack rate = 1.9531e–4 dB per sample period
- Decay Rate = 2.4414e–5 dB per sample period

Copyright © 2009, Texas Instruments Incorporated

Script

```
#Go to Page 0
w 30 00 00
#DAC => 12 db gain left
w 30 41 18
#DAC => 12 db gain right
w 30 42 18
#DAC => DRC Enabled for both channels, Threshold = -24 db, Hysteresis = 3 dB
w 30 44 7F
#DRC Hold = 0 ms, Rate of Changes of Gain = 0.5 dB/Fs'
w 30 45 00
#Attack Rate = 1.9531e-4 dB/Frame , DRC Decay Rate =2.4414e-5 dB/Frame
w 30 46 B6
#Go to Page 9
w 30 00 09
#DRC HPF
w 30 0E 7F AB 80 55 7F 56
#DRC LPF W 30 14 00 11 00 11 7F DE
```

5.5.4.7 Headset Detection

The TLV320AIC3110 includes extensive capability to monitor a headphone, microphone, or headset jack, to determine if a plug has been inserted into the jack, and then determine what type of headset/headphone is wired to the plug. The device also includes the capability to detect a button press, even, for example, when starting calls on mobile phones with headsets. Figure 5-34 shows the circuit configuration to enable this feature.

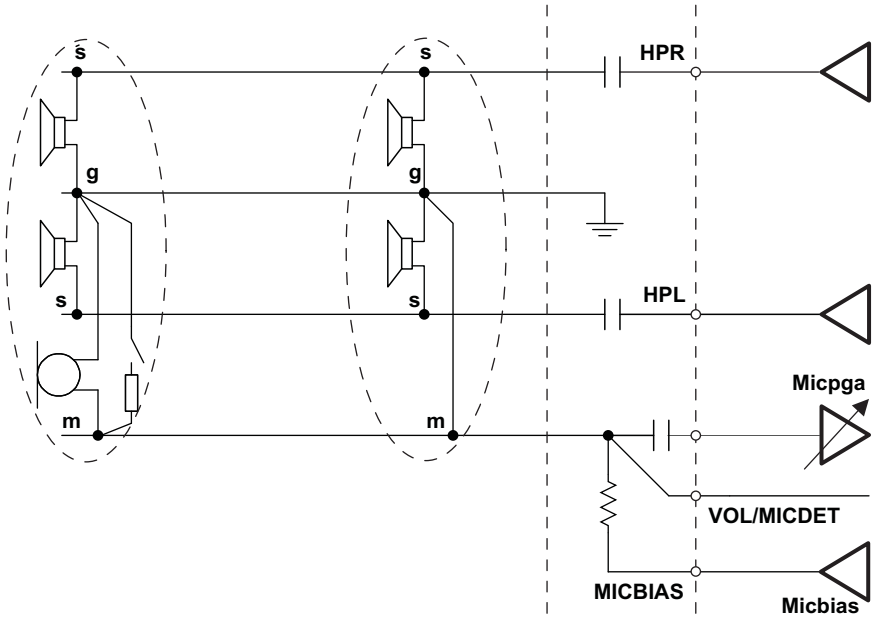

Figure 5-34. Jack Connections for Headset Detection

This feature is enabled by programming page 0 / register 67, bit D1. In order to avoid false detections due to mechanical vibrations in headset jacks or microphone buttons, a debounce function is provided for glitch rejection. For the case of headset insertion, a debounce function with a range of 32 ms to 512 ms is provided. This can be programmed via page 0 / register 67, bits D4–D2. For improved button-press detection, the debounce function has a range of 8 ms to 32 ms by programming page 0 / register 67, bits D1–D0.

The TLV320AIC3110 also provides feedback to the user when a button press or a headset insertion/removal event is detected through register-readable flags as well as an interrupt on the I/O pins. The value in page 0 / register 46, bits D5–D4 provides the instantaneous state of button press and headset insertion. Page 0 / register 44, bit D5 is a sticky (latched) flag that is set when the button-press

Copyright © 2009, Texas Instruments Incorporated

event is detected. Page 0 / register 44, bit D4 is a sticky flag which is set when the headset insertion or removal event is detected. These sticky flags are set by the event occurrence, and are reset only when read. This requires polling page 0 / register 44. To avoid polling and the associated overhead, the TLV320AIC3110 also provides an interrupt feature whereby the events can trigger the INT1 and/or INT2 interrupts. These interrupt events can be routed to one of the digital output pins. See Section 5.5.4.8 for details.

The TLV320AIC3110 not only detects a headset insertion event, but also is able to distinguish between the different headsets inserted, such as stereo headphones or cellular headphones. After the headset-detection event, the user can read page 0 / register 67, bits D6–D5 to determine the type of headset inserted.

Table 5-34. Headset-Detection Block Registers

Register	Description
Page 0 / register 67, bit D1	Headset-detection enable/disable
Page 0 / register 67, bits D4–D2	Debounce programmability for headset detection
Page 0 / register 67, bits D1–D0	Debounce programmability for button press
Page 0 / register 44, bit D5	Sticky flag for button-press event
Page 0 / register 44, bit D4	Sticky flag for headset-insertion or -removal event
Page 0/rRegister 46, bit D5	Status flag for button-press event
Page 0 / register 46, bit D4	Status flag for headset insertion and removal
Page 0 / register 67, bits D6–D5	Flags for type of headset detected

The headset detection block requires AVDD to be powered. The headset detection feature in the TLV320AIC3110 is achieved with very low power overhead, requiring less than 20 µA of additional current from the AVDD supply.

5.5.4.8 Interrupts

Some specific events in the TLV320AIC3110, which may require host processor intervention, can be used to trigger interrupts to the host processor. This avoids polling the status-flag registers continuously. The TLV320AIC3110 has two defined interrupts, INT1 and INT2, that can be configured by programming page 0 / register 48 and page 0 / register 49. A user can configure interrupts INT1 and INT2 to be triggered by one or many events, such as:

- Headset detection
- Button press
- DAC DRC signal exceeding threshold
- Noise detected by AGC
- Overcurrent condition in headphone drivers/speaker drivers
- Data overflow in ADC and DAC processing blocks and filters
- DC measurement data available

Each of these INT1 and INT2 interrupts can be routed to output pin GPIO1 or DOUT. These interrupt signals can either be configured as a single pulse or a series of pulses by programming page 0 / register 48, bit D0 and page 0 / register 49, bit D0. If the user configures the interrupts as a series of pulses, the events trigger the start of pulses that stop when the flag registers in page 0 / register 44, page 0 / register 45, and page 0 / register 50 are read by the user to determine the cause of the interrupt.

5.5.5 Key-Click Functionality With Digital Sine-Wave Generator (PRB_P25)

A special algorithm has been included in digital signal-processing block PRB_P25 for generating a digital sine-wave signal that is sent to the DAC. The digital sine-wave generator is also referred to as the beep generator in this document.

Copyright © 2009, Texas Instruments Incorporated

This functionality is intended for generating key-click sounds or beeps for user feedback. The sine-wave generator is very flexible (see Table 5-35) and is completely register programmable. Programming page 0 / register 71 through page 0 / register 79 (8 bits each) completely controls the functionality of this generator and allows for differentiating sounds.

The two registers used for programming the 16-bit sine-wave coefficient are page 0 / register 76 and page 0 / register 77. The two registers used for programming the 16-bit cosine-wave coefficient are page 0 / register 78 and page 0 / register 79. This coefficient resolution allows virtually any frequency of sine wave in the audio band to be generated, up to $f_S/2$.

The three registers used to control the length of the sine-burst waveform are page 0 / register 73, page 0 / register 74, and page 0 / register 75. The resolution (bit) in the registers of the sine-burst length is one sample time, so this allows great control on the overall time of the sine-burst waveform. This 24-bit length timer supports 16,777,215 sample times. (For example, if f_S is set at 48 kHz, and the register value equals 96,000d (01 7700h), then the sine burst lasts exactly 2 seconds.) The default settings for the tone generator, based on using a sample rate of 48 kHz, are 1-kHz (approximately) sine wave, with a sine-burst length of five cycles (5 ms).

Table 5-35. Beep Generator Register Locations (Page 00h)

	LEFT BEEP CONTROL	RIGHT BEEP CONTROL	BEEP LENGTH			SINE		COSINE	
			MSB	MID	LSB	MSB	LSB	MSB	LSB
REGISTER	71	72	73	74	75	76	77	78	79

Table 5-36. Example Beep-Generator Settings for a 1000-Hz Tone(1)

BEEP FREQUENCY	BEEP LENGTH			SINE		COSINE		SAMPLE RATE
Hz	MSB (hex)	MID (hex)	LSB (hex)	MSB (hex)	LSB (hex)	MSB (hex)	LSB (hex)	Hz
1000	0	0	EE	10	D8	7E	E3	48,000

(1) These are the default settings.

Two registers are used to control the left sine-wave volume and the right sine-wave volume independently. The 6-bit digital volume control used allows level control of 2 dB to –61 dB in 1-dB steps. The left-channel volume is controlled by writing to page 0 / register 71, bits D5–D0. The right-channel volume is controlled by writing to page 0, register 72, bits D5–D0. A master volume control that controls the left and right channels of the beep generator can be set up by writing to page 0 / register 72, bits D7–D6. The default volume control setting is 2 dB, which provides the maximum tone-generator output level.

For generating other tones, the three tone-generator coefficients can be found by running the following script using MATLAB™ :

```
Sine = dec2hex(round(sin(2*pi*Fin/Fs)*2^15))
Cosine = dec2hex(round(cos(2*pi*Fin/Fs)*2^15))
Beep Length = dec2hex(floor(Fs*Cycle/Fin))
```

where,

f_{in} = Beep frequency desired.
f_S = Sample rate.
Cycle = Number of beep (sine wave) cycles that are needed.
dec2hex = Decimal to hexadecimal conversion function.

NOTES:

1. f_{in} should be less than $f_S/4$.
2. For the sine and cosine values, if the number of bits is less than the full 16-bit value, then the unused MSBs must be written as 0s.
3. For the beep-length values, if number of bits is less than the full 24-bit value, then the unused MSBs must be written as 0s.

Copyright © 2009, Texas Instruments Incorporated

Following the beep volume control is a digital mixer that mixes in a playback data stream whose level has already been set by the DAC volume control. Therefore, once the key-click volume level is set, the key-click volume is not affected by the DAC volume control, which is the main control available to the end user. This functionality is shown in Figure 1-1.

Following the DAC, the signal can be further scaled by the analog output volume control and power amplifier level control.

The beep generator is used for the key-click function. A single beep is generated by writing to page 0 / register 71, bit D7. After the programmed beep length has finished, register 71, bit D7 is reset back to zero.

5.5.6 Programming DAC Digital Filter Coefficients

The digital filter coefficients must be programmed through the I^2C interface. All digital filtering for the DAC signal path must be loaded into the RAM before the DAC is powered on. (Note that default ALLPASS filter coefficients for programmable biquads are located in boot ROM. The boot ROM automatically loads the default values into the RAM following a hardware reset (toggling the $\overline{\text{RESET}}$ pin) or after a software reset. After resetting the device, loading boot ROM coefficients into the digital filters requires 100 µs of programming time. During this time, reading or writing to page 8 through page 15 for updating DAC filter coefficient values is not permitted. (The DAC should not be powered up until after all of the DAC configurations have been done by the system microprocessor.)

5.5.7 Updating DAC Digital Filter Coefficients During PLAY

When it is required to update the DAC digital filter coefficients or beep generator during play, care must be taken to avoid click and pop noise or even a possible oscillation noise. These artifacts can occur if the DAC coefficients are updated without following the proper update sequence. The correct sequence is shown in Figure 5-35. The values for times listed in Figure 5-35 are conservative and should be used for software purposes.

There is also an adaptive mode, in which DAC coefficients can be updated while the DAC is on. For details, see Section 5.5.1.3.

Copyright © 2009, Texas Instruments Incorporated

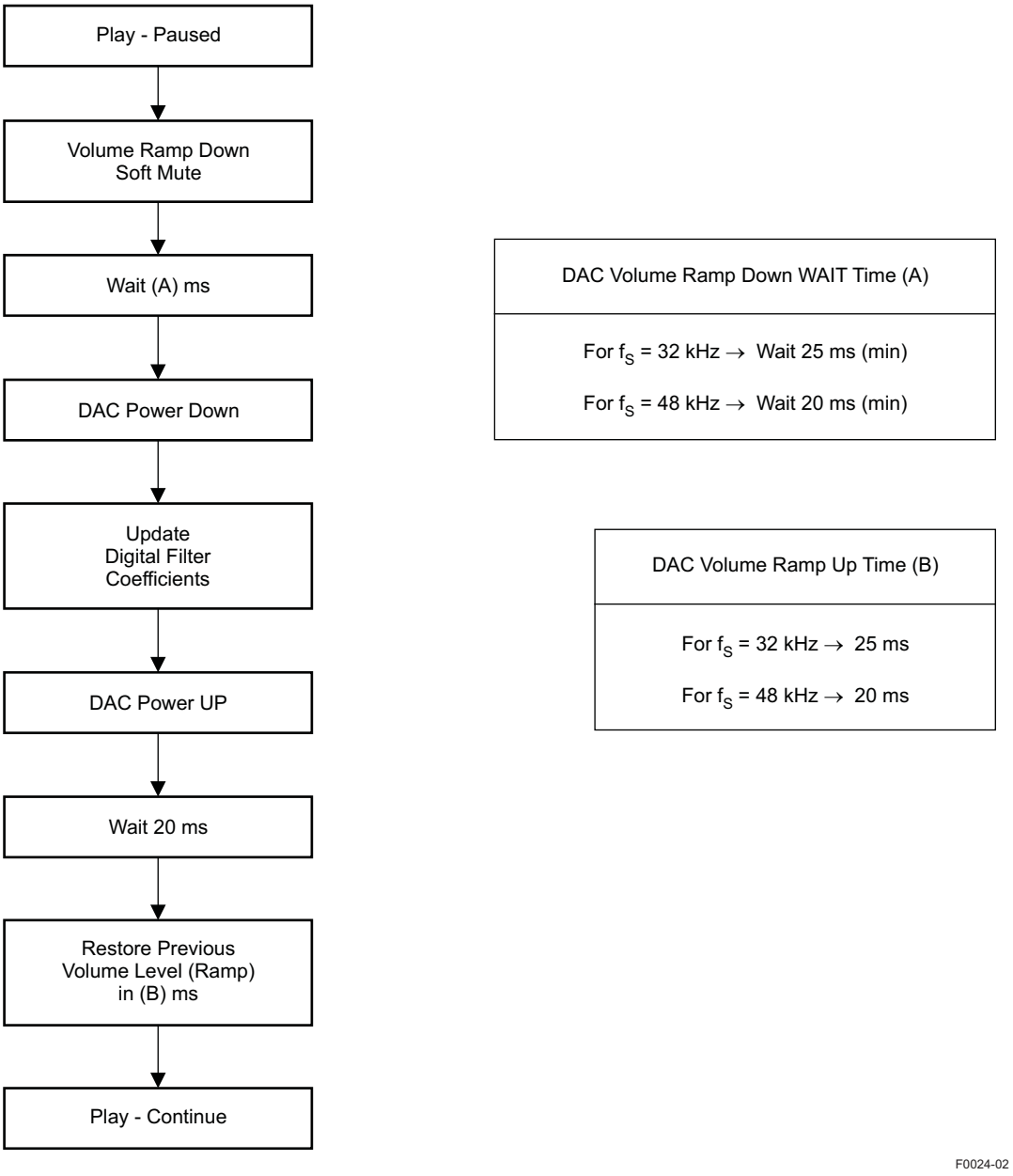

Figure 5-35. Example Flow For Updating DAC Digital Filter Coefficients During Play

5.5.8 Digital Mixing and Routing

The TLV320AIC3110 has four digital mixing blocks. Each mixer can provide either mixing or multiplexing of the digital audio data. This arrangement of digital mixers allows independent volume control for both the playback data and the key-click sound. The first set of mixers can be used to make monaural signals from left and right audio data, or they can even be used to swap channels to the DAC. This function is accomplished by selecting left audio data for the right DAC input, and right data for the left DAC input. The second set of mixers provides mixing of the audio data stream and the key-click sound. The digital routing can be configured by writing to page 0 / register 63, bits D5–D4 for the left channel and bits D3–D2 for the right channel.

Because the key-click function uses the digital signal processing block, the CODEC_CLKIN, DAC, analog volume control, and output driver must be powered on for the key-click sound to occur.

Copyright © 2009, Texas Instruments Incorporated

5.5.9 Analog Audio Routing

The TLV320AIC3110 has the capability to route the DAC output to either the headphone or the speaker output. If desirable, both output drivers can be operated at the same time while playing at different volume levels. The TLV320AIC3110 provides various digital routing capabilities, allowing digital mixing or even channel swapping in the digital domain. All analog outputs other than the selected ones can be powered down for optimal power consumption.

5.5.9.1 Analog Output Volume Control

The output volume control can be used to fine-tune the level of the mixer amplifier signal supplied to the headphone driver or the speaker driver. This architecture supports separate and concurrent volume levels for each of the four output drivers. This volume control can also be used as part of the output pop-noise reduction scheme. This feature is available even if the ADC and DAC are powered down.

5.5.9.2 Headphone Analog-Output Volume Control

For the headphone outputs, the analog volume control has a range from 0 dB to –78 dB in 0.5-dB steps for most of the useful range plus mute, which is shown in Table 5-37 and Table 5-38. This volume control includes soft-stepping logic. Routing the left-channel DAC output signal to the left-channel analog volume control is done by writing to page 1 / register 35, bit D6. Routing the right-channel DAC output signal to the right-channel analog volume control is done by writing to page 1 / register 35, bit D2.

Changing the left-channel analog volume for the headphone is controlled by writing to page 1 / register 36, bits D6–D0. Changing the right-channel analog volume for the headphone is controlled by writing to page 1 / register 37, bits D6–D0. Routing the signal from the output of the left-channel analog volume control to the input of the left-channel headphone power amplifier is done by writing to page 1 / register 36, bit D7. Routing the signal from the output of the right-channel analog volume control to the input of the right-channel headphone power amplifier is done by writing to page 1 / register 37, bit D7.

The analog volume-control soft-stepping time is based on the setting in page 0 / register 63, bits D1–D0.

Copyright © 2009, Texas Instruments Incorporated

Table 5-37. Analog Volume Control for Headphone and Speaker Outputs (for D7 = 0)

Register Value	Analog Attenuation (dB)	Register Value	Analog Attenuation (dB)	Register Value	Analog Attenuation (dB)	Register Value	Analog Attenuation (dB)
0	0.0	30	–15.1	60	–30.1	90	–45.4
1	–0.5	31	–15.6	61	–30.7	91	–46.0
2	–1.0	32	–16.0	62	–31.1	92	–46.4
3	–1.5	33	–16.5	63	–31.7	93	–46.9
4	–2.0	34	–17.1	64	–32.2	94	–47.6
5	–2.5	35	–17.6	65	–32.7	95	–48.2
6	–3.0	36	–18.1	66	–33.2	96	–48.4
7	–3.5	37	–18.6	67	–33.7	97	–49.0
8	–4.0	38	–19.1	68	–34.2	98	–49.6
9	–4.5	39	–19.6	69	–34.7	99	–50.3
10	–5.0	40	–20.1	70	–35.2	100	–50.7
11	–5.5	41	–20.6	71	–35.7	101	–51.4
12	–6.0	42	–21.1	72	–36.2	102	–51.8
13	–6.5	43	–21.6	73	–36.8	103	–52.2
14	–7.0	44	–22.1	74	–37.2	104	–52.7
15	–7.5	45	–22.6	75	–37.8	105	–53.2
16	–8.0	46	–23.1	76	–38.3	106	–54.2
17	–8.5	47	–23.6	77	–38.8	107	–54.7
18	–9.0	48	–24.1	78	–39.3	108	–56.0
19	–9.5	49	–24.6	79	–39.8	109	–57.4
20	–10.0	50	–25.1	80	–40.3	110	–59.2
21	–10.5	51	–25.6	81	–40.8	111	–61.4
22	–11.0	52	–26.1	82	–41.4	112	–64.3
23	–11.5	53	–26.6	83	–41.9	113	–66.2
24	–12.0	54	–27.1	84	–42.3	114	–68.7
25	–12.5	55	–27.6	85	–42.9	115	–72.2
26	–13.0	56	–28.1	86	–43.3	116	–78.3
27	–13.5	57	–28.6	87	–43.9	117–127	PGA is muted.
28	–14.1	58	–29.1	88	–44.5		
29	–14.6	59	–29.6	89	–45.0		

Copyright © 2009, Texas Instruments Incorporated

Table 5-38. Analog Volume Control for Headphone and Speaker Outputs (for D7 = 1)

Register Value	Analog Attenuation (dB)	Register Value	Analog Attenuation (dB)	Register Value	Analog Attenuation (dB)	Register Value	Analog Attenuation (dB)
0	0.0	30	–15.0	60	–30.1	90	–45.2
1	–0.5	31	–15.5	61	–30.6	91	–45.8
2	–1.0	32	–16.0	62	–31.1	92	–46.2
3	–1.5	33	–16.5	63	–31.6	93	–46.7
4	–2.0	34	–17.0	64	–32.1	94	–47.4
5	–2.5	35	–17.5	65	–32.6	95	–47.9
6	–3.0	36	–18.1	66	–33.1	96	–48.2
7	–3.5	37	–18.6	67	–33.6	97	–48.7
8	–4.0	38	–19.1	68	–34.1	98	–49.3
9	–4.5	39	–19.6	69	–34.6	99	–50.0
10	–5.0	40	–20.1	70	–35.2	100	–50.3
11	–5.5	41	–20.6	71	–35.7	101	–51.0
12	–6.0	42	–21.1	72	–36.2	102	–51.4
13	–6.5	43	–21.6	73	–36.7	103	–51.8
14	–7.0	44	–22.1	74	–37.2	104	–52.2
15	–7.5	45	–22.6	75	–37.7	105	–52.7
16	–8.0	46	–23.1	76	–38.2	106	–53.7
17	–8.5	47	–23.6	77	–38.7	107	–54.2
18	–9.0	48	–24.1	78	–39.2	108	–55.3
19	–9.5	49	–24.6	79	–39.7	109	–56.7
20	–10.0	50	–25.1	80	–40.2	110	–58.3
21	–10.5	51	–25.6	81	–40.7	111	–60.2
22	–11.0	52	–26.1	82	–41.2	112	–62.7
23	–11.5	53	–26.6	83	–41.7	113	–64.3
24	–12.0	54	–27.1	84	–42.1	114	–66.2
25	–12.5	55	–27.6	85	–42.7	115	–68.7
26	–13.0	56	–28.1	86	–43.2	116	–72.2
27	–13.5	57	–28.6	87	–43.8	117–127	–78.3
28	–14.0	58	–29.1	88	–44.3		
29	–14.5	59	–29.6	89	–44.8		

5.5.9.3 Class-D Speaker Analog Output Volume Control

For the speaker outputs, the analog volume control has a range from 0 dB to –78 dB in 0.5-dB steps for most of the useful range plus mute, as seen in Table 5-37 and Table 5-38. The implementation includes soft-stepping logic.

Routing the left-channel DAC output signal to the left-channel analog volume control is done by writing to page 1 / register 35, bit D6. Routing the right-channel DAC output signal to the right-channel analog volume control is done by writing to page 1 / register 35, bit D2. Changing the left-channel analog volume for the speaker is controlled by writing to page 1 / register 38, bits D6–D0. Changing the right-channel analog volume for the speaker is controlled by writing to page 1 / register 39, bits D6–D0.

Routing the signal from the output of the left-channel analog volume control to the input of the left-channel speaker amplifier is done by writing to page 1 / register 38, bit D7. Routing the signal from the output of the right-channel analog volume control to the input of the right-channel speaker amplifier is done by writing to page 1 / register 39, bit D7.

The analog volume-control soft-stepping time is based on the setting in page 0 / register 63, bits D1–D0.

Copyright © 2009, Texas Instruments Incorporated

5.5.10 Analog Outputs

Various analog routings are supported for playback. All the options can be conveniently viewed on the functional block diagram, Figure 1-1.

5.5.10.1 Headphone Drivers

The TLV320AIC3110 features a stereo headphone driver (HPL and HPR) that can deliver up to 30 mW per channel, at 3.3 V supply voltage, into a 16-Ω load. The headphones are used in a single-ended configuration where an ac-coupling (dc-blocking) capacitor is connected between the device output pins and the headphones. The headphone driver also supports 32-Ω and 10-kΩ loads without changing any control register settings.

The headphone drivers can be configured to optimize the power consumption in the lineout-drive mode by writing 11 to page 0 / register 44, bits D2–D1.

The output common mode of the headphone/lineout drivers can be programmed to 1.35 V, 1.5 V, 1.65 V, or 1.8 V by setting page 1 / register 31, bits D4–D3. The common-mode voltage should be set ≤ AVDD/2.

The left headphone driver can be powered on by writing to page 1 / register 31, bit D7. The right headphone driver can be powered on by writing to page 1 / register 31, bit D6. The left-output driver gain can be controlled by writing to page 1 / register 40, bits D6–D3, and it can be muted by writing to page 1 / register 40, bit D2. The right-output driver gain can be controlled by writing to page 1 / register 41, bits D6–D3, and it can be muted by writing to page 1 / register 41, bit D2.

The TLV320AIC3110 has a short-circuit protection feature for the headphone drivers, which is always enabled to provide protection. The output condition of the headphone driver during short circuit can be programmed by writing to page 1 / register 31, bit D1. If D1 = 0 when a short circuit is detected, the device limits the maximum current to the load. If D1 = 1 when a short circuit is detected, the device powers down the output driver. The default condition for headphones is the current-limiting mode. In case of a short circuit on either channel, the output is disabled and a status flag is provided as read-only bits on page 1 / register 31, bit D0. If shutdown mode is enabled, then as soon as the short circuit is detected, page 1 / register 31, bit D7 (for HPL) and/or page 1 / register 31, bit D6 (for HPR) clears automatically. Next, the device requires a reset to re-enable the output stage. Resetting can be done in two ways. First, the device master reset can be used, which requires either toggling the $\overline{\text{RESET}}$ pin or using the software reset. If master reset is used, it resets all of the registers. Second, a dedicated headphone power-stage reset can also be used to re-enable the output stage, and that keeps all of the other device settings. The headphone power-stage reset is done by setting page 1 / register 31, bit D7 for HPL and by setting page 1 / register 31, bit D6 for HPR. If the fault condition has been removed, then the device returns to normal operation. If the fault is still present, then another shutdown occurs. Repeated resetting (more than three times) is not recommended, as this could lead to overheating.

5.5.10.2 Speaker Drivers

The TLV320AIC3110 has an integrated class-D stereo speaker driver (SPLP/SPLM and SPRP/SPRM) capable of driving an 8-Ω differential load. The speaker driver can be powered directly from the battery supply (2.7 V to 5.5 V) on the SPLVDD and SPRVDD pins; however, the voltage (including spike voltage) must be limited below the absolute-maximum voltage of 6 V.

The speaker driver is capable of supplying 400 mW per channel with a 3.6-V power supply. Through the use of digital mixing, the device can connect one or both digital audio playback data channels to either speaker driver; this also allows digital channel swapping if needed.

The left class-D speaker driver can be powered on by writing to page 1 / register 32, bit D7. The right class-D speaker driver can be powered on by writing to page 1 / register 32, bit D6. The left-output driver gain can be controlled by writing to page 1 / register 42, bits D4–D3, and it can be muted by writing to page 1 / register 42, bit D2. The right-output driver gain can be controlled by writing to page 1 / register 43, bits D4–D3, and it can be muted by writing to page 1 / register 43, bit D2.

Copyright © 2009, Texas Instruments Incorporated

The TLV320AIC3110 has a short-circuit protection feature for the speaker drivers that is always enabled to provide protection. If the output is shorted, the output stage shuts down on the overcurrent condition. (Current limiting is not an available option for the higher-current speaker-driver output stage.) In case of a short circuit on either channel, the output is disabled and a status flag is provided as a read-only bit on page 1 / register 32, bit D0.

If shutdown occurs due to an overcurrent condition, then the device requires a reset to re-enable the output stage. Resetting can be done in two ways. First, the device master reset can be used, which requires either toggling the $\overline{\text{RESET}}$ pin or using the software reset. If master reset is used, it resets all of the registers. Second, a dedicated speaker power-stage reset can be used that keeps all of the other device settings. The speaker power-stage reset is done by setting page 1 / register 32, bit D7 for SPLP and SPLM and by setting page 1 / register 32, bit D6 for SPRP and SPRM. If the fault condition has been removed, then the device returns to normal operation. If the fault is still present, then another shutdown occurs. Repeated resetting (more than three times) is not recommended, as this could lead to overheating.

To minimize battery current leakage, the SPLVDD and SPRVDD voltage levels should not be less than the AVDD voltage level.

The TLV320AIC3110 has a thermal protection (OTP) feature for the speaker drivers which is always enabled to provide protection. If the device is overheated, then the output stops switching. When the device cools down, the device resumes switching. An overtemperature status flag is provided as a read-only bit on page 0 / register 3, bit D1. The OTP feature is for self-protection of the device. If die temperature can be controlled at the system/board level, then overtemperature does not occur.

5.5.11 Audio Output Stage Power Configurations

After the device has been configured (following a $\overline{\text{RESET}}$) and the circuitry has been powered up, the audio output stage can be powered up and powered down by register control.

These functions soft-start automatically. By using these register controls, it is possible to control all four output stages independently.

See Table 5-39 for register control of audio output-stage power configurations.

Table 5-39. Audio Output Stage Power Configurations

Audio Output Pins	Desired Function	Page 1 / register, Bit Value
HPL	Power down HPL driver	Page 1 / register 31, bit D7 = 0
HPL	Power-up HPL driver	Page 1 / register 31, bit D7 = 1
HPR	Power-down HPR driver	Page 1 / register 31, bit D6 = 0
HPR	Power up HPR driver	Page 1 / register 31, bit D6 = 1
SPLP / SPLM	Power down left class-D drivers	Page 1 / register 32, bit D7 = 0
SPLP / SPLM	Power up left class-D drivers	Page 1 / register 32, bit D7 = 1
SPRP / SPRM	Power down right class-D drivers	Page 1 / register 32, bit D6 = 0
SPRP / SPRM	Power up right class-D drivers	Page 1 / register 32, bit D6 = 1

5.5.12 Example Register Setup to Play Digital Data Through DAC and Headphone/Speaker Outputs

A typical EVM I^2C register control script is provided below to show how to setup the TLV320AIC3110 in Playback Mode with f_S = 44.1 kHz and MCLK = 11.2896 MHz.

```
# I2C Script to Setup TLV320AIC3110 in Playback Mode
# Key: w 30 XX YY ==> write to I2C address 0x30, to register 0xXX, data 0xYY
#               # ==> comment delimiter
#
# Select Page 0
w 30 00 00
# Software reset
```


Copyright © 2009, Texas Instruments Incorporated

```
w 30 01 01
# PLL_clkin = MCLK, codec_clkin = PLL_CLK
w 30 04 03
# PLL Power up, P = 1, R = 1
w 30 05 91
# J = 8
w 30 06 08
# D = 0000, D(13:8) = 0, D(7:0) = 0
w 30 07 00 00
# Mode is I2S, Wordlength is 16
w 30 1B 00
# NDAC is powered up and set to 4
w 30 0B 84
# MDAC is powered up and set to 4
w 30 0C 84
# DOSR = 128, DOSR(9:8) = 0, DOSR(7:0) = 128
w 30 0D 00 80
# DAC => volume control thru pin disable
w 30 74 00
# DAC => DRC disable,
w 30 44 00
# DAC => -22 db gain left
w 30 41 D4
# DAC => -22 db gain right
w 30 42 D4
# Select Page 1
w 30 00 01
# De-pop, Power on = 800 ms, Step time = 4 ms
w 30 21 4E
# HPL and HPR powered up
w 30 1F C2
# LDAC routed to HPL, RDAC routed to HPR
w 30 23 44
# HPL unmute and gain = 0db
w 30 28 06
# HPR unmute and gain = 0db
w 30 29 06
# Unmute Class-D Left
w 30 2A 1C
# Unmute Class-D Right
w 30 2B 1C
# Power-up Class-D drivers
w 30 20 C6
# Enable HPL output analog volume, set = -9 dB
w 30 24 92
# Enable HPR output analog volume, set = -9 dB
w 30 25 92
# Enable HPL output analog volume, set = -9 dB
w 30 26 92
# Enable HPR output analog volume, set = -9 dB
w 30 27 92
# Select Page 0
w 30 00 00
# Select DAC DSP Processing Block PRB_P11
w 30 3C 0B
w 30 00 08
w 30 01 04
w 30 00 00
# Powerup DAC left and right channels (soft step disable)
w 30 3F D6
# Unmute DAC left and right channels
w 30 40 00
```

5.6 CLOCK Generation and PLL

The TLV320AIC3110 supports a wide range of options for generating clocks for the ADC and DAC sections as well as interface and other control blocks as shown in Figure 5-36. The clocks for ADC and DAC require a source reference clock. This clock can be provided on variety of device pins such as MCLK, BCLK, or GPIO1 pins. The source reference clock for the codec can be chosen by programming the CODEC_CLKIN value on page 0 / register 4, bits D1–D0. The CODEC_CLKIN can then be routed

Copyright © 2009, Texas Instruments Incorporated

through highly-flexible clock dividers shown in Figure 5-36 to generate the various clocks required for ADC, DAC and digital processing sections. In the event that the desired audio clocks cannot be generated from the reference clocks on MCLK, BCLK, or GPIO1, the TLV320AIC3110 also provides the option of using the on-chip PLL, which supports a wide range of fractional multiplication values to generate the required clocks. Starting from CODEC_CLKIN, the TLV320AIC3110 provides several programmable clock dividers to help achieve a variety of sampling rates for ADC and DAC.

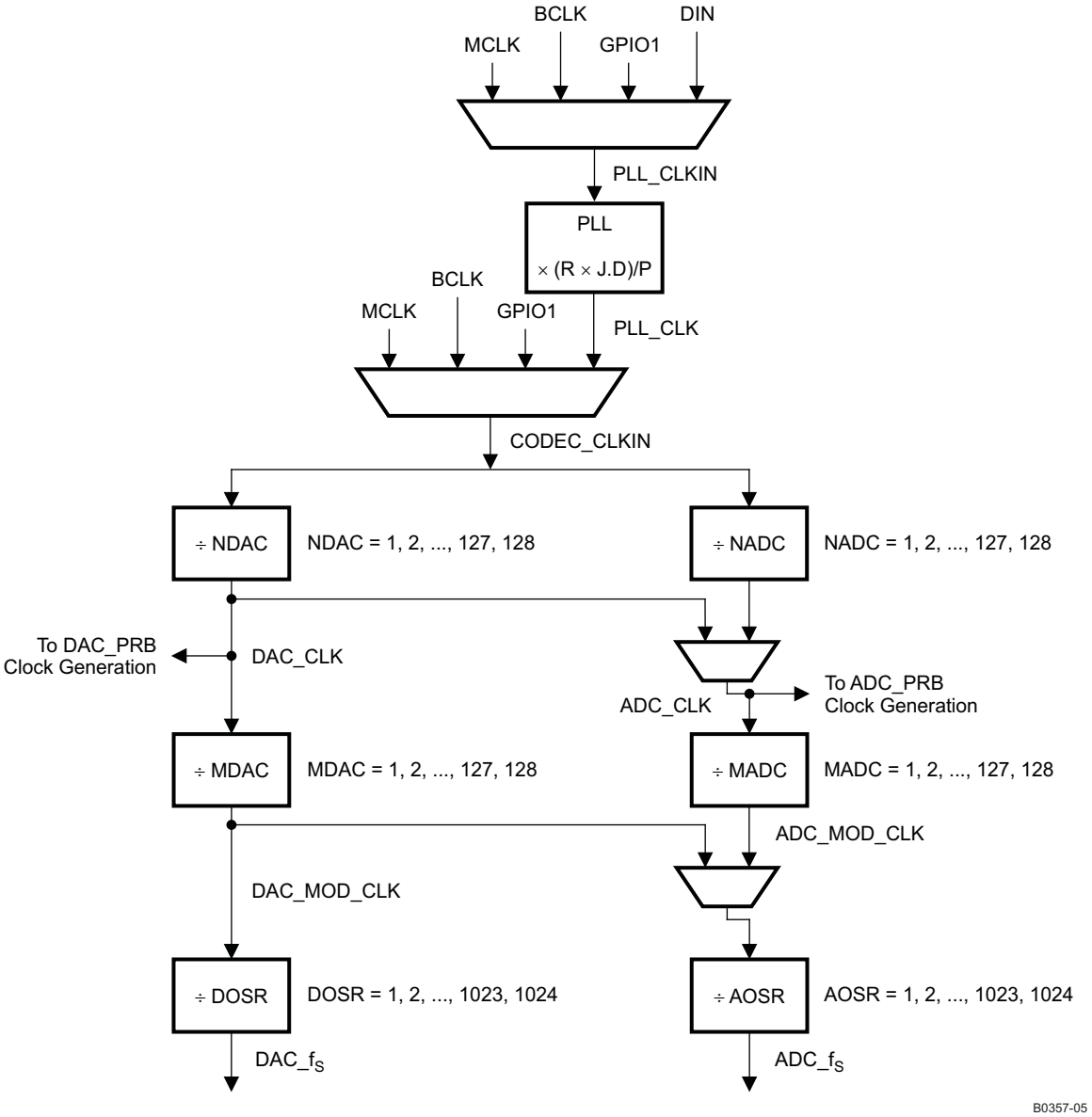

Figure 5-36. Clock Distribution Tree

$$DAC_MOD_CLK = \frac{CODEC_CLKIN}{NDAC \times MDAC} \qquad ADC_MOD_CLK = \frac{CODEC_CLKIN}{NADC \times MADC}$$

$$DAC_f_S = \frac{CODEC_CLKIN}{NDAC \times MDAC \times DOSR} \qquad ADC_f_S = \frac{CODEC_CLKIN}{NADC \times MADC \times AOSR} \quad (8)$$

Copyright © 2009, Texas Instruments Incorporated

Table 5-40. CODEC CLKIN Clock Dividers

Divider	Bits
NDAC	Page 0 / register 11, bits D6–D0
MDAC	Page 0 / register 12, bits D6–D0
DOSR	Page 0 / register 13, bits D1–D0 and page 0 / register 14, bits D7–D0
NADC	Page 0 / register 18, bits D6–D0
MADC	Page 0 / register 19, bits D6–D0
AOSR	Page 0 / register 20, bits D7–D0

The DAC modulator is clocked by DAC_MOD_CLK. For proper power-up operation of the DAC channel, these clocks must be enabled by configuring the NDAC and MDAC clock dividers (page 0 / register 11, bit D7 = 1 and page 0 / register 12, bit D7 = 1). When the DAC channel is powered down, the device internally initiates a power-down sequence for proper shutdown. During this shutdown sequence, the NDAC and MDAC dividers must not be powered down, or else a proper low-power shutdown may not take place. The user can read back the power-status flag at page 0 / register 37, bit D7 and page 0 / register 37, bit D3. When both the flags indicate power down, the MDAC divider may be powered down, followed by the NDAC divider. Note that when the ADC clock dividers are powered down, the ADC clock is derived from the DAC clocks.

The ADC modulator is clocked by ADC_MOD_CLK. For proper power-up of the ADC channel, these clocks are enabled by the NADC and MADC clock dividers (page 0 / register 18, bit D7 = 1 and page 0 / register 19, bit D7 = 1). When the ADC channel is powered down, the device internally initiates a power-down sequence for proper shutdown. During this shutdown sequence, the NADC and MADC dividers must not be powered down, or else a proper low-power shutdown may not take place. The user can read back the power-status flag from page 0 / register 36, bit D6. When this flag indicates power-down, the MADC divider may be powered down, followed by NADC divider.

When ADC_CLK (ADC processing clock) is derived from the NDAC divider output, the NDAC must be kept powered up until the power-down status flags for ADC do not indicate power down. When the input to the AOSR clock divider is derived from DAC_MOD_CLK, then MDAC must be powered up when ADC_f_S is needed (i.e., when WCLK is generated by TLV320AIC3110 or AGC is enabled) and can be powered down only after the ADC power-down flags indicate power-down status.

In general, all the root clock dividers should be powered down only after the child clock dividers have been powered down for proper operation.

The TLV320AIC3110 also has options for routing some of the internal clocks to the output pins of the device to be used as general-purpose clocks in the system. The feature is shown in Figure 5-37.

Copyright © 2009, Texas Instruments Incorporated

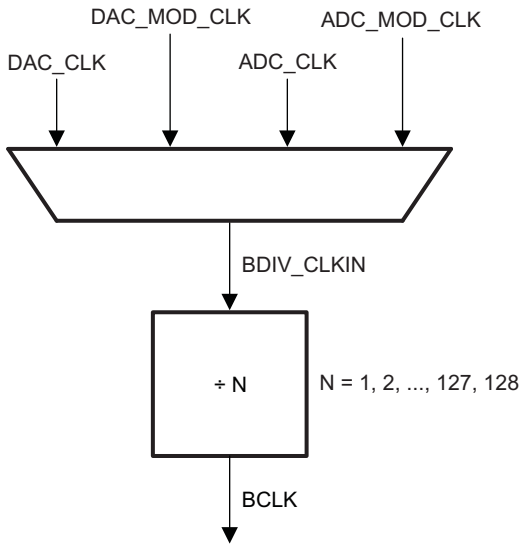

Figure 5-37. BCLK Output Options

In the mode when TLV320AIC3110 is configured to drive the BCLK pin (page 0 / register 27, bit D3 = 1), it can be driven as a divided value of BDIV_CLKIN. The division value can be programmed in page 0 / register 30, bits D6–D0 from 1 to 128. The BDIV_CLKIN can itself be configured to be one of DAC_CLK (DAC processing clock), DAC_MOD_CLK, ADC_CLK (ADC processing clock) or ADC_MOD_CLK by configuring the BDIV_CLKIN multiplexer in page 0 / register 29, bits D1–D0.

Additionally, a general-purpose clock can be driven out on either GPIO1 or DOUT. This clock can be a divided down version of CDIV_CLKIN. The value of this clock divider can be programmed from 1 to 128 by writing to page 0 / register 26, bits D6–D0. The CDIV_CLKIN can itself be programmed as one of the clocks among the list shown in Figure 5-38. This can be controlled by programming the multiplexer in page 0 / register 25, bits D2–D0.

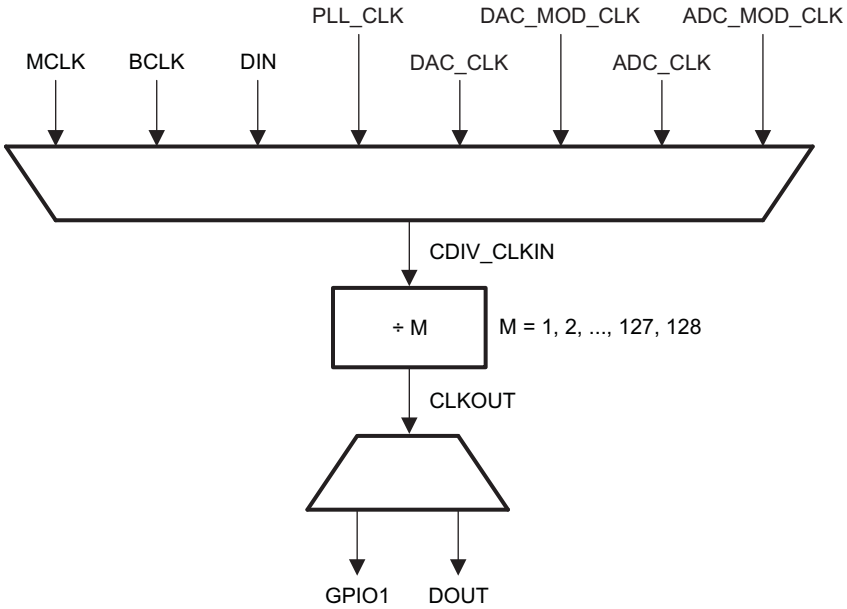

Figure 5-38. General-Purpose Clock Output Options

Copyright © 2009, Texas Instruments Incorporated

Table 5-41. Maximum TLV320AIC3110 Clock Frequencies

Clock	DVDD ≥ 1.65 V
CODEC_CLKIN	≤ 110 MHz
ADC_CLK (ADC processing clock)	≤ 49.152 MHz
ADC_PRB_CLK	≤ 24.576 MHz
ADC_MOD_CLK	6.758 MHz
ADC_f_S	0.192 MHz
DAC_CLK (DAC processing clock)	≤ 49.152 MHz
DAC_PRB_CLK	≤ 49.152MHz with DRC disabled ≤ 48 MHz with DRC enabled
DAC_MOD_CLK	6.758 MHz
DAC_f_S	0.192 MHz
BDIV_CLKIN	55 MHz
CDIV_CLKIN	100 MHz when M is odd 110 MHz when M is even

5.6.1 PLL

For lower power consumption, it is best to derive the internal audio processing clocks using the simple dividers. When the input MCLK or other source clock is not an integer multiple of the audio processing clocks then it is necessary to use the on-board PLL. The TLV320AIC3110 fractional PLL can be used to generate an internal master clock used to produce the processing clocks needed by the ADC and DAC and digital processing blocks. The programmability of this PLL allows operation from a wide variety of clocks that may be available in the system.

The PLL input supports clocks varying from 512 kHz to 20 MHz and is register programmable to enable generation of the required sampling rates with fine resolution. The PLL can be turned on by writing to page 0 / register 5, bit D7. When the PLL is enabled, the PLL output clock PLL_CLK is given by the following equation:

$$PLL_CLK = \frac{PLL_CLKIN \times R \times J.D}{P} \quad (9)$$

where

R = 1, 2, 3, ..., 16 (page 0 / register 5, default value = 1)

J = 1, 2,3, …, 63, (page 0 / register 6, default value = 4)

D = 0, 1, 2, …, 9999 (page 0 / register 7 and 8, default value = 0)

P = 1, 2, 3, …, 8 (page 0 / register 5, default value = 1)

The PLL can be turned on via page 0 / register 5, bit D7. The variable P can be programmed via page 0 / register 5, bits D6–D4. The variable R can be programmed via page 0 / register 5, bits D3–D0. The variable J can be programmed via page 0 / register 6, bits D5–D0. The variable D is 14 bits and is programmed into two registers. The MSB portion can be programmed via page 0 / register 7, bits D5–D0, and the LSB portion is programmed via page 0 / register 8, bits D7–D0. For proper update of the D-divider value, page 0 / register 7 must be programmed first followed immediately by page 0 / register 8. Unless the write to page 0 / register 8 is completed, the new value of D will not take effect.

When the PLL is enabled the following conditions must be satisfied.

- When the PLL is enabled and D = 0, the following conditions must be satisfied for PLL_CLKIN:

$$512\ kHz \le \frac{PLL_CLKIN}{P} \le 20\ MHz \quad (10)$$

80 MHz ≤ (PLL_CLKIN × J.D × R/P) ≤ 110 MHz
4 ≤ R × J ≤ 259

- When the PLL is enabled and D ≠ 0, the following conditions must be satisfied for PLL_CLKIN:

$$10\ \text{MHz} \le \frac{\text{PLL_CLKIN}}{P} \le 20\ \text{MHz} \quad (11)$$

80 MHz ≤ PLL_CLKIN × J.D × R/P ≤ 110 MHz
R = 1

The PLL can be powered up independently from the ADC and DAC blocks, and can also be used as a general-purpose PLL by routing its output to the GPIO output. After powering up the PLL, PLL_CLK is available typically after 10 ms.

The clocks for codec and various signal processing blocks, CODEC_CLKIN can be generated from MCLK input, BCLK input, GPIO input or PLL_CLK (page 0 / register 4, bits D1–D0).

If the CODEC_CLKIN is derived from the PLL, then the PLL must be powered up first and powered down last.

Table 5-42 lists several example cases of typical PLL_CLKIN rates and how to program the PLL to achieve a sample rate f_S of either 44.1 kHz or 48 kHz.

Table 5-42. PLL Example Configurations

f_S = 44.1 kHz										
PLL_CLKIN (MHz)	**PLLP**	**PLLR**	**PLLJ**	**PLLD**	**MADC**	**NADC**	**AOSR**	**MDAC**	**NDAC**	**DOSR**
2.8224	1	3	10	0	3	5	128	3	5	128
5.6448	1	3	5	0	3	5	128	3	5	128
12	1	1	7	560	3	5	128	3	5	128
13	1	1	6	3504	2	9	104	6	3	104
16	1	1	5	2920	3	5	128	3	5	128
19.2	1	1	4	4100	3	5	128	3	5	128
48	4	1	7	560	3	5	128	3	5	128
f_S = 48 kHz										
2.048	1	3	14	0	2	7	128	7	2	128
3.072	1	4	7	0	2	7	128	7	2	128
4.096	1	3	7	0	2	7	128	7	2	128
6.144	1	2	7	0	2	7	128	7	2	128
8.192	1	4	3	0	2	8	128	4	4	128
12	1	1	7	1680	2	7	128	7	2	128
16	1	1	5	3760	2	7	128	7	2	128
19.2	1	1	4	4800	2	7	128	7	2	128
48	4	1	7	1680	2	7	128	7	2	128

5.7 Digital Audio and Control Interface

5.7.1 Digital Audio Interface

Audio data is transferred between the host processor and the TLV320AIC3110 via the digital audio data serial interface, or audio bus. The audio bus on this device is very flexible, including left- or right-justified data options, support for I^2S or DSP protocols, programmable data-length options, a TDM mode for multichannel operation, very flexible master/slave configurability for each bus clock line, and the ability to communicate with multiple devices within a system directly.

The audio bus of the TLV320AIC3110 can be configured for left- or right-justified, I^2S, DSP, or TDM modes of operation, where communication with standard telephony interfaces is supported within the TDM mode. These modes are all MSB-first, with data width programmable as 16, 20, 24, or 32 bits by

Copyright © 2009, Texas Instruments Incorporated

configuring page 0 / register 27, bits D5–D4. In addition, the word clock and bit clock can be independently configured in either master or slave mode for flexible connectivity to a wide variety of processors. The word clock is used to define the beginning of a frame, and may be programmed as either a pulse or a square-wave signal. The frequency of this clock corresponds to the maximum of the selected ADC and DAC sampling frequencies.

The bit clock is used to clock in and clock out the digital audio data across the serial bus. When in master mode, this signal can be programmed to generate variable clock pulses by controlling the bit-clock divider in page 0 / register 30 (see Figure 5-36). The number of bit-clock pulses in a frame may need adjustment to accommodate various wordlengths as well as to support the case when multiple TLV320AIC3110s may share the same audio bus.

The TLV320AIC3110 also includes a feature to offset the position of start of data transfer with respect to the word clock. This offset can be controlled in terms of number of bit clocks and can be programmed in page 0 / register 28.

The TLV320AIC3110 also has the feature of inverting the polarity of the bit clock used for transferring the audio data as compared to the default clock polarity used. This feature can be used independently of the mode of audio interface chosen. This can be configured via page 0 / register 29, bit D3.

The TLV320AIC3110 further includes programmability (page 0 / register 27, D0) to place the DOUT line in the high-impedance state during all bit clocks when valid data is not being sent. By combining this capability with the ability to program at what bit clock in a frame the audio data begins, time-division multiplexing (TDM) can be accomplished, enabling the use of multiple codecs on a single audio serial data bus. When the audio serial data bus is powered down while configured in master mode, the pins associated with the interface are put into a high-impedance output state.

By default, when the word clocks and bit clocks are generated by the TLV320AIC3110, these clocks are active only when the codecs (ADC, DAC or both) are powered up within the device. This is done to save power. However, it also supports a feature whereby both the word clocks and bit-clocks can be active even when the codec in the device is powered down. This is useful when using the TDM mode with multiple codecs on the same bus, or when word clocks or bit clocks are used in the system as general-purpose clocks.

5.7.1.1 Right-Justified Mode

The audio interface of the TLV320AIC3110 can be put into right-justified mode by programming page 0 / register 27, bits D7–D6 = 10. In right-justified mode, the LSB of the left channel is valid on the rising edge of the bit clock preceding the falling edge of the word clock. Similarly, the LSB of the right channel is valid on the rising edge of the bit clock preceding the rising edge of the word clock.

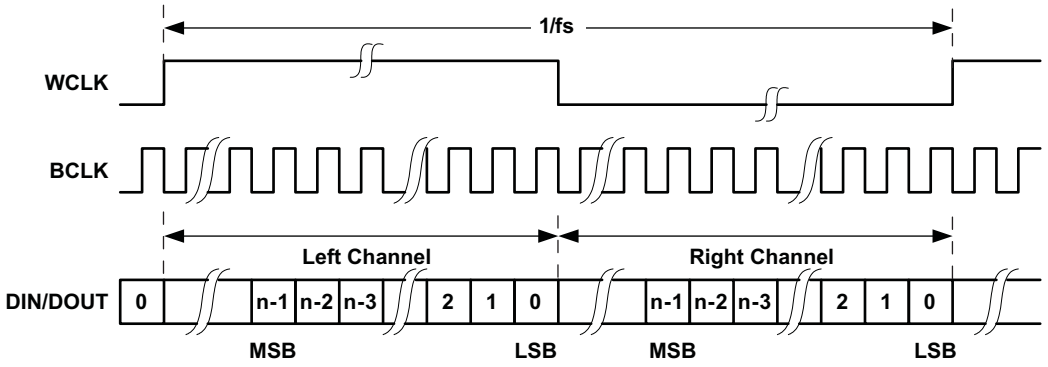

Figure 5-39. Timing Diagram for Right-Justified Mode

For right-justified mode, the number of bit clocks per frame should be greater than or equal to twice the programmed word length of the data.

5.7.1.2 Left-Justified Mode

The audio interface of the TLV320AIC3110 can be put into left-justified mode by programming page 0 / register 27, bits D7–D6 = 11. In left-justified mode, the MSB of the right channel is valid on the rising edge of the bit clock following the falling edge of the word clock. Similarly, the MSB of the left channel is valid on the rising edge of the bit clock following the rising edge of the word clock.

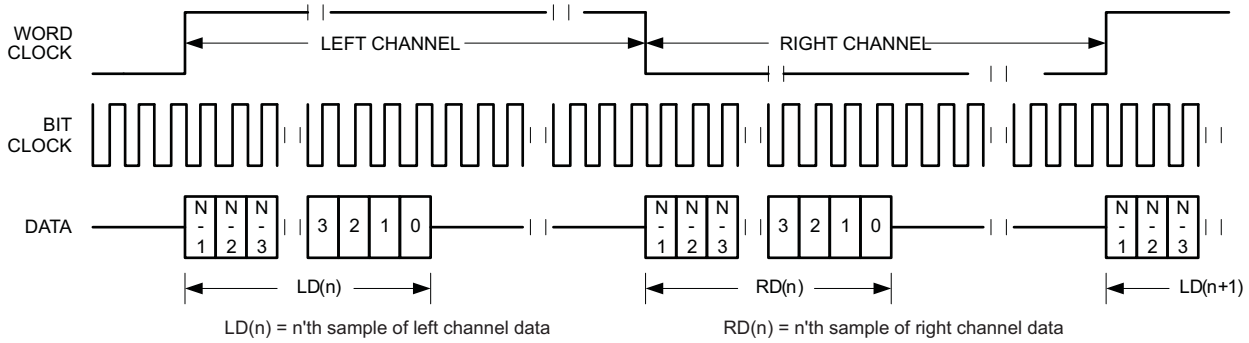

Figure 5-40. Timing Diagram for Left-Justified Mode

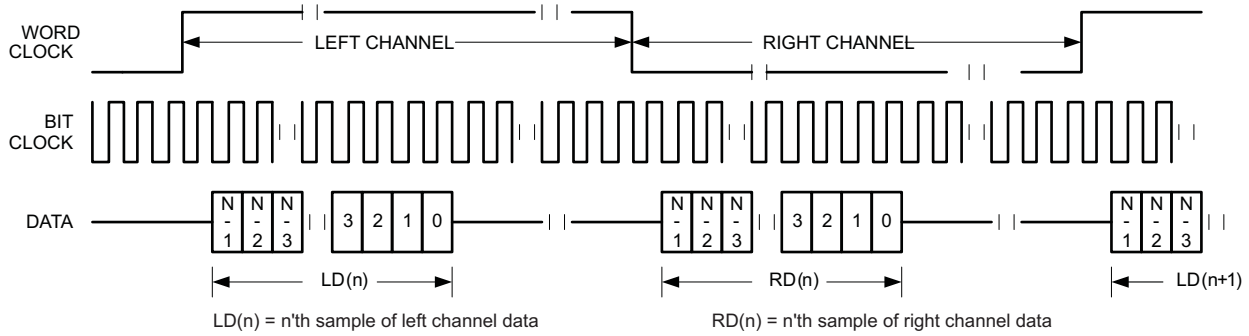

Figure 5-41. Timing Diagram for Left-Justified Mode With Offset = 1

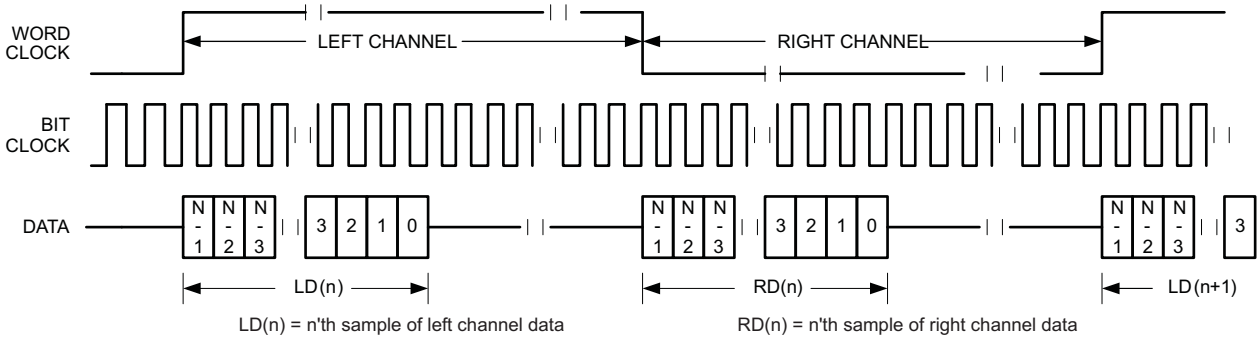

Figure 5-42. Timing Diagram for Left-Justified Mode With Offset = 0 and Inverted Bit Clock

For the left-justified mode, the number of bit clocks per frame should be greater than or equal to twice the programmed word length of the data. Also, the programmed offset value should be less than the number of bit clocks per frame by at least the programmed word length of the data.

Copyright © 2009, Texas Instruments Incorporated

5.7.1.3 I²S Mode

The audio interface of the TLV320AIC3110 can be put into I²S mode by programming page 0 / register 27, bits D7–D6 = 00. In I²S mode, the MSB of the left channel is valid on the second rising edge of the bit clock after the falling edge of the word clock. Similarly, the MSB of the right channel is valid on the second rising edge of the bit clock after the rising edge of the word clock.

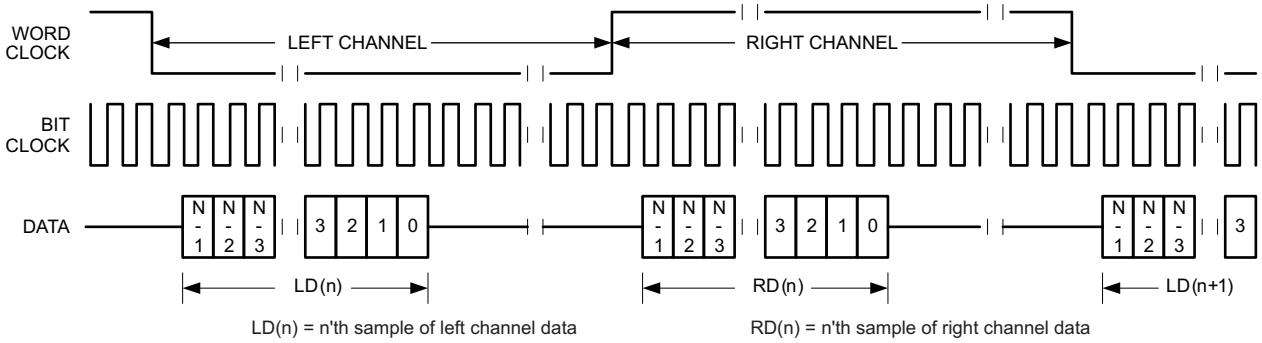

Figure 5-43. Timing Diagram for I²S Mode

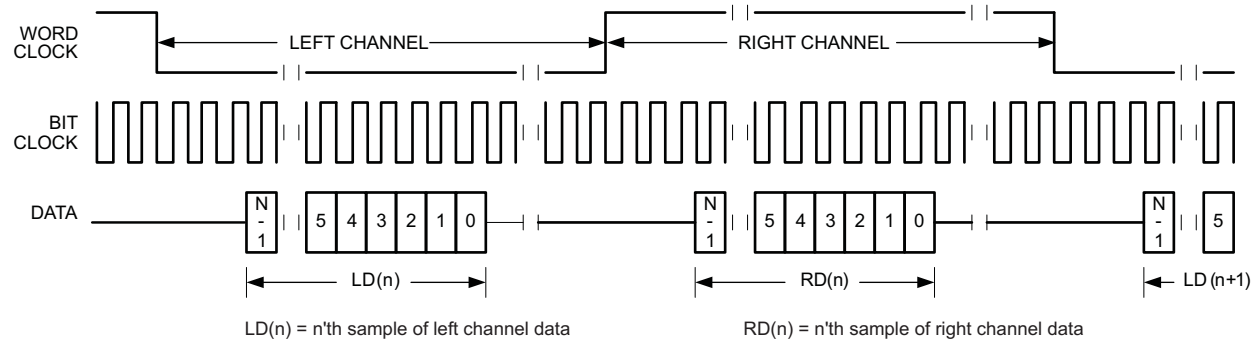

Figure 5-44. Timing Diagram for I²S Mode With Offset = 2

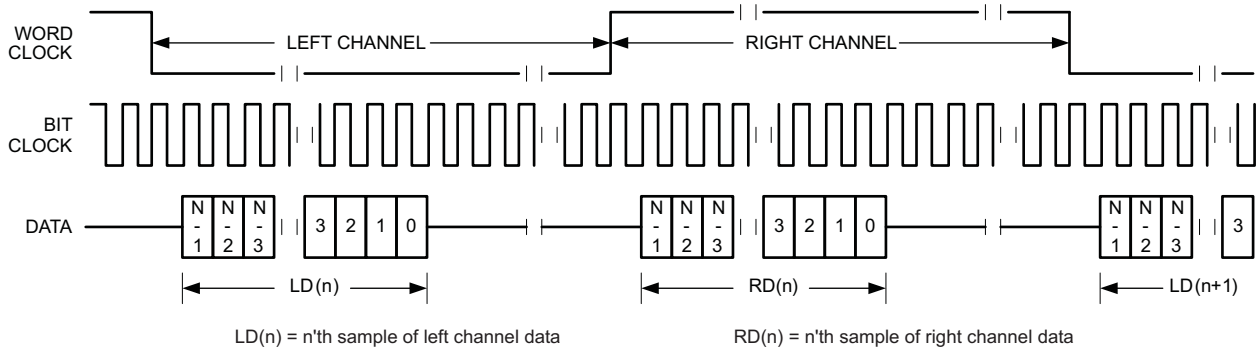

Figure 5-45. Timing Diagram for I²S Mode With Offset = 0 and Bit Clock Inverted

For I²S mode, the number of bit clocks per channel should be greater than or equal to the programmed word length of the data. Also, the programmed offset value should be less than the number of bit clocks per frame by at least the programmed word length of the data.

Figure 5-46 shows the timing diagram for I²S mode for the monoaural audio ADC.

Copyright © 2009, Texas Instruments Incorporated

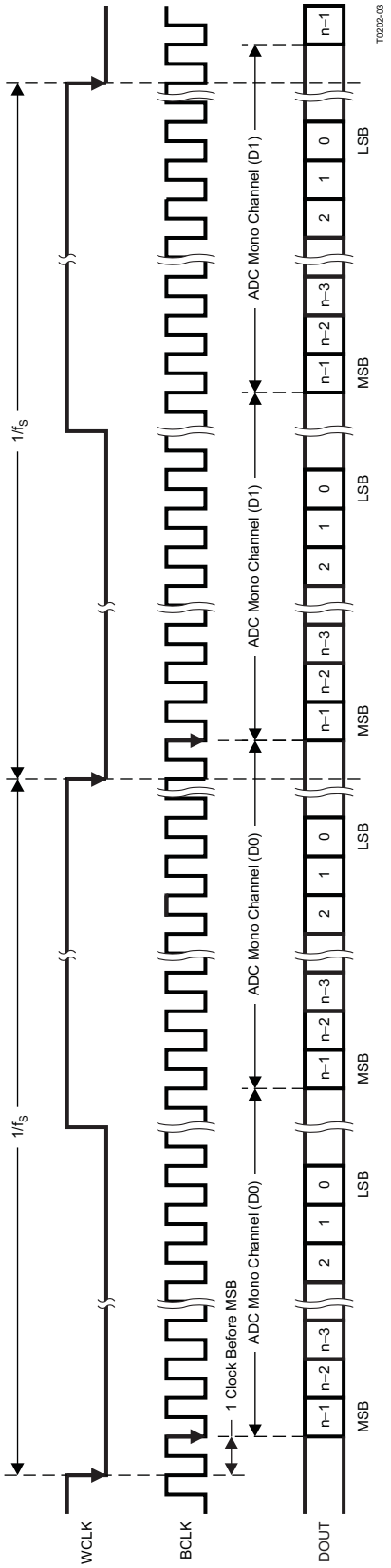

Figure 5-46. Timing Diagram for I²S Mode for Monaural Audio ADC

Copyright © 2009, Texas Instruments Incorporated

5.7.1.4 DSP Mode

The audio interface of the TLV320AIC3110 can be put into DSP mode by programming page 0 / register 27, bits D7–D6 = 01. In DSP mode, the falling edge of the word clock starts the data transfer with the left-channel data first and immediately followed by the right-channel data. Each data bit is valid on the falling edge of the bit clock.

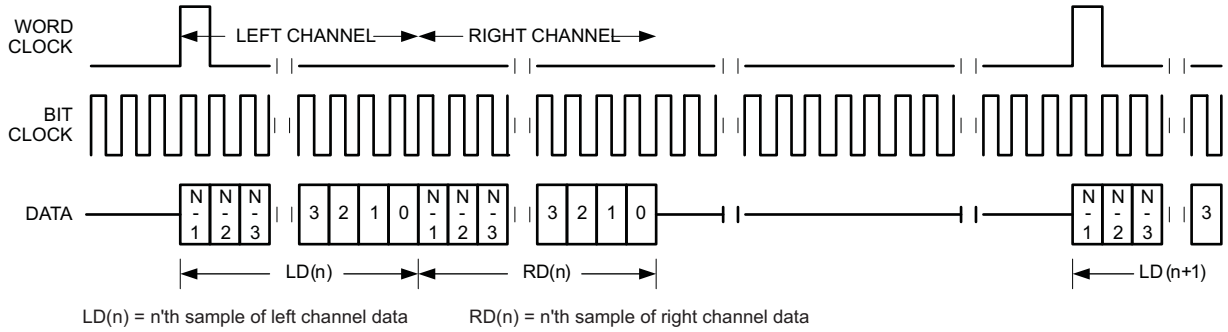

Figure 5-47. Timing Diagram for DSP Mode

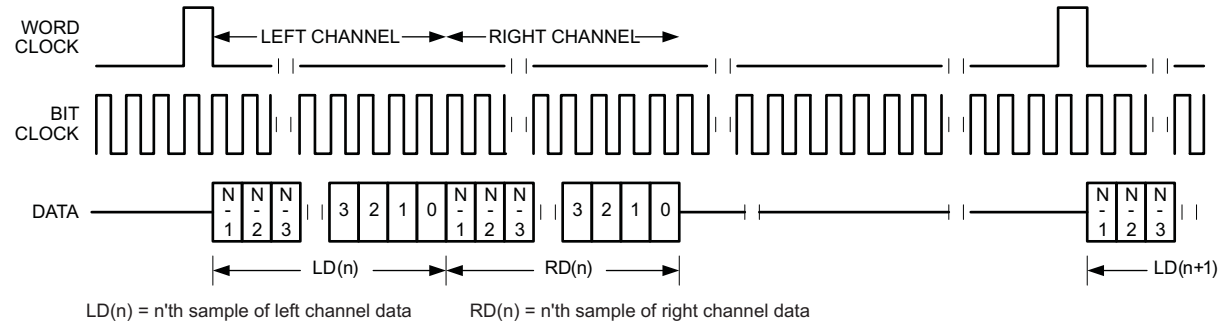

Figure 5-48. Timing Diagram for DSP Mode With Offset = 1

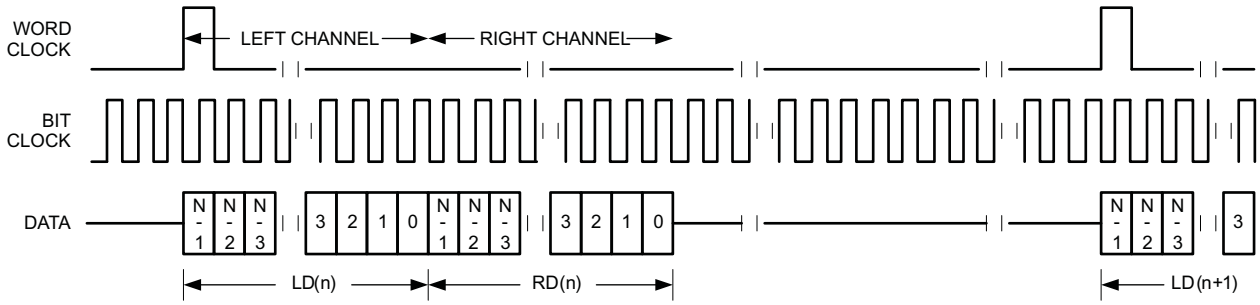

Figure 5-49. Timing Diagram for DSP Mode With Offset = 0 and Bit Clock Inverted

For DSP mode, the number of bit clocks per frame should be greater than or equal to twice the programmed word length of the data. Also the programmed offset value should be less than the number of bit clocks per frame by at least the programmed word length of the data.

5.7.2 Primary and Secondary Digital Audio Interface Selection

The audio serial interface on the TLV320AIC3110 has extensive I/O control to allow communication with two independent processors for audio data. The processors can communicate with the device one at a

time. This feature is enabled by register programming of the various pin selections. Table 5-43 shows the primary and secondary audio interface selection and registers. Table 5-44 shows the selection criteria for generating ADC_WCLK. Figure 5-50 is a high-level diagram showing the general signal flow and multiplexing for primary and secondary audio interfaces. For detailed information, see Table 5-43, Table 5-44, and the register-definition tables in Section 6.

Table 5-43. Primary and Secondary Audio Interface Selection

Desired Pin Function	Possible Pins	Page 0 Registers	Comment
Primary WCLK (OUT)	WCLK	R27/D2 = 1	Primary WCLK is output from codec
		R33/D5–D4	Select source of primary WCLK (DAC_fs, ADC_fs, or secondary WCLK)
Primary WCLK (IN)	WCLK	R27/D2 = 0	Primary WCLK is input to codec
Primary BCLK (OUT)	BCLK	R27/D3 = 1	Primary BCLK is output from codec
		R33/D7	Select source of primary WCLK (internal BCLK or secondary BCLK)
Primary BCLK (IN)	BCLK	R27/D3 = 0	Primary BCLK is input to codec
Primary DIN (IN)	DIN	R32/D0	Select DIN to internal interface (0 = primary DIN; 1 = secondary DIN)
Primary DOUT (OUT)	DOUT	R53/D3–D1 = 001	DOUT = primary DOUT for codec interface
		R33/D1	Select source for DOUT (0 = DOUT from interface block; 1 = secondary DIN)
Secondary WCLK (OUT)	GPIO1	R31/D4–D2 = 000	Secondary WCLK obtained from GPIO1 pin
		R51/D5–D2 = 1001	GPIO1 = secondary WCLK output
		R33/D3–D2	Select source of secondary WCLK (DAC_f_S, ADC_f_S, or primary WCLK)
	DOUT	R31/D4–D2 = 011	Secondary WCLK obtained from DOUT pin
		R53/D3–D1 = 111	DOUT = secondary WCLK output
		R33/D3–D2	Select source of secondary WCLK (DAC_f_S, ADC_f_S, or primary WCLK)
Secondary WCLK (IN)	GPIO1	R31/D4–D2 = 000	Secondary WCLK obtained from GPIO1 pin
		R51/D5–D2 = 0001	GPIO1 enabled as secondary input
Secondary BCLK (OUT)	GPIO1	R31/D7–D5 = 000	Secondary BCLK obtained from GPIO1 pin
		R51/D5–D2 = 1000	GPIO1 = secondary BCLK output
		R33/D6	Select source of secondary BCLK (primary BCLK or internal BCLK)
	DOUT	R31/D7–D5 = 011	Secondary BCLK obtained from DOUT pin
		R53/D3–D1 = 110	DOUT = secondary BCLK output
		R33/D6	Select source of secondary BCLK (primary BCLK or internal BCLK)
Secondary BCLK (IN)	GPIO1	R31/D7–D5 = 000	Secondary BCLK obtained from GPIO1 pin
		R51/D5–D2 = 0001	GPIO1 enabled as secondary input
Secondary DIN (IN)	GPIO1	R31/D1–D0 = 00	Secondary DIN obtained from GPIO1 pin
		R51/D5–D2 = 0001	GPIO1 enabled as secondary input
Secondary DOUT (OUT)	GPIO1	R51/D5–D2 = 1011	GPIO1 = secondary DOUT
		R33/D0	Select source for secondary DOUT (0 = primary DIN; 1 = DOUT from interface block)

Table 5-44. Generation of ADC_WCLK

ADC_WCLK Direction	Possible Pins	Page 0 Registers	Comment
OUTPUT	GPIO1	R32/D7–D5 = 000	ADC_WCLK obtained from GPIO1 pin
		R51/D5–D2 = 0111	GPIO1 = ADC_WCLK
		R32/D1	Select source of internal ADC_WCLK (0 = DAC_WCLK; 1 = ADC_WCLK)
INPUT	GPIO1	R32/D7–D5 = 000	ADC_WCLK obtained from GPIO1 pin
		R51/D5–D2 = 0001	GPIO1 enabled as secondary input
		R32/D1	Select source of internal ADC_WCLK (0 = DAC_WCLK; 1 = ADC_WCLK)

Copyright © 2009, Texas Instruments Incorporated

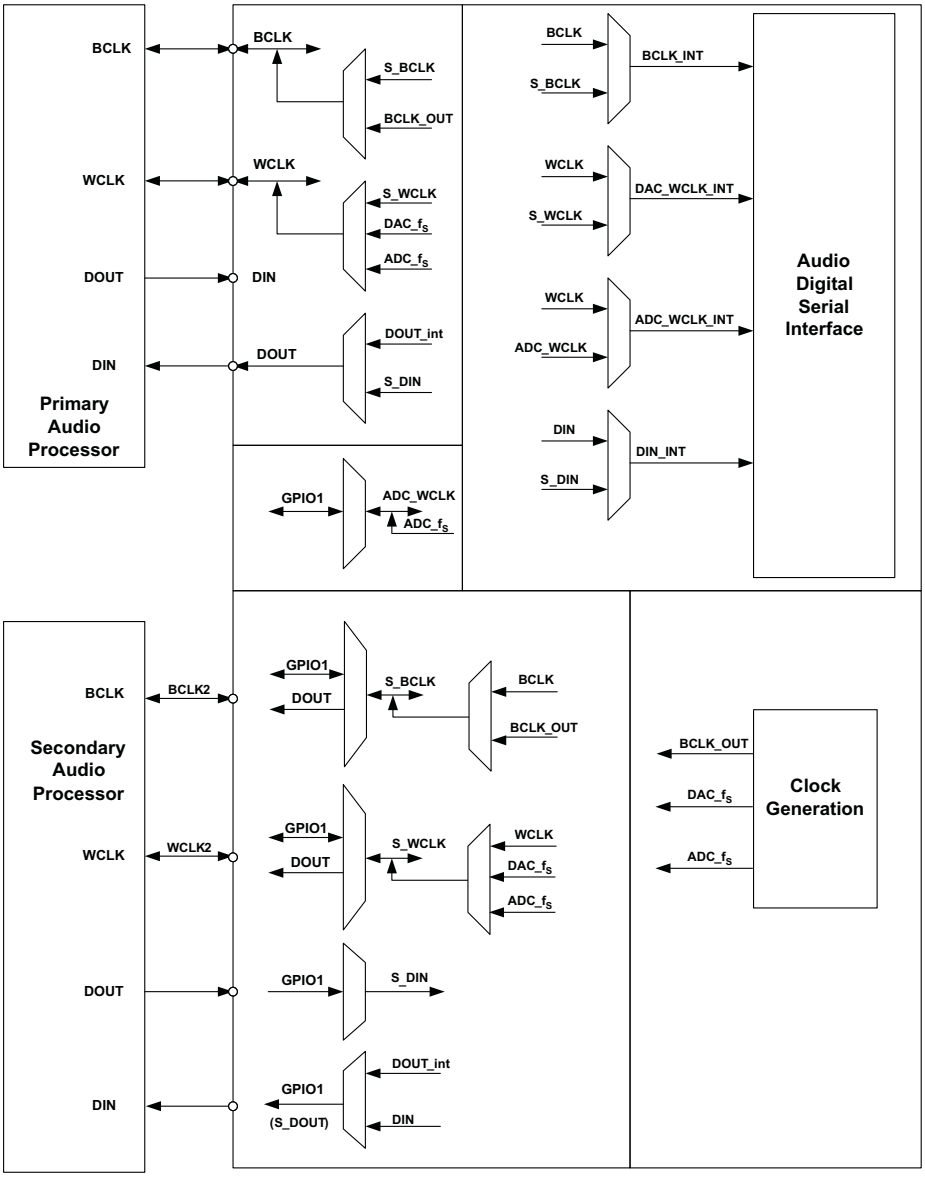

Figure 5-50. Audio Serial Interface Multiplexing

5.7.3 Control Interface

The TLV320AIC3110 control interface supports the I^{2}C communication protocol.

5.7.3.1 I^{2}C Control Mode

The TLV320AIC3110 supports the I^{2}C control protocol, and responds to the I^{2}C address of 0011 000. I^{2}C is a two-wire, open-drain interface supporting multiple devices and masters on a single bus. Devices on the I^{2}C bus only drive the bus lines LOW by connecting them to ground; they never drive the bus lines HIGH. Instead, the bus wires are pulled HIGH by pullup resistors, so the bus wires are HIGH when no device is driving them LOW. This way, two devices cannot conflict; if two devices drive the bus simultaneously, there is no driver contention.

Copyright © 2009, Texas Instruments Incorporated

Communication on the I²C bus always takes place between two devices, one acting as the master and the other acting as the slave. Both masters and slaves can read and write, but slaves can only do so under the direction of the master. Some I²C devices can act as masters or slaves, but the TLV320AIC3110 can only act as a slave device.

An I²C bus consists of two lines, SDA and SCL. SDA carries data, and the SCL signal provides the clock. All data is transmitted across the I²C bus in groups of eight bits. To send a bit on the I²C bus, the SDA line is driven to the appropriate level while SCL is LOW (a LOW on SDA indicates the bit is 0, while a HIGH indicates the bit is 1).

Once the SDA line has settled, the SCL line is brought HIGH, then LOW. This pulse on the SCL line clocks the SDA bit into the receiver shift register.

The I²C bus is bidirectional: the SDA line is used both for transmitting and receiving data. When a master reads from a slave, the slave drives the data line; when a master sends to a slave, the master drives the data line.

Most of the time the bus is idle, no communication is taking place, and both lines are HIGH. When communication is taking place, the bus is active. Only master devices can start communication on the bus. Normally, the data line is only allowed to change state while the clock line is LOW. If the data line changes state while the clock line is HIGH, it is either a START condition or its counterpart, a STOP condition. A START condition is when the clock line is HIGH and the data line goes from HIGH to LOW. A STOP condition is when the clock line is HIGH and the data line goes from LOW to HIGH.

After the master issues a START condition, it sends a byte that selects the slave device for communication. This byte is called the address byte. Each device on an I²C bus has a unique 7-bit address to which it responds. (Slaves can also have 10-bit addresses; see the I²C specification for details.) The master sends an address in the address byte, together with a bit that indicates whether it wishes to read from or write to the slave device.

Every byte transmitted on the I²C bus, whether it is address or data, is acknowledged with an acknowledge bit. When a master has finished sending a byte (eight data bits) to a slave, it stops driving SDA and waits for the slave to acknowledge the byte. The slave acknowledges the byte by pulling SDA LOW. The master then sends a clock pulse to clock the acknowledge bit. Similarly, when a master has finished reading a byte, it pulls SDA LOW to acknowledge this to the slave. It then sends a clock pulse to clock the bit. (Remember that the master always drives the clock line.)

A not-acknowledge is performed by simply leaving SDA HIGH during an acknowledge cycle. If a device is not present on the bus and the master attempts to address it, it receives a not-acknowledge, because no device is present at that address to pull the line LOW.

When a master has finished communicating with a slave, it may issue a STOP condition. When a STOP condition is issued, the bus becomes idle again. A master may also issue another START condition. When a START condition is issued while the bus is active, it is called a repeated START condition.

The TLV320AIC3110 can also respond to and acknowledge a general call, which consists of the master issuing a command with a slave address byte of 00h. This feature is disabled by default, but can be enabled via page 0 / register 34, bit D5.

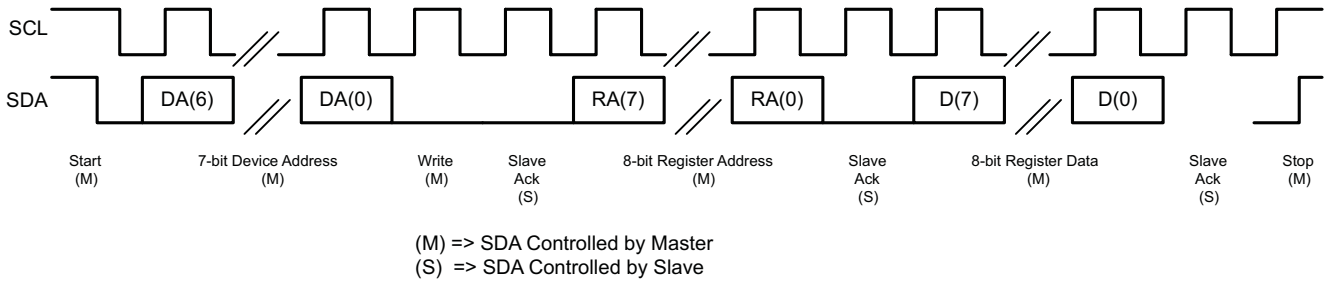

Figure 5-51. I²C Write

Copyright © 2009, Texas Instruments Incorporated

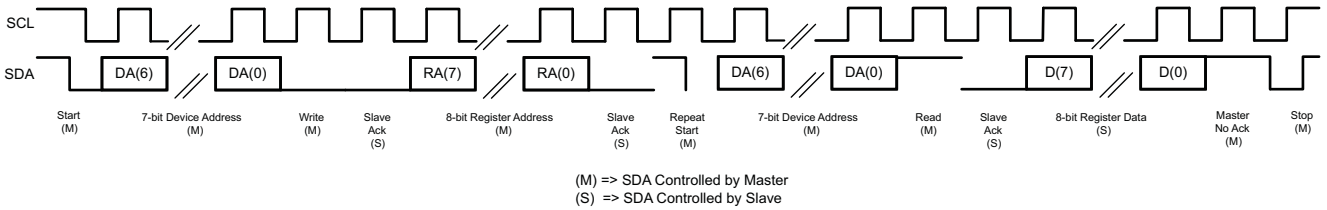

Figure 5-52. I²C Read

In the case of an I²C register write, if the master does not issue a STOP condition, then the device enters auto-increment mode. So in the next eight clocks, the data on SDA is treated as data for the next incremental register.

Similarly, in the case of an I²C register read, after the device has sent out the 8-bit data from the addressed register, if the master issues an ACKNOWLEDGE, the slave takes over control of the SDA bus and transmits for the next eight clocks the data of the next incremental register.

Copyright © 2009, Texas Instruments Incorporated

6 REGISTER MAP

6.1 TLV320AIC3110 Register Map

All features on this device are addressed using the I^2C bus. All of the writable registers can be read back. However, some registers contain status information or data, and are available for reading only.

The TLV320AIC3110 contains several pages of 8-bit registers, and each page can contain up to 128 registers. The register pages are divided up based on functional blocks for this device. Page 0 is the default home page after RESET. Page control is done by writing a new page value into register 0 of the current page.

The control registers for the TLV320AIC3110 are described in detail as follows. All registers are 8 bits in width, with D7 referring to the most-significant bit of each register, and D0 referring to the least-significant bit.

Pages 0, 1, 3, 4, 8–9, 12–13 are available for use; however, all other pages and registers are reserved. Do not read from or write to reserved pages and registers. Also, do not write other than the reset values for the reserved bits and read-only bits of non-reserved registers; otherwise, device functionality failure can occur.

Table 6-1. Summary of Register Map

Page Number	Description
0	Page 0 is the default page on power up. Configuration for serial interface, digital I/O, clocking, ADC, DAC settings, etc.
1	Configuration for analog PGAs, ADC, DAC, output drivers, volume controls, etc.
3	Register 16 controls the MCLK divider that controls the interrupt pulse duration, debounce timing, and detection block clock
4	ADC AGC and filter coefficients
8–9	DAC Buffer A filter and DRC coefficients
12–13	DAC Buffer B filter and DRC coefficients

6.2 Control Registers, Page 0 (Default Page): Clock Multipliers, Dividers, Serial Interfaces, Flags, Interrupts, and GPIOs

Page 0 / Register 0 (0x00): Page Control Register

BIT	READ/ WRITE	RESET VALUE	DESCRIPTION
D7–D0	R/W	0000 0000	0000 0000: Page 0 selected 0000 0001: Page 1 selected ... 1111 1110: Page 254 selected 1111 1111: Page 255 selected

Page 0 / Register 1 (0x01): Software Reset

BIT	READ/ WRITE	RESET VALUE	DESCRIPTION
D7–D1	R/W	0000 000	Reserved. Write only zeros to these bits.
D0	R/W	0	0: Don't care 1: Self-clearing software reset for control register

Page 0 / Register 2 (0x02): Reserved

BIT	READ/ WRITE	RESET VALUE	DESCRIPTION
D7–D0	R	XXXX XXXX	Reserved. Do not write to this register.

Copyright © 2009, Texas Instruments Incorporated

Page 0 / Register 3 (0x03): OT FLAG

BIT	READ/ WRITE	RESET VALUE	DESCRIPTION
D7–D2	R	XXXX XX	Reserved. Do not write to these bits.
D1	R	1	0: Overtemperature protection flag (active-low). Valid only if speaker amplifier is powered up 1: Normal operation
D0	R/W	X	Reserved. Do not write to these bits.

Page 0 / Register 4 (0x04): Clock-Gen Muxing(1)

BIT	READ/ WRITE	RESET VALUE	DESCRIPTION
D7–D4	R/W	0000	Reserved. Write only zeros to these bits.
D3–D2	R/W	00	00: PLL_CLKIN = **MCLK** (device pin) 01: PLL_CLKIN = BCLK (device pin) 10: PLL_CLKIN = GPIO1 (device pin) 11: PLL_CLKIN = DIN (can be used for the system where DAC is not used)
D1–D0	R/W	00	00: CODEC_CLKIN = **MCLK** (device pin) 01: CODEC_CLKIN = BCLK (device pin) 10: CODEC_CLKIN = GPIO1 (device pin) 11: CODEC_CLKIN = PLL_CLK (generated on-chip)

(1) See Section 5.6 for more details on clock generation mutiplexing and dividers.

Page 0 / Register 5 (0x05): PLL P and R-VAL

BIT	READ/ WRITE	RESET VALUE	DESCRIPTION
D7	R/W	0	0: PLL is powered down. 1: PLL is powered up.
D6–D4	R/W	001	000: PLL divider P = 8 001: PLL divider P = 1 010: PLL divider P = 2 ... 110: PLL divider P = 6 111: PLL divider P = 7
D3–D0	R/W	0001	0000: PLL multiplier R = 16 0001: PLL multiplier R = 1 0010: PLL multiplier R = 2 ... 1110: PLL multiplier R = 14 1111: PLL multiplier R = 15

Page 0 / Register 6 (0x06): PLL J-VAL

BIT	READ/ WRITE	RESET VALUE	DESCRIPTION
D7–D6	R/W	00	Reserved. Write only zeros to these bits.
D5–D0	R/W	00 0100	00 0000: Do not use (reserved) 00 0001: PLL multiplier J = 1 00 0010: PLL multiplier J = 2 ... 11 1110: PLL multiplier J = 62 11 1111: PLL multiplier J = 63

Table 6-2. Page 0 / Register 7 (0x07): PLL D-VAL MSB(1)

BIT	READ/ WRITE	RESET VALUE	DESCRIPTION
D7–D6	R/W	00	Reserved. Write only zeros to these bits.
D5–D0	R/W	00 0000	PLL fractional multiplier D-Val MSB bits D[13:8]

(1) Note that this register is updated only when page 0 / register 8 is written immediately after page 0 / register 7.

Copyright © 2009, Texas Instruments Incorporated

Page 0 / Register 8 (0x08): PLL D-VAL LSB(1)

BIT	READ/ WRITE	RESET VALUE	DESCRIPTION
D7–D0	R/W	0000 0000	PLL fractional multiplier D-Val LSB bits D[7:0]

(1) Note that page 0 / Register 8 must be written immediately after page 0 / Register 7.

Page 0 / Registers 9–10: Reserved

BIT	READ/ WRITE	RESET VALUE	DESCRIPTION
D7–D0	R/W	XXXX XXXX	Reserved. Write only zeros to these bits.

Page 0 / Register 11 (0x0B): DAC NDAC_VAL

BIT	READ/ WRITE	RESET VALUE	DESCRIPTION
D7	R/W	0	0: DAC NDAC divider is powered down. 1: DAC NDAC divider is powered up.
D6–D0	R/W	000 0001	000 0000: DAC NDAC divider = 128 000 0001: DAC NDAC divider = 1 000 0010: DAC NDAC divider = 2 ... 111 1110: DAC NDAC divider = 126 111 1111: DAC NDAC divider = 127

Page 0 / Register 12 (0x0C): DAC MDAC_VAL

BIT	READ/ WRITE	RESET VALUE	DESCRIPTION
D7	R/W	0	0: DAC MDAC divider is powered down. 1: DAC MDAC divider is powered up.
D6–D0	R/W	000 0001	000 0000: DAC MDAC divider = 128 000 0001: DAC MDAC divider = 1 000 0010: DAC MDAC divider = 2 ... 111 1110: DAC MDAC divider = 126 111 1111: DAC MDAC divider = 127

Page 0 / Register 13 (0x0D): DAC DOSR_VAL MSB

BIT	READ/ WRITE	RESET VALUE	DESCRIPTION
D7–D2	R/W	0000 00	Reserved. Write only reset vlaues.
D1–D0	R/W	00	DAC OSR (DOSR) Setting **DAC OSR(MSB)** & DAC OSR(LSB) **00** 0000 0000: DOSR=1024 **00** 0000 0001: DOSR=1 **00** 0000 0010: DOSR=2 ... **11** 1111 1110: DOSR=1022 **11** 1111 1111: DOSR=1023 Note: This register is updated when Page-0, Reg-14 is written to immediately after Page-0, Reg-13 Note: DOSR should be a multiple of 2 while using DAC Filter Type A, Multiple of 4 while using DAC Filter Type B and Multiple of 8 while using DAC Filter Type C

Copyright © 2009, Texas Instruments Incorporated

Page 0 / Register 14 (0x0E): DAC DOSR_VAL LSB (1)

BIT	READ/ WRITE	RESET VALUE	DESCRIPTION
D7–D0	R/W	1000 0000	DAC OSR (DOSR) Setting DAC OSR(MSB) & **DAC OSR(LSB)** 00 **0000 0000**: DOSR=1024 00 **0000 0001**: DOSR=1 00 **0000 0010**: DOSR=2 ... 11 **1111 1110**: DOSR=1022 11 **1111 1111**: DOSR=1023 Note: This register should be written immediately after Page-0, Reg-13 Note: DOSR should be a multiple of 2 while using DAC Filter Type A, Multiple of 4 while using DAC Filter Type B and Multiple of 8 while using DAC Filter Type C

(1) Note that page 0 / register 14 must be written to immediately after writing to page 0 / register 13.

Page 0 / Register 15–17: Reserved

BIT	READ/ WRITE	RESET VALUE	DESCRIPTION
D7–D0	R	XXXX XXXX	Reserved. Do not write to these registers.

Page 0 / Register 18 (0x12): ADC NADC_VAL

BIT	READ/ WRITE	RESET VALUE	DESCRIPTION
D7	R/W	0	0: ADC NADC divider is powered down and ADC_CLK = DAC_CLK. 1: ADC NADC divider is powered up.
D6–D0	R/W	000 0001	000 0000: ADC NADC divider = 128 000 0001: ADC NADC divider = 1 000 0010: ADC NADC divider = 2 ... 111 1110: ADC NADC divider = 126 111 1111: ADC NADC divider = 127

Page 0 / Register 19 (0x13): ADC MADC_VAL

BIT	READ/ WRITE	RESET VALUE	DESCRIPTION
D7	R/W	0	0: ADC MADC divider is powered down and ADC_MOD_CLK = DAC_MOD_CLK. 1: ADC MADC divider is powered up.
D6–D0	R/W	000 0001	000 0000: ADC MADC divider = 128 000 0001: ADC MADC divider = 1 000 0010: ADC MADC divider = 2 ... 111 1110: ADC MADC divider = 126 111 1111: ADC MADC divider = 127

Page 0 / Register 20 (0x14): ADC AOSR_VAL

BIT	READ/ WRITE	RESET VALUE	DESCRIPTION
D7–D0	R/W	1000 0000	0000 0000: ADC OSR AOSR divider = 256 0000 0001: ADC OSR AOSR divider = 1 0000 0010: ADC OSR AOSR divider = 2 ... 1111 1110: ADC OSR AOSR divider = 254 1111 1111: ADC OSR AOSR divider = 255

Page 0 / Registers 21–24: Reserved

BIT	READ/ WRITE	RESET VALUE	DESCRIPTION
D7–D0	R	XXXX XXXX	Reserved. Do not write to these registers.

Copyright © 2009, Texas Instruments Incorporated

Page 0 / Registers 25 (0x19): CLKOUT MUX

BIT	READ/ WRITE	RESET VALUE	DESCRIPTION
D7–D3	R/W	0000 0	Reserved
D2–D0	R/W	000	000: CDIV_CLKIN = MCLK (device pin) 001: CDIV_CLKIN = BCLK (device pin) 010: CDIV_CLKIN = DIN (can be used for the systems where DAC is not required) 011: CDIV_CLKIN = PLL_CLK (generated on-chip) 100: CDIV_CLKIN = DAC_CLK (generated on-chip) 101: CDIV_CLKIN = DAC_MOD_CLK (generated on-chip) 110: CDIV_CLKIN = ADC_CLK (generated on-chip) 111: CDIV_CLKIN = ADC_MOD_CLK (generated on-chip)

Page 0 / Registers 26 (0x1A): CLKOUT M_VAL

BIT	READ/ WRITE	RESET VALUE	DESCRIPTION
D7	R/W	0	0: CLKOUT M divider is powered down. 1: CLKOUT M divider is powered up.
D6–D0	R/W	000 0001	000 0000: CLKOUT divider M = 128 000 0001: CLKOUT divider M = 1 000 0010: CLKOUT divider M = 2 ... 111 1110: CLKOUT divider M = 126 111 1111: CLKOUT divider M = 127

Page 0 / Register 27 (0x1B): Codec Interface Control

BIT	READ/ WRITE	RESET VALUE	DESCRIPTION
D7–D6	R/W	00	00: Codec interface = I^2S DSP01: Codec Interface = 10: Codec interface = RJF 11: Codec interface = LJF
D5–D4	R/W	00	00: Codec interface word length = 16 bits 01: Codec interface word length = 20 bits 10: Codec interface word length = 24 bits 11: Codec interface word length = 32 bits
D3	R/W	0	0: BCLK is input. 1: BCLK is output.
D2	R/W	0	0: WCLK is input. 1: WCLK is output.
D1	R/W	0	Reserved
D0	R/W	0	Driving **DOUT** to High-Impedance for the Extra BCLK Cycle When Data Is Not Being Transferred 0: Disabled 1: Enabled

Page 0 / Register 28 (0x1C): Data-Slot Offset Programmability

BIT	READ/ WRITE	RESET VALUE	DESCRIPTION
D7–D0	R/W	0000 0000	Offset (Measured With Respect to WCLK Rising Edge in DSP Mode) 0000 0000: Offset = 0 BCLKs 0000 0001: Offset = 1 BCLK 0000 0010: Offset = 2 BCLKs ... 1111 1110: Offset = 254 BCLKs 1111 1111: Offset = 255 BCLKs

Copyright © 2009, Texas Instruments Incorporated

Page 0 / Register 29 (0x1D): Codec Interface Control 2

BIT	READ/ WRITE	RESET VALUE	DESCRIPTION
D7–D6	R/W	00	Reserved
D5	R/W	0	0: DIN-to-DOUT loopback is disabled. 1: DIN-to-DOUT loopback is enabled.
D4	R/W	0	0: ADC-to-DAC loopback is disabled. 1: ADC-to-DAC loopback is enabled.
D3	R/W	0	0: BCLK is not inverted (valid for both primary and secondary BCLK). 1: BCLK is inverted (valid for both primary and secondary BCLK).
D2	R/W	0	BCLK and WCLK Active Even With Codec Powered Down (Valid for Both Primary and Secondary BCLK) 0: Disabled 1: Enabled
D1–D0	R/W	00	00: BDIV_CLKIN = DAC_CLK (generated on-chip) 01: BDIV_CLKIN = DAC_MOD_CLK (generated on-chip) 10: BDIV_CLKIN = ADC_CLK (generated on-chip) 11: BDIV_CLKIN = ADC_MOD_CLK (generated on-chip)

Page 0 / Register 30 (0x1E): BCLK N_VAL

BIT	READ/ WRITE	RESET VALUE	DESCRIPTION
D7	R/W	0	0: BCLK N-divider is powered down. 1: BCLK N-divider is powered up.
D6–D0	R/W	000 0001	000 0000: BCLK divider N = 128 000 0001: BCLK divider N = 1 000 0010: BCLK divider N = 2 ... 111 1110: BCLK divider N = 126 111 1111: BCLK divider N = 127

Page 0 / Register 31 (0x1F): Codec Secondary Interface Control 1

BIT	READ/ WRITE	RESET VALUE	DESCRIPTION
D7–D5	R/W	000	000: Secondary BCLK is obtained from GPIO1 pin. 001: Reserved. 010: Reserved. 011: Secondary BCLK is obtained from DOUT pin. 100: Reserved. 101: Reserved. 110: Reserved. 111: Reserved.
D4–D2	R/W	000	000: Secondary WCLK is obtained from GPIO1 pin. 001: Reserved. 010: Reserved. 011: Secondary WCLK is obtained from DOUT pin. 100: Reserved. 101: Reserved. 110: Reserved. 111: Reserved.
D1–D0	R/W	00	00: Secondary DIN is obtained from the GPIO1 pin. 01: Reserved. 10: Reserved. 11: Reserved.

Copyright © 2009, Texas Instruments Incorporated

Page 0 / Register 32 (0x20): Codec Secondary Interface Control 2

BIT	READ/ WRITE	RESET VALUE	DESCRIPTION
D7–D5	R/W	000	000: ADC_WCLK is obtained from GPIO1 pin. 001: Reserved. 010: Reserved. 011: Reserved 100: Reserved. 101: Reserved. 110: Reserved. 111: Reserved.
D4	R/W	0	Reserved
D3	R/W	0	0: Primary BCLK is fed to codec serial-interface and ClockGen blocks. 1: Secondary BCLK is fed to codec serial-interface and ClockGen blocks.
D2	R/W	0	0: Primary WCLK is fed to codec serial-interface block. 1: Secondary WCLK is fed to codec serial-interface block.
D1	R/W	0	0: ADC_WCLK used in the codec serial-interface block is the same as DAC_WCLK. 1: ADC_WCLK used in the codec serial-interface block = ADC_WCLK.
D0	R/W	0	0: Primary DIN is fed to codec serial-interface block. 1: Secondary DIN is fed to codec serial-interface block.

Page 0 / Register 33 (0x21): Codec Secondary Interface Control 3

BIT	READ/ WRITE	RESET VALUE	DESCRIPTION
D7	R/W	0	0: Primary BCLK output = internally generated BCLK clock 1: Primary BCLK output = secondary BCLK
D6	R/W	0	0: Secondary BCLK output = primary BCLK 1: Secondary BCLK output = internally generated BCLK clock
D5–D4	R/W	00	00: Primary WCLK output = internally generated DAC_f_S 01: Primary WCLK output = internally generated ADC_f_S clock 10: Primary WCLK output = secondary WCLK 11: Reserved
D3–D2	R/W	00	00: Secondary WCLK output = primary WCLK 01: Secondary WCLK output = internally generated DAC_f_S clock 10: Secondary WCLK output = internally generated ADC_f_S clock 11: Reserved
D1	R/W	0	0: Primary DOUT = DOUT from codec serial-interface block 1: Primary DOUT = secondary DIN
D0	R/W	0	0: Secondary DOUT = primary DIN 1: Secondary DOUT = DOUT from codec serial interface block

Page 0 / Register 34 (0x22): I^2C Bus Condition

BIT	READ/ WRITE	RESET VALUE	DESCRIPTION
D7–D6	R/W	00	Reserved. Write only the reset value to these bits.
D5	R/W	0	0: I^2C general-call address is ignored. 1: Device accepts I^2C general-call address.
D4–D0	R/W	0 0000	Reserved. Write only zeros to these bits.

Page 0 / Register 35: Reserved

BIT	READ/ WRITE	RESET VALUE	DESCRIPTION
D7–D0	R/W	XXXX XXXX	Reserved. Write only zeros to these bits.

Copyright © 2009, Texas Instruments Incorporated

Page 0 / Register 36 (0x24): ADC Flag Register

BIT	READ/ WRITE	RESET VALUE	DESCRIPTION
D7	R	0	0: ADC PGA applied gain ≠ programmed gain 1: ADC PGA applied gain = programmed gain
D6	R	0	0: ADC powered down 1: ADC powered up
D5(1)	R	0	0: AGC not saturated 1: AGC applied gain = maximum applicable gain by AGC
D4–D0	R/W	X XXXX	Reserved. Write only zeros to these bits.

(1) Sticky flag bIts. These are read-only bits. They are automatically cleared once they are read and are set only if the source trigger occurs again.

Page 0 / Register 37 (0x25): DAC Flag Register

BIT	READ/ WRITE	RESET VALUE	DESCRIPTION
D7	R	0	0: Left-channel DAC powered down 1: Left-channel DAC powered up
D6	R/W	X	Reserved. Write only zero to this bit.
D5	R	0	0: HPl driver powered down 1: HPL driver powered up
D4	R	0	0: Left-channel class-D driver powered down 1: Left-channel class-D driver powered up
D3	R	0	0: Right-channel DAC powered down 1: Right-channel DAC powered up
D2	R/W	X	Reserved. Write only zero to this bit.
D1	R	0	0: HPR driver powered down 1: HPR driver powered up
D0	R	0	0: Right-channel class-D driver powered down 1: Right-channel class-D driver powered up

Page 0 / Register 38 (0x26): DAC Flag Register

BIT	READ/ WRITE	RESET VALUE	DESCRIPTION
D7–D5	R/W	XXX	Reserved. Do not write to these bits.
D4	R	0	0: Left-channel DAC PGA applied gain ≠ programmed gain 1: Left-channel DAC PGA applied gain = programmed gain
D3–D1	R/W	XXX	Reserved. Write only zeros to these bits.
D0	**R**	0	0: Right-channel DAC PGA applied gain ≠ programmed gain 1: Right-channel DAC PGA applied gain = programmed gain

Copyright © 2009, Texas Instruments Incorporated

Page 0 / Register 39 (0x27): Overflow Flags

BIT	READ/ WRITE	RESET VALUE	DESCRIPTION
D7(1)	R	0	Left-Channel DAC Overflow Flag 0: Overflow has not occurred. 1: Overflow has occurred.
D6(1)	R	0	Right-Channel DAC Overflow Flag 0: Overflow has not occurred. 1: Overflow has occurred.
D5(1)	R	0	DAC Barrel Shifter Output Overflow Flag 0: Overflow has not occurred. 1: Overflow has occurred.
D4	R/W	0	Reserved. Write only zeros to these bits.
D3(1)	R	0	Delta-Sigma Mono ADC Overflow Flag 0: Overflow has not occurred. 1: Overflow has occurred.
D2	R/W	0	Reserved. Write only zero to this bit.
D1(1)	R	0	ADC Barrel Shifter Output Overflow Flag 0: Overflow has not occurred. 1: Overflow has occurred.
D0	R/W	0	Reserved. Write only zero to this bit.

(1) Sticky flag bIts. These are read-only bits. They are automatically cleared once they are read and are set only if the source trigger occurs again.

Page 0 / Registers 40–43: Reserved

BIT	READ/ WRITE	RESET VALUE	DESCRIPTION
D7–D0	R	XXXX XXXX	Reserved. Do not write to these registers.

Page 0 / Register 44: Reserved

BIT	READ/ WRITE	RESET VALUE	DESCRIPTION
D7–D0	R	XXXX XXXX	Reserved. Do not write to this register.

Page 0 / Register 45 (0x2D): Interrupt Flags—ADC

BIT	READ/ WRITE	RESET VALUE	DESCRIPTION
D7	R/W	0	Reserved. Write only zero to this bit.
D6(1)	R	0	0: ADC signal power greater than noise threshold for AGC. 1: ADC signal power less than noise threshold for AGC.
D5–D3	R	000	Reserved. Write only zeroes.
D2	R	0	0: DC measurement using Delta Sigma Audio ADC is not available 1: DC measurement using Delta Sigma Audio ADC is not available
D1–D0	R/W	00	Reserved. Write only zeros to these bits.

(1) Sticky flag bIts. These are read-only bits. They are automatically cleared once they are read and are set only if the source trigger occurs again.

Copyright © 2009, Texas Instruments Incorporated

Page 0 / Register 46 (0x2E): Interrupt Flags – DAC

BIT	READ/ WRITE	RESET VALUE	DESCRIPTION
D7	R	0	0: No short circuit detected at HPL/left class-D driver 1: Short circuit detected at HPL/left class-D driver
D6	R	0	0: No short circuit detected at HPR/right class-D driver 1: Short circuit detected at HPR/right class-D driver
D5	R	X	0: No headset button pressed 1: Headset button pressed
D4	R	X	0: Headset removal detected 1: Headset insertion detected
D3	R	0	0: Left DAC signal power is below signal threshold of DRC. 1: Left DAC signal power is above signal threshold of DRC.
D2	R	0	0: Right DAC signal power is below signal threshold of DRC. 1: Right DAC signal power is above signal threshold of DRC.
D1–D0	R	00	Reserved.

Page 0 / Register 47 (0x2F): Interrupt Flags – ADC

BIT	READ/ WRITE	RESET VALUE	DESCRIPTION
D7	R/W	0	Reserved
D6	R	0	0: Delta-sigma mono ADC signal power greater than noise threshold for left AGC 1: Delta-sigma mono ADC signal power less than noise threshold for left AGC
D5	R/W	0	Reserved
D4–D3	R	00	Reserved.
D2	R	0	0: DC measurement using Delta Sigma Audio ADC is not available 1: DC measurement using Delta Sigma Audio ADC is not available
D1–D0	R/W	00	Reserved. Write only zeros to these bits.

Page 0 / Register 48 (0x30): INT1 Control Register

BIT	READ/ WRITE	RESET VALUE	DESCRIPTION
D7	R/W	0	0: Headset-insertion detect interrupt is not used in the generation of INT1 interrupt. 1: Headset-insertion detect interrupt is used in the generation of INT1 interrupt.
D6	R/W	0	0: Button-press detect interrupt is not used in the generation of INT1 interrupt. 1: Button-press detect interrupt is used in the generation of INT1 interrupt.
D5	R/W	0	0: DAC DRC signal-power interrupt is not used in the generation of INT1 interrupt. 1: DAC DRC signal-power interrupt is used in the generation of INT1 interrupt.
D4	R/W	0	0: ADC AGC noise interrupt is not used in the generation of INT1 interrupt. 1: ADC AGC noise interrupt is used in the generation of INT1 interrupt.
D3	R/W	0	0: Short-circuit interrupt is not used in the generation of INT1 interrupt. 1: Short-circuit interrupt is used in the generation of INT1 interrupt.
D2	R	0	Reserved. Write only zero.
D1	R/W	0	0: DC measurement using Delta Sigma Audio ADC data-available interrupt is not used in the generation of INT1 interrupt 1: DC measurement using Delta Sigma Audio ADC data-available interrupt is used in the generation of INT1 interrupt
D0	R/W	0	0: INT1 is only one pulse (active-high) of typical 2-ms duration. 1: INT1 is multiple pulses (active-high) of typical 2-ms duration and 4-ms period, until flag registers 44 and 45 are read by the user.

Copyright © 2009, Texas Instruments Incorporated

Page 0 / Register 49 (0x31): INT2 Control Register

BIT	READ/ WRITE	RESET VALUE	DESCRIPTION
D7	R/W	0	0: Headset-insertion detect interrupt is not used in the generation of INT2 interrupt. 1: Headset-insertion detect interrupt is used in the generation of INT2 interrupt.
D6	R/W	0	0: Button-press detect interrupt is not used in the generation of INT2 interrupt. 1: Button-press detect interrupt is used in the generation of INT2 interrupt.
D5	R/W	0	0: DAC DRC signal-power interrupt is not used in the generation of INT2 interrupt. 1: DAC DRC signal-power interrupt is used in the generation of INT2 interrupt.
D4	R/W	0	0: ADC AGC noise interrupt is not used in the generation of INT2 interrupt. 1: ADC AGC noise interrupt is used in the generation of INT2 interrupt.
D3	R/W	0	0: Short-circuit interrupt is not used in the generation of INT2 interrupt. 1: Short-circuit interrupt is used in the generation of INT2 interrupt.
D2	R	0	Reserved. Write only zero.
D1	R/W	0	0: DC measurement using the audio ADC data-available interrupt is not used in the generation of INT2 interrupt 1: DC measurement using the audio ADC data-available interrupt is used in the generation of INT2 interrupt
D0	R/W	0	0: INT2 is only one pulse (active-high) of typical 2-ms duration. 1: INT2 is multiple pulses (active-high) of typical 2-ms duration and 4-ms period, until flag registers 44 and 45 are read by the user.

Page 0 / Register 50 (0x32): Reserved

BIT	READ/ WRITE	RESET VALUE	DESCRIPTION
D7-D0	R/W	0000 0000	Reserved. Write only reset values.

Page 0 / Register 51 (0x33): GPIO1 In/Out Pin Control

BIT	READ/ WRITE	RESET VALUE	DESCRIPTION
D7–D6	R/W	XX	Reserved. Do not write any value other than reset value.
D5–D2	R/W	0000	0000: GPIO1 disabled (input and output buffers powered down) 0001: GPIO1 is in input mode (can be used as secondary BCLK input, secondary WCLK input, secondary DIN input, ADC_WCLK input, Dig_Mic_In or in ClockGen block). 0010: GPIO1 is used as general-purpose input (GPI). 0011: GPIO1 output = general-purpose output 0100: GPIO1 output = CLKOUT output 0101: GPIO1 output = INT1 output 0110: GPIO1 output = INT2 output 0111: GPIO1 output = ADC_WCLK output for codec interface 1000: GPIO1 output = secondary BCLK output for codec interface 1001: GPIO1 output = secondary WCLK output for codec interface 1010: GPIO1 output = ADC_MOD_CLK output for the digital microphone 1011: GPIO1 output = secondary DOUT for codec interface 1100: Reserved 1101: Reserved 1110: Reserved 1111: Reserved
D1	R	X	GPIO1 input buffer value
D0	R/W	0	0: GPIO1 general-purpose output value = 0 1: GPIO1 general-purpose output value = 1

Page 0 / Register 52 (0x34): Reserved

BIT	READ/ WRITE	RESET VALUE	DESCRIPTION
D7–D0	R/W	XXXX XXXX	Reserved. Do not write any value other than reset value.

Copyright © 2009, Texas Instruments Incorporated

Page 0 / Register 53 (0x35): DOUT (OUT Pin) Control

BIT	READ/ WRITE	RESET VALUE	DESCRIPTION
D7–D5	R/W	000	Reserved
D4	R/W	1	0: DOUT bus keeper enabled 1: DOUT bus keeper disabled
D3–D1	R/W	001	000: DOUT disabled (output buffer powered down) 001: DOUT = primary DOUT output for codec interface 010: DOUT = general-purpose output 011: DOUT = CLKOUT output 100: DOUT = INT1 output 101: DOUT = INT2 output 110: DOUT = secondary BCLK output for codec interface 111: DOUT = secondary WCLK output for codec interface
D0	R/W	0	0: DOUT general-purpose output value = 0 1: DOUT general-purpose output value = 1

Page 0 / Register 54 (0x36): DIN (IN Pin) Control

BIT	READ/ WRITE	RESET VALUE	DESCRIPTION
D7–D3	R/W	0000 0	Reserved
D2–D1	R/W	01	00: DIN disabled (input buffer powered down) 01: DIN enabled (can be used as DIN for codec interface, Dig_Mic_In or in ClockGen block) 10: DIN is used as general-purpose input (GPI) 11: Reserved
D0	R	X	DIN input-buffer value

Page 0 / Register 55–59 : Reserved

BIT	READ/ WRITE	RESET VALUE	DESCRIPTION
D7–D0	R	XXXX XXXX	Reserved. Do not write to these registers.

Page 0 / Register 60 (0x3C): DAC Processing Blocks Selection

BIT	READ/ WRITE	RESET VALUE	DESCRIPTION
D7–D5	R/W	000	Reserved. Write only default value.
D4–D0	R/W	0 0001	0 0000: Reserved. Write only reset value. 0 0001: DAC signal-processing block PRB_P1 0 0010: DAC signal-processing block PRB_P2 0 0011: DAC signal-processing block PRB_P3 0 0100: DAC signal-processing block PRB_P4 ... 1 1000: DAC signal-processing block PRB_P24 1 1001: DAC signal-processing block PRB_P25 1 1010–1 1111: Reserved. Do not use.

Copyright © 2009, Texas Instruments Incorporated

Page 0 / Register 61 (0x3D): ADC Processing Blocks Selection

BIT	READ/ WRITE	RESET VALUE	DESCRIPTION
D7–D5	R/W	000	Reserved. Write only default values.
D4–D0	R/W	0 0100	0 0000: Reserved. Write only reset value. 0 0001–0 0011: Reserved 0 0100: ADC signal-processing block PRB_R4 0 0101: ADC signal-processing block PRB_R5 0 0110: ADC signal-processing block PRB_R6 0 0111–01001: Reserved 0 1010: ADC signal-processing block PRB_R10 0 1011: ADC signal-processing block PRB_R11 0 1100: ADC signal-processing Block PRB_R12 0 1101–0 1111: Reserved 1 0000: ADC signal-processing block PRB_R16 1 0001: ADC signal-processing block PRB_R17 1 0010: ADC signal-processing block PRB_R18 1 0011–1 1111: Reserved. Do not write these sequences to these bits.

Page 0 / Register 62 (0x3E): Reserved

BIT	READ/ WRITE	RESET VALUE	DESCRIPTION
D7–D0	R	0000 0000	Reserved. write only reset values.

Page 0 / Register 63 (0x3F): DAC Data-Path Setup

BIT	READ/ WRITE	RESET VALUE	DESCRIPTION
D7	R/W	0	0: Left-channel DAC is powered down. 1: Left-channel DAC is powered up.
D6	R/W	0	0: Right-channel DAC is powered down. 1: Right-channel DAC is powered up.
D5–D4	R/W	01	00: Left-channel DAC data path = off 01: Left-channel DAC data path = left data 10: Left-channel DAC data path = right data 11: Left-channel DAC data path = left-channel and right-channel data [(L + R)/2]
D3–D2	R/W	01	00: Right-channel DAC data path = off 01: Right-channel DAC data path = right data 10: Right-channel DAC data path = left data 11: Right-channel DAC data path = left-channel and right-channel data [(L + R)/2]
D1–D0	R/W	00	00: DAC channel volume control soft-stepping is enabled for one step per sample period. 01: DAC channel volume control soft-stepping is enabled for one step per two sample periods. 10: DAC channel volume control soft-stepping is disabled. 11: Reserved. Do not write this sequence to these bits.

Page 0 / Register 64 (0x40): DAC VOLUME CONTROL

BIT	READ/ WRITE	RESET VALUE	DESCRIPTION
D7–D4	R/W	0000	Reserved. Write only zeros to these bits.
D3	R/W	1	0: Left-channel DAC not muted 1: Left-channel DAC muted
D2	R/W	1	0: Right-channel DAC not muted 1: Right-channel DAC muted
D1–D0	R/W	00	00: Left and right channels have independent volume control. 01: Left-channel volume control Is the programmed value of right-channel volume control. 10: Right-channel volume control is the programmed value of left-channel volume control. 11: Same as 00

Copyright © 2009, Texas Instruments Incorporated

Page 0 / Register 65 (0x41): DAC Left Volume Control

BIT	READ/ WRITE	RESET VALUE	DESCRIPTION
D7–D0	R/W	0000 0000	0111 1111–0011 0001: Do not use. 0011 0000: Left-channel DAC digital volume = 24 dB 0010 1111: Left-channel DAC digital volume = 23.5 dB ... 0000 0001: Left-channel DAC digital volume = 0.5 dB 0000 0000: Left-channel DAC digital volume = 0 dB 1111 1111: Left-channel DAC digital volume = –0.5 dB ... 1000 0010: Left-channel DAC digital volume = –63 dB 1000 0001: Left-channel DAC digital volume = –63.5 dB 1000 0000: Reserved. Do not use.

Page 0 / Register 66 (0x42): DAC Right Volume Control

BIT	READ/ WRITE	RESET VALUE	DESCRIPTION
D7–D0	R/W	0000 0000	0111 1111–0011 0001: Do not use. 0011 0000: Right-channel DAC digital volume = 24 dB 0010 1111: Right-channel DAC digital volume = 23.5 dB ... 0000 0001: Right-channel DAC digital volume = 0.5 dB 0000 0000: Right-channel DAC digital volume = 0 dB 1111 1111: Right-channel DAC digital volume = –0.5 dB ... 1000 0010: Right-channel DAC digital volume = –63 dB 1000 0001: Right-channel DAC digital volume = –63.5 dB 1000 0000: Reserved. Do not use.

Page 0 / Register 67 (0x43): Headset Detection

BIT	READ/ WRITE	RESET VALUE	DESCRIPTION
D7	R/W	0	0: Headset detection disabled 1: Headset detection enabled
D6–D5	R	XX	00: No headset detected 01: Headset without microphone is detected 10: Reserved 11: Headset with microphone is detected
D4–D2	R/W	000	Debounce Programming for Glitch Rejection During Headset Detection(1) 000: 16 ms (sampled with 2-ms clock) 001: 32 ms (sampled with 4-ms clock) 010: 64 ms (sampled with 8-ms clock) 011: 128 ms (sampled with 16-ms clock) 100: 256 ms (sampled with 32-ms clock) 101: 512 ms (sampled with 64-ms clock) 110: Reserved 111: Reserved
D1–D0	R/W	00	Debounce Programming for Glitch Rejection During Headset Button-Press Detection 00: 0 ms 01: 8 ms (sampled with 1-ms clock) 10: 16 ms (sampled with 2-ms clock) 11: 32 ms (sampled with 4-ms clock)

(1) Note that these times are generated using the 1 MHz reference clock which is defined in page 3 / register 16.

Copyright © 2009, Texas Instruments Incorporated

Page 0 / Register 68 (0x44): DRC Control 1

BIT	READ/ WRITE	RESET VALUE	DESCRIPTION
D7	R/W	0	Reserved. Write only the reset value to these bits.
D6	R/W	0	0: DRC disabled for left channel 1: DRC enabled for left channel
D5	R/W	0	0: DRC disabled for right channel 1: DRC enabled for right channel
D4–D2	R/W	011	000: DRC threshold = –3 dB 001: DRC threshold = –6 dB 010: DRC threshold = –9 dB 011: DRC threshold = –12 dB 100: DRC threshold = –15 dB 101: DRC threshold = –18 dB 110: DRC threshold = –21 dB 111: DRC threshold = –24 dB
D1–D0	R/W	11	00: DRC hysteresis = 0 dB 01: DRC hysteresis = 1 dB 10: DRC hysteresis = 2 dB 11: DRC hysteresis = 3 dB

Page 0 / Register 69 (0x45): DRC Control 2

BIT	READ/ WRITE	RESET VALUE	DESCRIPTION
D	R	0	Reserved. Write only the reset value to these bits.
D6–D3	R/W	0111	DRC Hold Programmability 0000: DRC hold disabled 0001:DRC hold time = 32 DAC word clocks 0010: DRC hold time = 64 DAC word clocks 0011: DRC hold time = 128 DAC word clocks 0100: DRC hold time = 256 DAC word clocks 0101: DRC hold time = 512 DAC word clocks ... 1110: DRC hold time = 4 × 32,768 DAC word clocks 1111: DRC hold time = 5 × 32,768 DAC word clocks
D2-D0		000	Reserved. Write only the reset value to these bits.

Page 0 / Register 70 (0x46): DRC Control 3

BIT	READ/ WRITE	RESET VALUE	DESCRIPTION
D7–D4	R/W	0000	0000: DRC attack rate = 4 dB per DAC Word Clock 0001: DRC attack rate = 2 dB per DAC word clock 0010: DRC attack rate = 1 dB per DAC word clock ... 1110: DRC attack rate = 2.4414e–5 dB per DAC word clock 1111: DRC attack rate = 1.2207e–5 dB per DAC word clock
D3–D0	R/W	0000	0000: DRC decay rate = 1.5625e–2 dB per DAC word clock 0001: DRC decay rate = 7.8125e–3 dB per DAC word clock 0010: DRC decay rate = 3.9062e–3 dB per DAC word clock ... 1110: DRC decay rate = 9.5367e–7 dB per DAC word clock 1111: DRC decay rate = 4.7683e–7 dB per DAC word clock

Copyright © 2009, Texas Instruments Incorporated

Page 0 / Register 71 (0x47): Left Beep Generator (1)

BIT	READ/ WRITE	RESET VALUE	DESCRIPTION
D7	R/W	0	0: Beep generator is disabled. 1: Beep generator is enabled (self-clearing based on beep duration).
D6	R/W	0	Reserved. Write only reset value.
D5–D0	R/W	00 0000	00 0000: Left-channel beep volume control = 2 dB 00 0001: Left-channel beep volume control = 1 dB 00 0010: Left-channel beep volume control = 0 dB 00 0011: Left-channel beep volume control = –1 dB ... 11 1110: Left-channel beep volume control = –60 dB 11 1111: Left-channel beep volume control = –61 dB

(1) The beep generator is only available in PRB_P25 DAC processing mode.

Page 0 / Register 72 (0x48): Right Beep Generator(1)

BIT	READ/ WRITE	RESET VALUE	DESCRIPTION
D7–D6	R/W	00	00: Left and right channels have independent beep volume control. 01: Left-channel beep volume control is the programmed value of right-channel beep volume control. 10: Right-channel beep volume control is the programmed value of left-channel beep volume control. 11: Same as 00
D5–D0	R/W	00 0000	00 0000: Right-channel beep volume control = 2 dB 00 0001: Right-channel beep volume control = 1 dB 00 0010: Right-channel beep volume control = 0 dB 00 0011: Right-channel beep volume control = –1 dB ... 11 1110: Right-channel beep volume control = –60 dB 11 1111: Right-channel beep volume control = –61 dB

(1) The beep generator is only available in PRB_P25 DAC processing mode.

Page 0 / Register 73 (0x49): Beep Length MSB

BIT	READ/ WRITE	RESET VALUE	DESCRIPTION
D7–D0	R/W	0000 0000	8 MSBs out of 24 bits for the number of samples for which the beep must be generated.

Page 0 / Register 74 (0x4A): Beep Length Middle Bits

BIT	READ/ WRITE	RESET VALUE	DESCRIPTION
D7–D0	R/W	0000 0000	8 middle bits out of 24 bits for the number of samples for which the beep must be generated.

Page 0 / Register 75 (0x4B): Beep Length LSB

BIT	READ/ WRITE	RESET VALUE	DESCRIPTION
D7–D0	R/W	1110 1110	8 LSBs out of 24 bits for the number of samples for which beep need to be generated.

Page 0 / Register 76 (0x4C): Beep Sin(x) MSB

BIT	READ/ WRITE	RESET VALUE	DESCRIPTION
D7–D0	R/W	0001 0000	8 MSBs out of 16 bits for $\sin(2\pi \times f_{in}/f_S)$, where f_{in} is the beep frequency and f_S is the DAC sample rate.

Page 0 / Register 77 (0x4D): Beep Sin(x) LSB

BIT	READ/ WRITE	RESET VALUE	DESCRIPTION
D7–D0	R/W	1101 1000	8 LSBs out of 16 bits for $\sin(2\pi \times f_{in}/f_S)$, where f_{in} is the beep frequency and f_S is the DAC sample rate.

Copyright © 2009, Texas Instruments Incorporated

Page 0 / Register 78 (0x4E): Beep Cos(x) MSB

BIT	READ/ WRITE	RESET VALUE	DESCRIPTION
D7–D0	R/W	0111 1110	8 MSBs out of 16 bits for cos(2π × f_{in}/f_S), where f_{in} is the beep frequency and f_S is the DAC sample rate.

Page 0 / Register 79 (0x4F): Beep Cos(x) LSB

BIT	READ/ WRITE	RESET VALUE	DESCRIPTION
D7–D0	R/W	1110 0011	8 LSBs out of 16 bits for cos(2π × f_{in}/f_S), where f_{in} is the beep frequency and f_S is the DAC sample rate.

Page 0 / Register 80: Reserved

BIT	READ/ WRITE	RESET VALUE	DESCRIPTION
D7–D0	R/W	XXXX XXXX	Reserved. Write only the reset value to these bits.

Page 0 / Register 81 (0x51): ADC Digital Mic

BIT	READ/ WRITE	RESET VALUE	DESCRIPTION
D7	R/W	0	0: ADC channel is powered down. 1: ADC channel is powered up.
D6	R/W	0	Reserved
D5–D4	R/W	00	00: Digital microphone input is obtained from GPIO1 pin. 01: Reserved. 10: Digital microphone input is obtained from DIN pin. 11: Reserved.
D3	R/W	0	0: Digital microphone is not enabled for delta-sigma mono ADC channel. 1: Digital microphone is enabled for delta-sigma mono ADC channel
D2	R/W	0	Reserved
D1–D0	R/W	00	00: ADC channel volume control soft-stepping is enabled for one step per sample period. 01: ADC channel volume control soft-stepping is enabled for one step per two sample periods. 10: ADC channel volume control soft-stepping is disabled. 11: Reserved. Do not write this sequence to these bits.

Page 0 / Register 82 (0x52): ADC Digital Volume Control Fine Adjust

BIT	READ/ WRITE	RESET VALUE	DESCRIPTION
D7	R/W	1	0: ADC channel not muted 1: ADC channel muted
D6–D4	R/W	000	Delta-Sigma Mono ADC Channel Volume Coontrol Fine Gain 000: 0 dB 001: –0.1 dB 010: –0.2 dB 011: –0.3 dB 100: –0.4 dB 101–111: Reserved
D3–D0	R/W	0000	Reserved. Write only zeros to these bits.

Page 0 / Register 83 (0x53): ADC Digital Volume Control Coarse Adjust

BIT	READ/ WRITE	RESET VALUE	DESCRIPTION
D7	R/W	0	Reserved
D6–D0		000 0000	Delta-Sigma Mono ADC Channel Volume Control Coarse Gain 000 0000–010 0111: Reserved 010 1000: –12 dB 010 1001: –11.5 dB ... 110 0111: 19.5 dB 110 1000: 20 dB 110 1001–111 1111: Reserved

Copyright © 2009, Texas Instruments Incorporated

Page 0 / Registers 84–85: Reserved

BIT	READ/ WRITE	RESET VALUE	DESCRIPTION
D7	R/W	XXXX XXXX	Reserved. Write only the reset value to these bits.

Page 0 / Register 86 (0x56): AGC Control 1

BIT	READ/ WRITE	RESET VALUE	DESCRIPTION
D7	R/W	0	0: AGC disabled 1: AGC enabled
D6–D4	R/W	000	000: AGC target level = –5.5 dB 001: AGC target level = –8 dB 010: AGC target level = –10 dB 011: AGC target level = –12 dB 100: AGC target level = –14 dB 101: AGC target level = –17 dB 110: AGC target level = –20 dB 111: AGC target level = –24 dB
D3–D0	R/W	0000	Reserved. Write only zeros to these bits.

Page 0 / Register 87 (0x57): AGC Control 2

BIT	READ/ WRITE	RESET VALUE	DESCRIPTION
D7–D6	R/W	00	00: AGC hysterysis setting of 1 dB 01: AGC hysterysis setting of 2 dB 10: AGC hysterysis setting of 4 dB 11: AGC hysterysis disabled
D5–D1	R/W	00 000	00 000: AGC noise/silence detection is disabled. 00 001: AGC noise threshold = –30dB 00 010: AGC noise threshold = –32dB 00 011: AGC noise threshold = –34dB ... 11 101: AGC noise threshold = –86dB 11 110: AGC noise threshold = –88dB 11 111: AGC noise threshold = –90dB
D0	R/W	0	Reserved. Write only zero to this bit.

Page 0 / Register 88 (0x58): AGC Maximum Gain

BIT	READ/ WRITE	RESET VALUE	DESCRIPTION
D7	R/W	0	Reserved. Write only zero to this bit.
D6–D0	R/W	111 1111	000 0000: AGC maximum gain = 0 dB 000 0001: AGC maximum gain = 0.5 dB 000 0010: AGC maximum gain = 1 dB ... 111 0011: AGC maximum gain = 57.5 dB 111 0100: AGC maximum gain = 58 dB 111 0101: AGC maximum gain = 58.5 dB 111 0110: AGC maximum gain = 59 dB 111 0111: AGC maximum gain = 59.5 dB 111 1000–111 1111: Reserved. Do not write these sequences to these bits.

Copyright © 2009, Texas Instruments Incorporated

Page 0 / Register 89 (0x59): AGC Attack Time

BIT	READ/ WRITE	RESET VALUE	DESCRIPTION
D7–D3	R/W	0000 0	0000 0: AGC attack time = 1 × (32/f_S) where f_S is the ADC sample rate 0000 1: AGC attack time = 3 × (32/f_S) where f_S is the ADC sample rate 0001 0: AGC attack time = 5 × (32/f_S) where f_S is the ADC sample rate 0001 1: AGC attack time = 7 × (32/f_S) where f_S is the ADC sample rate 0010 0: AGC attack time = 9 × (32/f_S) where f_S is the ADC sample rate ... 1111 0: AGC attack time = 61 × (32/f_S) where f_S is the ADC sample rate 1111 1: AGC attack time = 63 × (32/f_S) where f_S is the ADC sample rate
D2–D0	R/W	000	000: Multiply factor for the programmed AGC attack time = 1 001: Multiply factor for the programmed AGC attack time = 2 010: Multiply factor for the programmed AGC attack time = 4 ... 111: Multiply factor for the programmed AGC attack time = 128

Page 0 / Register 90 (0x5A): AGC Decay Time

BIT	READ/ WRITE	RESET VALUE	DESCRIPTION
D7–D3	R/W	0000 0	0000 0: AGC decay time = 1 × (512/f_S) 0000 1: AGC decay time = 3 × (512/f_S) 0001 0: AGC decay time = 5 × (512/f_S) 0001 1: AGC decay time = 7 × (512/f_S) 0010 0: AGC decay time = 9 × (512/f_S) ... 1111 0: AGC decay time = 61 × (512/f_S) 1111 1: AGC decay time = 63 × (512/f_S)
D2–D0	R/W	000	000: Multiply factor for the programmed AGC decay time = 1 001: Multiply factor for the programmed AGC decay time = 2 010: Multiply factor for the programmed AGC decay time = 4 ... 111: Multiply factor for the programmed AGC decay time = 128

Page 0 / Register 91 (0x5B): AGC Noise Debounce

BIT	READ/ WRITE	RESET VALUE	DESCRIPTION
D7–D5	R/W	000	Reserved. Write only zeros to these bits.
D4–D0	R/W	0 0000	0 0000: AGC noise debounce = 0/f_S 0 0001: AGC noise debounce = 4/f_S 0 0010: AGC noise debounce = 8/f_S 0 0011: AGC noise debounce = 16/f_S 0 0100: AGC noise debounce = 32/f_S 0 0101: AGC noise debounce = 64/f_S 0 0110: AGC noise debounce = 128/f_S 0 0111: AGC noise debounce = 256/f_S 0 1000: AGC noise debounce = 512/f_S 0 1001: AGC noise debounce = 1024/f_S 0 1010: AGC noise debounce = 2048/f_S 0 1011: AGC noise debounce = 4096/f_S 0 1100: AGC noise debounce = 2 × 4096/f_S 0 1101: AGC noise debounce = 3 × 4096/f_S 0 1110: AGC noise debounce = 4 × 4096/f_S ... 1 1110: AGC noise debounce = 20 × 4096/f_S 1 1111: AGC noise debounce = 21 × 4096/f_S

Copyright © 2009, Texas Instruments Incorporated

Page0 / Register 92 (0x5C): AGC Signal Debounce

BIT	READ/ WRITE	RESET VALUE	DESCRIPTION
D7–D4	R/W	0000	Reserved. Write only zeros to these bits.
D3–D0	R/W	0000	0000: AGC signal debounce = 0/f_S 0001: AGC signal debounce = 4/f_S 0010: AGC signal debounce = 8/f_S 0011: AGC signal debounce = 16/f_S 0100: AGC signal debounce = 32/f_S 0101: AGC signal debounce = 64/f_S 0110: AGC signal debounce = 128/f_S 0111: AGC signal debounce = 256/f_S 1000: AGC signal debounce = 512/f_S 1001: AGC signal debounce = 1024/f_S 1010: AGC signal debounce = 2048/f_S 1011: AGC signal debounce = 2 × 2048/f_S 1100: AGC signal debounce = 3 × 2048/f_S 1101: AGC signal debounce = 4 × 2048/f_S 1110: AGC signal debounce = 5 × 2048/f_S 1111: AGC signal debounce = 6 × 2048/f_S

Page 0 / Register 93 (0x5D): AGC Gain-Applied Reading

BIT	READ/ WRITE	RESET VALUE	DESCRIPTION
D7–D0	R	XXXX XXXX	1110 1000: Gain applied by AGC = –12 dB 1110 1001: Gain applied by AGC = –11.5 dB ... 0000 0000: Gain applied by AGC = 0 dB ... 0111 0011: Gain applied by AGC = 57.5 dB 0111 0100: Gain applied by AGC = 58 dB 0111 0101: Gain applied by AGC = 58.5 dB 0111 0110: Gain applied by AGC = 59 dB 0111 0111: Gain applied by AGC = 59.5 dB

Page 0 / Registers 94–101: Reserved

BIT	READ/ WRITE	RESET VALUE	DESCRIPTION
D7–D0	R/W	XXXX XXXX	Reserved. Do not write to these registers.

Page 0 / Register 102 (0x66): ADC DC Measurement 1

BIT	READ/ WRITE	RESET VALUE	DESCRIPTION
D7	R/W	0	0: DC measurement is Disabled for mono ADC channel 1: DC measurment is Enabled for mono ADC channel
D6	R/W	0	Reserved. Write only reset value.
D5	R/W	0	0: DC measurement is done based on first-order sinc filter with averaging of 2^D. 1: DC measurment is done based on first-order low-pass IIR filter whose coefficients are calculated based on D value.
D4–D0	R/W	0 0000	DC Meaurement D setting: 00000: Reserved. Don't use. 00001: D = 1 00010: D = 2 ... 10011: D = 19 10100: D = 20 10101 to 11111: Reserved. Don't use.

Copyright © 2009, Texas Instruments Incorporated

Page 0 / Register 103 (0x67): ADC DC Measurement 2

BIT	READ/ WRITE	RESET VALUE	DESCRIPTION
D7	R/W	0	Reserved. Write only reset value.
D6	R/W	0	0: DC measurement data update is enabled. 1: DC measurment data update is disabled. User can read the last updated data without any data corruption.
D5	R/W	0	0: For IIR-based dc measurement, the measurment value is the instantaneous output of the IIR filter 1: For IIR-based dc measurement, the measurment value is update before periodic clearing of the IIR filter
D4–D0	R/W	0 0000	IIR-Based DC Measurment, Average Time Setting: 00000: Infinite average is used 00001: Averaging time is 2^1 ADC modulator clock periods 00010: Averaging time is 2^2 ADC modulator clock periods ... 10011: Averaging time is 2^{19} ADC modulator clock periods 10100: Averaging time is 2^{20} ADC modulator clock periods 10101 to 11111: Reserved. Don't use.

Page 0 / Register 104 (0x67): ADC DC Measurement Output 1

BIT	READ/ WRITE	RESET VALUE	DESCRIPTION
D7–D0	R	0000 0000	ADC DC Measurement Output (23:16)

Page 0 / Register 105 (0x68): ADC DC Measurement Output 2

BIT	READ/ WRITE	RESET VALUE	DESCRIPTION
D7–D0	R	0000 0000	ADC DC Measurement Output (15:8)

Page 0 / Register 106 (0x69): ADC DC Measurement Output 3

BIT	READ/ WRITE	RESET VALUE	DESCRIPTION
D7–D0	R	0000 0000	ADC DC Measurement Output (7:0)

Page 0 / Registers 107–115: Reserved

BIT	READ/ WRITE	RESET VALUE	DESCRIPTION
D7–D0	R/W	XXXX XXXX	Reserved. Do not write to these registers.

Copyright © 2009, Texas Instruments Incorporated

Page 0 / Register 116 (0x74): VOL/MICDET-Pin SAR ADC – Volume Control

BIT	READ/ WRITE	RESET VALUE	DESCRIPTION
D7	R/W	0	0: DAC volume control is controlled by control register. (7-bit Vol ADC is powered down) 1: DAC volume control is controlled by pin.
D6	R/W	0	0: Internal on-chip RC oscillator is used for the 7-bit Vol ADC for pin volume control. 1: MCLK is used for the 7-bit Vol ADC for pin volume control.
D5–D4	R/W	00	00: No hysteresis for volume control ADC output 01: Hysteresis of ±1 bit 10: Hysteresis of ±2 bits 11: Reserved. Do not write this sequence to these bits.
D3	R/W	0	Reserved. Write only reset value.
D2–D0	R/W	000	Throughput of the 7-bit Vol ADC for pin volume control, frequency based on MCLK or internal oscillator.

	MCLK = 12 MHz	Internal Oscillator Source
000: Throughput =	15.625 Hz	10.68 Hz
001: Throughput =	31.25 Hz	21.35 Hz
010: Throughput =	62.5 Hz	42.71 Hz
011: Throughput =	125 Hz	8.2 Hz
100: Throughput =	250 Hz	170 Hz
101: Throughput =	500 Hz	340 Hz
110: Throughput =	1 kHz	680 Hz
111: Throughput =	2 kHz	1.37 kHz
		Note: These values are based on a nominal oscillator frequency of 8.2 MHz. Values will scale to the actual oscillator frequency.

Page 0 / Register 117 (0x75): VOL/MICDET-Pin Gain

BIT	READ/ WRITE	RESET VALUE	DESCRIPTION
D7	R/W	0	Reserved. Write only zero to this bit.
D6–D0	R	XXX XXXX	000 0000: Gain applied by pin volume control = 18 dB 000 0001: Gain applied by pin volume control = 17.5 dB 000 0010: Gain applied by pin volume control = 17 dB ... 010 0011: Gain applied by pin volume control = 0.5 dB 010 0100: Gain applied by pin volume control = 0 dB 010 0101: Gain applied by pin volume control = –0.5 dB ... 101 1001: Gain applied by pin volume control = –26.5 dB 101 1010: Gain applied by pin volume control = –27 dB 101 1011: Gain applied by pin volume control = –28 dB ... 111 1101: Gain applied by pin volume control = –62 dB 111 1110: Gain applied by pin volume control = –63 dB 111 1111: Reserved.

Page 0 / Registers 118 to 127: Reserved

BIT	READ/ WRITE	RESET VALUE	DESCRIPTION
D7–D0	R/W	XXXX XXXX	Reserved. Do not write to these registers.

6.3 Control Registers, Page 1: DAC and ADC Routing, PGA, Power-Controls and MISC Logic Related Programmabilities

Page 1 / Register 0 (0x00): Page Control Register

BIT	READ/ WRITE	RESET VALUE	DESCRIPTION
D7–D0	R/W	0000 0000	0000 0000: Page 0 selected 0000 0001: Page 1 selected ... 1111 1110: Page 254 selected 1111 1111: Page 255 selected

Copyright © 2009, Texas Instruments Incorporated

Page 1 / Registers 1–29: Reserved

BIT	READ/ WRITE	RESET VALUE	DESCRIPTION
D7–D0	R/W	XXXX XXXX	Reserved. Do not write to these registers.

Page 1 / Register 30 (0x1E): Headphone and Speaker Amplifier Error Control

BIT	READ/ WRITE	RESET VALUE	DESCRIPTION
D7–D2	R/W	0000 00	Reserved
D1	R/W	0	0: Reset HPL and HPR power-up control bits on short-circuit detection if page 1, register 31, D1 = 1. 1: HPL and HPR power-up control bits remain unchanged on short-circuit detection.
D0	R/W	0	0: Reset SPL and SPR power-up control bits on short-circuit detection. 1: SPL and SPR power-up control bits remain unchanged on short-circuit detection.

Page 1 / Register 31 (0x1F): Headphone Drivers

BIT	READ/ WRITE	RESET VALUE	DESCRIPTION
D7	R/W	0	0: HPL output driver is powered down. 1: HPL output driver is powered up.
D6	R/W	0	0: HPR output driver is powered down. 1: HPR output driver is powered up.
D5	R/W	0	Reserved. Write only zero to this bit.
D4–D3	R/W	00	00: Output common-mode voltage = 1.35 V 01: Output common-mode voltage = 1.5 V 10: Output common-mode voltage = 1.65 V 11: Output common-mode voltage = 1.8 V
D2	R/W	1	Reserved. Write only 1 to this bit.
D1	R/W	0	0: If short-circuit protection is enabled for headphone driver and short circuit detected, device limits the maximum current to the load. 1: If short-circuit protection is enabled for headphone driver and short circuit detected, device powers down the output driver.
D0	R	0	0: Short circuit is not detected on the headphone driver. 1: Short circuit is detected on the headphone driver.

Page 1 / Register 32 (0x20): Class-D Speaker Amplifier

BIT	READ/ WRITE	RESET VALUE	DESCRIPTION
D7	R/W	0	0: Left-channel class-D output driver is powered down. 1: Left-channel class-D output driver is powered up.
D6	R/W	0	0: Right-channel class-D output driver is powered down. 1: Right-channel class-D output driver is powered up.
D5–D1	R/W	00 011	Reserved. Write only the reset value to this bit.
D0	R	0	0: Short circuit is not detected on the class-D driver. Valid only if class-D amplifier is powered up. For short-circuit flag sticky bit, see page 0 / register 44. 1: Short circuit is detected on the class-D driver. Valid only if class-D amp is powered-up. For short-circuit flag sticky bit, see page 0 / register 44.

Copyright © 2009, Texas Instruments Incorporated

Page 1 / Register 33 (0x21): HP Output Drivers POP Removal Settings

BIT	READ/ WRITE	RESET VALUE	DESCRIPTION
D7	R/W	0	0: If power-down sequence is activated by device software power down using page 1 / register 46, bit D7, then power down the DAC simultaneously with the HP and SP amplifiers. 1: If power-down sequence is activated by device software power down using page 1 / register 46, bit D7, then power down DAC only after HP and SP amplifiers are completely powered down. This is to optimize power-down POP.
D6–D3	R/W	0111	0000: Driver power-on time = 0 µs 0001: Driver power-on time = 15.3 µs 0010: Driver power-on time = 153 µs 0011: Driver power-on time = 1.53 ms 0100: Driver power-on time = 15.3 ms 0101: Driver power-on time = 76.2 ms 0110: Driver power-on time = 153 ms 0111: Driver power-on time = 304 ms 1000: Driver power-on time = 610ms 1001: Driver power-on time = 1.22 s 1010: Driver power-on time = 3.04 s 1011: Driver power-on time = 6.1 s 1100–1111: Reserved. Do not write these sequences to these bits. NOTE: These values are based on typical oscillator frequency of 8.2 MHz. Scale according to the actual oscillator frequency.
D2–D1	R/W	11	00: Driver ramp-up step time = 0 ms 01: Driver ramp-up step time = 0.98 ms 10: Driver ramp-up step time = 1.95 ms 11: Driver ramp-up step time = 3.9 ms NOTE: These values are based on typical oscillator frequency of 8.2 MHz. Scale according to the actual oscillator frequency.
D0	R/W	0	0: Weakly driven output common-mode voltage is generated from resistor divider of the AVDD supply. 1: Weakly driven output common-mode voltage is generated from band-gap reference.

Page 1 / Register 34 (0x22): Output Driver PGA Ramp-Down Period Control

BIT	READ/ WRITE	RESET VALUE	DESCRIPTION
D7	R/W	0	Reserved. Write only the reset value to this bit.
D6–D4	R/W	000	Speaker Power-Up Wait Time (Duration Based on Using Internal Oscillator) 000: Wait time = 0 ms 001: Wait time = 3.04 ms 010: Wait time = 7.62 ms 011: Wait time = 12.2 ms 100: Wait time = 15.3 ms 101: Wait time = 19.8 ms 110: Wait time = 24.4 ms 111: Wait time = 30.5 ms NOTE: These values are based on typical oscillator frequency of 8.2 MHz. Scale according to the actual oscillator frequency.
D3–D0	R/W	0000	Reserved. Write only the reset value to these bits.

Copyright © 2009, Texas Instruments Incorporated

Page 1 / Register 35 (0x23): DAC_L and DAC_R Output Mixer Routing

BIT	READ/ WRITE	RESET VALUE	DESCRIPTION
D7–D6	R/W	00	00: DAC_L is not routed anywhere. 01: DAC_L is routed to the left-channel mixer amplifier. 10: DAC_L is routed directly to the HPL driver. 11: Reserved
D5	R/W	0	0: MIC1LP input is not routed to the left-channel mixer amplifier. 1: MIC1LP input is routed to the left-channel mixer amplifier.
D4		0	0: MIC1RP input is not routed to the left-channel mixer amplifier. 1: MIC1RP input is routed to the left-channel mixer amplifier.
D3–D2	R/W	00	00: DAC_R is not routed anywhere. 01: DAC_R is routed to the right-channel mixer amplifier. 10: DAC_R is routed directly to the HPR driver. 11: Reserved
D1	R/W	0	0: MIC1RP input is not routed to the right-channel mixer amplifier. 1: MIC1RP input is routed to the right-channel mixer amplifier.
D0	R/W	0	0: HPL driver output is not routed to the HPR driver. 1: HPL driver output is routed to the HPR driver input (used for differential output mode).

Page 1 / Register 36 (0x24): Left Analog Vol to HPL

BIT	READ/ WRITE	RESET VALUE	DESCRIPTION
D7	R/W	0	0: Left-channel analog volume to left-channel headphone output driver is muted if bits D6–D0 are also 111 1111. 1: Left-channel analog volume control is routed to HPL output driver.
D6–D0	R/W	111 1111	Left-channel analog volume control gain (non-linear) for the HPL output driver, 0 dB to –78 dB. See Table 5-37 and Table 5-38.

Page 1 / Register 37 (0x25): Right Analog Vol to HPR

BIT	READ/ WRITE	RESET VALUE	DESCRIPTION
D7	R/W	0	0: Right-channel analog volume to right-channel headphone output driver is muted if bits D6–D0 are also 111 1111. 1: Right-channel analog volume control is routed to HPR output driver.
D6–D0	R/W	111 1111	Right-channel analog volume control gain (non-linear) for the HPR output driver, 0 dB to –78 dB. See Table 5-37 and Table 5-38.

Page 1 / Register 38 (0x26): Left Analog Vol to SPL

BIT	READ/ WRITE	RESET VALUE	DESCRIPTION
D7	R/W	0	0: Left-channel analog volume to left-channel class-D output driver is muted if bits D6–D0 are also 111 1111. 1: Left-channel analog volume control output is routed to left-channel class-D output driver.
D6–D0	R/W	111 1111	Left-channel analog volume control output gain (non-linear) for the left-channel class-D output driver, 0 dB to –78 dB. See Table 5-37 and Table 5-38.

Page 1 / Register 39 (0x27): Right Analog Vol to SPR

BIT	READ/ WRITE	RESET VALUE	DESCRIPTION
D7	R/W	0	0: Right-channel analog volume to right-channel class-D output driver is muted if bits D6–D0 are also 111 1111. 1: Right-channel analog volume control output is routed to right-channel class-D output driver.
D6–D0	R/W	111 1111	Right-channel analog volume control output gain (non-linear) for the right-channel class-D output driver, 0 dB to –78 dB. See Table 5-37 and Table 5-38.

Copyright © 2009, Texas Instruments Incorporated

Page 1 / Register 40 (0x28): HPL Driver

BIT	READ/ WRITE	RESET VALUE	DESCRIPTION
D7	R/W	0	Reserved. Write only zero to this bit.
D6–D3	R/W	0000	0000: HPL driver PGA = 0 dB 0001: HPL driver PGA = 1 dB 0010: HPL driver PGA = 2 dB ... 1000: HPL driver PGA = 8 dB 1001: HPL driver PGA = 9 dB 1010–1111: Reserved. Do not write these sequences to these bits.
D2	R/W	0	0: HPL driver is muted. 1: HPL driver is not muted.
D1	R/W	1	0: HPL driver is weakly driven to a common mode during power down. 1: HPL driver is high-impedance during power down.
D0	R	0	0: Not all programmed gains to HPL have been applied yet. 1: All programmed gains to HPL have been applied.

Page 1 / Register 41 (0x29): HPR Driver

BIT	READ/ WRITE	RESET VALUE	DESCRIPTION
D7	R/W	0	Reserved. Write only zero to this bit.
D6–D3	R/W	0000	0000: HPR driver PGA = 0 dB 0001: HPR driver PGA = 1 dB 0010: HPR driver PGA = 2 dB ... 1000: HPR driver PGA = 8 dB 1001: HPR driver PGA = 9 dB 1010–1111: Reserved. Do not write these sequences to these bits.
D2	R/W	0	0: HPR driver is muted. 1: HPR driver is not muted.
D1	R/W	1	0: HPR driver is weakly driven to a common mode during power down. 1: HPR driver is high-impedance during power down.
D0	R	0	0: Not all programmed gains to HPR have been applied yet. 1: All programmed gains to HPR have been applied.

Page 1 / Register 42 (0x2A): SPL Driver

BIT	READ/ WRITE	RESET VALUE	DESCRIPTION
D7–D5	R/W	000	Reserved. Write only zeros to these bits.
D4–D3	R/W	00	00: Left-channel class-D driver output stage gain = 6 dB 01: Left-channel class-D driver output stage gain = 12 dB 10: Left-channel class-D driver output stage gain = 18 dB 11: Left-channel class-D driver output stage gain = 24 dB
D2	R/W	0	0: Left-channel class-D driver is muted. 1: Left-channel class-D driver is not muted.
D1	R/W	0	Reserved. Write only zero to this bit.
D0	R	0	0: Not all programmed gains to left-channel class-D driver have been applied yet. 1: All programmed gains to left-channel class-D driver have been applied.

Copyright © 2009, Texas Instruments Incorporated

Page 1 / Register 43 (0x2B): SPR Driver

BIT	READ/ WRITE	RESET VALUE	DESCRIPTION
D7–D5	R/W	000	Reserved. Write only zeros to these bits.
D4–D3	R/W	00	00: Right-channel class-D driver output stage gain = 6 dB 01: Right-channel class-D driver output stage gain = 12 dB 10: Right-channel class-D driver output stage gain = 18 dB 11: Right-channel class-D driver output stage gain = 24 dB
D2	R/W	0	0: Right-channel class-D driver is muted. 1: Right-channel class-D driver is not muted.
D1	R/W	0	Reserved. Write only zero to this bit.
D0	R	0	0: Not all programmed gains to right-channel class-D driver have been applied yet. 1: All programmed gains to right-channel class-D driver have been applied.

Page 1 / Register 44 (0x2C): HP Driver Control

BIT	READ/ WRITE	RESET VALUE	DESCRIPTION		
D7–D5	R/W	000	Debounce time for the headset short-circuit detection		
			(1)	**MCLK/DIV (Page 3 / register 16) = 1-MHz Source**	**Internal Oscillator Source**
			000: Debounce time = 001: Debounce time = 010: Debounce time = 011: Debounce time = 100: Debounce time = 101: Debounce time = 110: Debounce time = 111: Debounce time =	0 µs 8 µs 16 µs 32 µs 64 µs 128 µs 256 µs 512 µs	0 µs 7.8 µs 15.6 µs 31.2 µs 62.4 µs 124.9 µs 250 µs 500 µs Note: These values are based on a nominal oscillator frequency of 8.2 MHz. Values will scale to the actual oscillator frequency.
D4–D3	R/W	00	00: Default mode for the DAC 01: DAC performance increased by increasing the current 10: Reserved 11: DAC performance increased further by increasing the current again		
D2	R/W	0	0: HPL output driver is programmed as headphone driver. 1: HPL output driver is programmed as lineout driver.		
D1	R/W	0	0: HPR output driver is programmed as headphone driver. 1: HPRoutput driver is programmed as lineout driver.		
D0	R/W	0	Reserved. Write only zero to this bit.		

(1) The clock used for the debounce has a clock period = debounce duration/8.

Page 1 / Register 45 (0x2D): Reserved

BIT	READ/ WRITE	RESET VALUE	DESCRIPTION
D7–D0	R/W	XXXX XXXX	Reserved. Do not write to these registers.

Page 1 / Register 46 (0x2E): MICBIAS

BIT	READ/ WRITE	RESET VALUE	DESCRIPTION
D7	R/W	0	0: Device software power down is not enabled. 1: Device software power down is enabled.
D6–D4	R/W	000	Reserved. Write only zeros to these bits.
D3	R/W	0	0: Programmed MICBIAS is not powered up if headset detection is enabled but headset is not inserted. 1: Programmed MICBIAS is powered up even if headset is not inserted.
D2	R/W	0	Reserved. Write only zero to this bit.
D1–D0	R/W	00	00: MICBIAS output is powered down. 01: MICBIAS output is powered to 2 V. 10: MICBIAS output is powered to 2.5 V. 11: MICBIAS output is powered to AVDD.

Copyright © 2009, Texas Instruments Incorporated

Page 1 / Register 47 (0x2F): MIC PGA

BIT	READ/ WRITE	RESET VALUE	DESCRIPTION
D7	R/W	1	0: MIC PGA is controlled by bits D6–D0. 1: MIC PGA is at 0 dB.
D6–D0	R/W	000 0000	000 0000: PGA = 0 dB 000 0001: PGA = 0.5 dB 000 0010: PGA = 1 dB ... 111 0110: PGA = 59 dB 111 0111: PGA = 59.5 dB 111 1000–111 1111: Reserved. Do not write these sequences to these bits.

Page 1 / Register 48 (0x30): Delta-Sigma Mono ADC Channel Fine-Gain Input Selection for P-Terminal

BIT	READ/ WRITE	RESET VALUE	DESCRIPTION
D7–D6 (1) (2)	R/W	00	00: MIC1LP is not selected for the MIC PGA. 01: MIC1LP is selected for the MIC PGA with feed-forward resistance RIN = 10 kΩ. 10: MIC1LP is selected for the MIC PGA with feed-forward resistance RIN = 20 kΩ. 11: MIC1LP is selected for the MIC PGA with feed-forward resistance RIN = 40 kΩ.
D5–D4	R/W	00	00: MIC1RP is not selected for the MIC PGA. 01: MIC1RP is selected for the MIC PGA with feed-forward resistance RIN = 10 kΩ 10: MIC1RP is selected for the MIC PGA with feed-forward resistance RIN = 20 kΩ 11: MIC1RP is selected for the MIC PGA with feed-forward resistance RIN = 40 kΩ
D3–D2	R/W	00	00: MIC1LM is not selected for the MIC PGA. 01: MIC1LM is selected for the MIC PGA with feed-forward resistance RIN = 10 kΩ 10: MIC1LM is selected for the MIC PGA with feed-forward resistance RIN = 20 kΩ 11: MIC1LM is selected for the MIC PGA with feed-forward resistance RIN = 40 kΩ
D1–D0	R/W	00	Reserved. Write only zeros to these bits.

(1) Program D7–D6 of registers 48 and 49 with same value.
(2) Input impedance selection affects the microphone PGA gain. See the Analog Front End section for details.

Page 1 / Register 49 (0x31): ADC Input Selection for M-Terminal

BIT	READ/ WRITE	RESET VALUE	DESCRIPTION
D7–D6 (1) (2)	R/W	00	00: CM is not selected for the MIC PGA. 01: CM is selected for the MIC PGA with feed-forward resistance RIN = 10 kΩ. 10: CM is selected for the MIC PGA with feed-forward resistance RIN = 20 kΩ. 11: CM is selected for the MIC PGA with feed-forward resistance RIN = 40 kΩ.
D5–D4		00	00: MIC1LM is not selected for the MIC PGA. 01: MIC1LM is selected for the MIC PGA with feed-forward resistance RIN = 10 kΩ. 10: MIC1LM is selected for the MIC PGA with feed-forward resistance RIN = 20 kΩ. 11: MIC1LM is selected for the MIC PGA with feed-forward resistance RIN = 40 kΩ.
D3–D0	R/W	0000	Reserved. Write only zeros to these bits.

(1) Program D7–D6 of registers 48 and 49 with same value.
(2) Input impedance selection affects the microphone PGA gain. See the Analog Front End section for details.

Page 1 / Register 50 (0x32): Input CM Settings

BIT	READ/ WRITE	RESET VALUE	DESCRIPTION
D7	R/W	0	0: MIC1LP input is floating, if it is not used for the MIC PGA and analog bypass. 1: MIC1LP input is connected to CM internally, if it is not used for the MIC PGA and analog bypass.
D6	R/W	0	0: MIC1RP input is floating, if it is not used for the MIC PGA and analog bypass. 1: MIC1RP input is connected to CM internally, if it is not used for the MIC PGA and analog bypass.
D5	R/W	0	0: MIC1LM input is floating, if it is not used for the MIC PGA. 1: MIC1LM input is connected to CM internally, if it is not used for the MIC PGA.
D4–D1	R/W	0000	Reserved. Write only zeros to these bits.
D0	R	0	0: Not all programmed analog gains to the ADC have been applied yet. 1: All programmed analog gains to the ADC have been applied.

Copyright © 2009, Texas Instruments Incorporated

Page 1 / Registers 51–127: Reserved

BIT	READ/ WRITE	RESET VALUE	DESCRIPTION
D7–D0	R/W	XXXX XXXX	Reserved. Write only the reset value to these bits.

6.4 Control Registers, Page 3: MCLK Divider for Programmable Delay Timer

Default values shown for this page only become valid 100 µs following a hardware or software reset.

Table 6-3. Page 3 / Register 0 (0x00): Page Control Register

BIT	READ/ WRITE	RESET VALUE	DESCRIPTION
D7–D0	R/W	0000 0000	0000 0000: Page 0 selected 0000 0001: Page 1 selected ... 1111 1110: Page 254 selected 1111 1111: Page 255 selected

The only register used in page 3 is register 16. The remaining page 3 registers are reserved and should not be written to.

Table 6-4. Page 3 / Register 16 (0x10): Timer Clock MCLK Divider

BIT	READ/ WRITE	RESET VALUE	DESCRIPTION
D7	R/W	1	0: Internal oscillator is used for programmable delay timer. 1: External MCLK(1) is used for programmable delay timer.
D6–D0	R/W	000 0001	MCLK Divider to Generate 1-MHz Clock for the Programmable Delay Timer 000 0000: MCLK divider = 128 000 0001: MCLK divider = 1 000 0010: MCLK divider = 2 ... 111 1110: MCLK divider = 126 111 1111: MCLK divider = 127

(1) External clock is used only to control the delay programmed between the conversions and not used for doing the actual conversion. This feature is provided in case a more-accurate delay is desired, because the internal oscillator frequency varies from device to device.

6.5 Control Registers, Page 4: ADC Digital Filter Coefficients

Default values shown for this page only become valid 100 µs following a hardware or software reset.

Page 4 / Register 0 (0x00): Page Control Register

BIT	READ/ WRITE	RESET VALUE	DESCRIPTION
D7–D0	R/W	0000 0000	0000 0000: Page 0 selected 0000 0001: Page 1 selected ... 1111 1110: Page 254 selected 1111 1111: Page 255 selected

The remaining page-4 registers are either reserved registers or are used for setting coefficients for the various filters in the TLV320AIC3110. Reserved registers should not be written to.

The filter coefficient registers are arranged in pairs, with two adjacent 8-bit registers containing the 16-bit coefficient for a single filter. The 16-bit integer contained in the MSB and LSB registers for a coefficient are interpreted as a 2s-complement integer, with possible values ranging from –32,768 to 32,767. When programming any coefficient value for a filter, the MSB register should always be written first, immediately followed by the LSB register. Even if only the MSB or LSB portion of the coefficient changes, both registers should be written in this sequence. Table 6-5 is a list of the page-4 registers, excepting the previously described register 0.

Copyright © 2009, Texas Instruments Incorporated

Table 6-5. Page 4 Registers

REGISTER NUMBER	RESET VALUE	REGISTER NAME
1 (0x01)	XXXX XXXX	Reserved. Do not write to this register.
2 (0x02)	0000 0001	8 MSBs of N0 coefficient for AGC LPF (first-order IIR) used as averager to detect level
3 (0x03)	0001 0111	8 LSBs of N0 coefficient for AGC LPF (first-order IIR) used as averager to detect level
4 (0x04)	0000 0001	8 MSBs of N1 coefficient for AGC LPF (first-order IIR) used as averager to detect level
5 (0x05)	0001 0111	8 LSBs of N1 coefficient for AGC LPF (first-order IIR) used as averager to detect level
6 (0x06)	0111 1101	8 MSBs of D1 coefficient for AGC LPF (first-order IIR) used as averager to detect level
7 (0x07)	1101 0011	8 LSBs of D1 coefficient for AGC LPF (first-order IIR) used as averager to detect level
8 (0x08)	0111 1111	8 MSBs of N0 coefficient for ADC-programmable first-order IIR
9 (0x09)	1111 1111	8 LSBs of N0 coefficient for ADC-programmable first-order IIR
10 (0x0A)	0000 0000	8 MSBs of N1 coefficient for ADC-programmable first-order IIR
11 (0x0B)	0000 0000	8 LSBs of N1 coefficient for ADC-programmable first-order IIR
12 (0x0C)	0000 0000	8 MSBs of D1 coefficient for ADC-programmable first-order IIR
13 (0x0D)	0000 0000	8 LSBs of D1 coefficient for ADC-programmable first-order IIR
14 (0x0E)	0111 1111	Coefficient N0(15:8) for ADC biquad A or coefficient FIR0(15:8) for ADC FIR filter
15 (0x0F)	1111 1111	Coefficient N0(7:0) for ADC biquad A or coefficient FIR0(7:0) for ADC FIR filter
16 (0x10)	0000 0000	Coefficient N1(15:8) for ADC biquad A or coefficient FIR1(15:8) for ADC FIR filter
17 (0x11)	0000 0000	Coefficient N1(7:0) for ADC biquad A or coefficient FIR1(7:0) for ADC FIR filter
18 (0x12)	0000 0000	Coefficient N2(15:8) for ADC biquad A or coefficient FIR2(15:8) for ADC FIR filter
19 (0x13)	0000 0000	Coefficient N2(7:0) for ADC biquad A or coefficient FIR2(7:0) for ADC FIR filter
20 (0x14)	0000 0000	Coefficient D1(15:8) for ADC biquad A or coefficient FIR3(15:8) for ADC FIR filter
21 (0x15)	0000 0000	Coefficient D1(7:0) for ADC biquad A or coefficient FIR3(7:0) for ADC FIR filter
22 (0x16)	0000 0000	Coefficient D2(15:8) for ADC biquad A or coefficient FIR4(15:8) for ADC FIR filter
23 (0x17)	0000 0000	Coefficient D2(7:0) for ADC biquad A or coefficient FIR4(7:0) for ADC FIR filter
24 (0x18)	0111 1111	Coefficient N0(15:8) for ADC biquad B or coefficient FIR5(15:8) for ADC FIR filter
25 (0x19)	1111 1111	Coefficient N0(7:0) for ADC biquad B or coefficient FIR5(7:0) for ADC FIR filter
26 (0x1A)	0000 0000	Coefficient N1(15:8) for ADC biquad B or coefficient FIR6(15:8) for ADC FIR filter
27 (0x1B)	0000 0000	Coefficient N1(7:0) for ADC biquad B or coefficient FIR6(7:0) for ADC FIR filter
28 (0x1C)	0000 0000	Coefficient N2(15:8) for ADC biquad B or coefficient FIR7(15:8) for ADC FIR filter
29 (0x1D)	0000 0000	Coefficient N2(7:0) for ADC biquad B or coefficient FIR7(7:0) for ADC FIR filter
30 (0x1E)	0000 0000	Coefficient D1(15:8) for ADC biquad B or coefficient FIR8(15:8) for ADC FIR filter
31 (0x1F)	0000 0000	Coefficient D1(7:0) for ADC biquad B or coefficient FIR8(7:0) for ADC FIR filter
32 (0x20)	0000 0000	Coefficient D2(15:8) for ADC biquad B or coefficient FIR9(15:8) for ADC FIR filter
33 (0x21)	0000 0000	Coefficient D2(7:0) for ADC biquad B or coefficient FIR9(7:0) for ADC FIR filter
34 (0x22)	0111 1111	Coefficient N0(15:8) for ADC biquad C or coefficient FIR10(15:8) for ADC FIR filter
35 (0x23)	1111 1111	Coefficient N0(7:0) for ADC biquad C or coefficient FIR10(7:0) for ADC FIR filter
36 (0x24)	0000 0000	Coefficient N1(15:8) for ADC biquad C or coefficient FIR11(15:8) for ADC FIR filter
37 (0x25)	0000 0000	Coefficient N1(7:0) for ADC biquad C or coefficient FIR11(7:0) for ADC FIR filter
38 (0x26)	0000 0000	Coefficient N2(15:8) for ADC biquad C or coefficient FIR12(15:8) for ADC FIR filter
39 (0x27)	0000 0000	Coefficient N2(7:0) for ADC biquad C or coefficient FIR12(7:0) for ADC FIR filter
40 (0x28)	0000 0000	Coefficient D1(15:8) for ADC biquad C or coefficient FIR13(15:8) for ADC FIR filter
41 (0x29)	0000 0000	Coefficient D1(7:0) for ADC biquad C or coefficient FIR13(7:0) for ADC FIR filter
42 (0x2A)	0000 0000	Coefficient D2(15:8) for ADC biquad C or coefficient FIR14(15:8) for ADC FIR filter
43 (0x2B)	0000 0000	Coefficient D2(7:0) for ADC biquad C or coefficient FIR14(7:0) for ADC FIR filter
44 (0x2C)	0111 1111	Coefficient N0(15:8) for ADC biquad D or coefficient FIR15(15:8) for ADC FIR filter
45 (0x2D)	1111 1111	Coefficient N0(7:0) for ADC biquad D or coefficient FIR15(7:0) for ADC FIR filter
46 (0x2E)	0000 0000	Coefficient N1(15:8) for ADC biquad D or coefficient FIR16(15:8) for ADC FIR filter

Copyright © 2009, Texas Instruments Incorporated

Page 4 Registers (continued)

REGISTER NUMBER	RESET VALUE	REGISTER NAME
47 (0x2F)	0000 0000	Coefficient N1(7:0) for ADC biquad D or coefficient FIR16(7:0) for ADC FIR filter
48 (0x30)	0000 0000	Coefficient N2(15:8) for ADC biquad D or coefficient FIR17(15:8) for ADC FIR filter
49 (0x31)	0000 0000	Coefficient N2(7:0) for ADC biquad D or coefficient FIR17(7:0) for ADC FIR filter
50 (0x32)	0000 0000	Coefficient D1(15:8) for ADC biquad D or coefficient FIR18(15:8) for ADC FIR filter
51 (0x33)	0000 0000	Coefficient D1(7:0) for ADC biquad D or coefficient FIR18(7:0) for ADC FIR filter
52 (0x34)	0000 0000	Coefficient D2(15:8) for ADC biquad D or coefficient FIR19(15:8) for ADC FIR filter
53 (0x35)	0000 0000	Coefficient D2(7:0) for ADC biquad D or coefficient FIR19(7:0) for ADC FIR filter
54 (0x36)	0111 1111	Coefficient N0(15:8) for ADC biquad E or coefficient FIR20(15:8) for ADC FIR filter
55 (0x37)	1111 1111	Coefficient N0(7:0) for ADC biquad E or coefficient FIR20(7:0) for ADC FIR filter
56 (0x38)	0000 0000	Coefficient N1(15:8) for ADC biquad E or coefficient FIR21(15:8) for ADC FIR filter
57 (0x39)	0000 0000	Coefficient N1(7:0) for ADC biquad E or coefficient FIR21(7:0) for ADC FIR filter
58 (0x3A)	0000 0000	Coefficient N2(15:8) for ADC biquad E or coefficient FIR22(15:8) for ADC FIR filter
59 (0x3B)	0000 0000	Coefficient N2(7:0) for ADC biquad E or coefficient FIR22(7:0) for ADC FIR filter
60 (0x3C)	0000 0000	Coefficient D1(15:8) for ADC biquad E or coefficient FIR23(15:8) for ADC FIR filter
61 (0x3D)	0000 0000	Coefficient D1(7:0) for ADC biquad E or coefficient FIR23(7:0) for ADC FIR filter
62 (0x3E)	0000 0000	Coefficient D2(15:8) for ADC biquad E or coefficient FIR24(15:8) for ADC FIR filter
63 (0x3F)	0000 0000	Coefficient D2(7:0) for ADC biquad E or coefficient FIR24(7:0) for ADC FIR filter
64-127	0000 0000	Reserved. Write only reset values.

6.6 Control Registers, Page 8: DAC Digital Filter Coefficients

Default values shown for this page only become valid 100 µs following a hardware or software reset.

Page 8 / Register 0 (0x00) : Page Control Register

BIT	READ/ WRITE	RESET VALUE	DESCRIPTION
D7–D0	R/W	0000 0000	0000 0000: Page 0 selected 0000 0001: Page 1 selected ... 1111 1110: Page 254 selected 1111 1111: Page 255 selected

The remaining page-8 registers are either reserved registers or are used for setting coefficients for the various filters in the TLV320AIC3110. Reserved registers should not be written to.

The filter coefficient registers are arranged in pairs, with two adjacent 8-bit registers containing the 16-bit coefficient for a single filter. The 16-bit integer contained in the MSB and LSB registers for a coefficient are interpreted as a 2s-complement integer, with possible values ranging from –32,768 to 32,767. When programming any coefficient value for a filter, the MSB register should always be written first, immediately followed by the LSB register. Even if only the MSB or LSB portion of the coefficient changes, both registers should be written in this sequence. Table 6-6 is a list of the page-8 registers, excepting the previously described register 0.

Copyright © 2009, Texas Instruments Incorporated

Page 8 / Register 1 (0x01) : DAC Coefficient Buffer Control

BIT	READ/ WRITE	RESET VALUE	DESCRIPTION
D7–D4	R/W	0000	Reserved. Write only the reset value.
D3	R	0	DAC PRB generated flag for toggling MSB of coefficient RAM address (only used in non-adaptive mode)
D2	R/W	0	DAC Adaptive Filtering Control 0: Adaptive filtering disabled in DAC Processing Blocks 1: Adaptive filtering enabled in DAC Processing Blocks
D1	R	0	DAC Adaptive Filter Buffer Control Flag 0: In adaptive filter mode, DAC Processing Blocks accesses DAC coefficient Buffer A and the external control interface accesses DAC coefficient Buffer B 1: In adaptive filter mode, DAC Processing Blocks accesses DAC coefficient Buffer B and the external control interface accesses DAC coefficient Buffer A
D0	R/W	0	DAC Adaptive Filter Buffer Switch Control 0: DAC coefficient buffers will not be switched at the next frame boundary 1: DAC coefficient buffers will be switched at the next frame boundary, if adaptive filtering mode is enabled. This bit will self-clear on switching.

Table 6-6. Page 8 DAC Buffer A Registers

REGISTER NUMBER	RESET VALUE	REGISTER NAME
2 (0x02)	0111 1111	8 MSBs of n0 coefficient for left DAC-programmable biquad A
3 (0x03)	1111 1111	8 LSBs of n0 coefficient for left DAC-programmable biquad A
4 (0x04)	0000 0000	8 MSBs of n1 coefficient for left DAC-programmable biquad A
5 (0x05)	0000 0000	8 LSBs of n1 coefficient for left DAC-programmable biquad A
6 (0x06)	0000 0000	8 MSBs of n2 coefficient for left DAC-programmable biquad A
7 (0x07)	0000 0000	8 LSBs of n2 coefficient for left DAC-programmable biquad A
8 (0x08)	0000 0000	8 MSBs of d1 coefficient for left DAC-programmable biquad A
9 (0x09)	0000 0000	8 LSBs of d1 coefficient for left DAC-programmable biquad A
10 (0x0A)	0000 0000	8 MSBs of d2 coefficient for left DAC-programmable biquad A
11 (0x0B)	0000 0000	8 LSBs of d2 coefficient for left DAC-programmable biquad A
12 (0x0C)	0111 1111	8 MSBs of n0 coefficient for left DAC-programmable biquad B
13 (0x0D)	1111 1111	8 LSBs of n0 coefficient for left DAC-programmable biquad B
14 (0x0E)	0000 0000	8 MSBs of n1 coefficient for left DAC-programmable biquad B
15 (0x0F)	0000 0000	8 LSBs of n1 coefficient for left DAC-programmable biquad B
16 (0x10)	0000 0000	8 MSBs of n2 coefficient for left DAC-programmable biquad B
17 (0x11)	0000 0000	8 LSBs of n2 coefficient for left DAC-programmable biquad B
18 (0x12)	0000 0000	8 MSBs of d1 coefficient for left DAC-programmable biquad B
19 (0x13)	0000 0000	8 LSBs of d1 coefficient for left DAC-programmable biquad B
20 (0x14)	0000 0000	8 MSBs of d2 coefficient for left DAC-programmable biquad B
21 (0x15)	0000 0000	8 LSBs of d2 coefficient for left DAC-programmable biquad B
22 (0x16)	0111 1111	8 MSBs of n0 coefficient for left DAC-programmable biquad C
23 (0x17)	1111 1111	8 LSBs of n0 coefficient for left DAC-programmable biquad C
24 (0x18)	0000 0000	8 MSBs of n1 coefficient for left DAC-programmable biquad C
25 (0x19)	0000 0000	8 LSBs of n1 coefficient for left DAC-programmable biquad C
26 (0x1A)	0000 0000	8 MSBs of n2 coefficient for left DAC-programmable biquad C
27 (0x1B)	0000 0000	8 LSBs of n2 coefficient for left DAC-programmable biquad C
28 (0x1C)	0000 0000	8 MSBs of d1 coefficient for left DAC-programmable biquad C
29 (0x1D)	0000 0000	8 LSBs of d1 coefficient for left DAC-programmable biquad C
30 (0x1E)	0000 0000	8 MSBs of d2 coefficient for left DAC-programmable biquad C
31 (0x1F)	0000 0000	8 LSBs of d2 coefficient for left DAC-programmable biquad C
32 (0x20)	0111 1111	8 MSBs of n0 coefficient for left DAC-programmable biquad D

Copyright © 2009, Texas Instruments Incorporated

Page 8 DAC Buffer A Registers (continued)

REGISTER NUMBER	RESET VALUE	REGISTER NAME
33 (0x21)	1111 1111	8 LSBs of n0 coefficient for left DAC-programmable biquad D
34 (0x22)	0000 0000	8 MSBs of n1 coefficient for left DAC-programmable biquad D
35 (0x23)	0000 0000	8 LSBs of n1 coefficient for left DAC-programmable biquad D
36 (0x24)	0000 0000	8 MSBs of n2 coefficient for left DAC-programmable biquad D
37 (0x25)	0000 0000	8 LSBs of n2 coefficient for left DAC-programmable biquad D
38 (0x26)	0000 0000	8 MSBs of d1 coefficient for left DAC-programmable biquad D
39 (0x27)	0000 0000	8 LSBs of d1 coefficient for left DAC-programmable biquad D
40 (0x28)	0000 0000	8 MSBs of d2 coefficient for left DAC-programmable biquad D
41 (0x29)	0000 0000	8 LSBs of d2 coefficient for left DAC-programmable biquad D
42 (0x2A)	0111 1111	8 MSBs of n0 coefficient for left DAC-programmable biquad E
43 (0x2B)	1111 1111	8 LSBs of n0 coefficient for left DAC-programmable biquad E
44 (0x2C)	0000 0000	8 MSBs of n1 coefficient for left DAC-programmable biquad E
45 (0x2D)	0000 0000	8 LSBs of n1 coefficient for left DAC-programmable biquad E
46 (0x2E)	0000 0000	8 MSBs of n2 coefficient for left DAC-programmable biquad E
47 (0x2F)	0000 0000	8 LSBs of n2 coefficient for left DAC-programmable biquad E
48 (0x30)	0000 0000	8 MSBs of d1 coefficient for left DAC-programmable biquad E
49 (0x31)	0000 0000	8 LSBs of d1 coefficient for left DAC-programmable biquad E
50 (0x32)	0000 0000	8 MSBs of d2 coefficient for left DAC-programmable biquad E
51 (0x33)	0000 0000	8 LSBs of d2 coefficient for left DAC-programmable biquad E
52 (0x34)	0111 1111	8 MSBs of n0 coefficient for left DAC-programmable biquad F
53 (0x35)	1111 1111	8 LSBs of n0 coefficient for left DAC-programmable biquad F
54 (0x36)	0000 0000	8 MSBs of n1 coefficient for left DAC-programmable biquad F
55 (0x37)	0000 0000	8 LSBs of n1 coefficient for left DAC-programmable biquad F
56 (0x38)	0000 0000	8 MSBs of n2 coefficient for left DAC-programmable biquad F
57 (0x39)	0000 0000	8 LSBs of n2 coefficient for left DAC-programmable biquad F
58 (0x3A)	0000 0000	8 MSBs of d1 coefficient for left DAC-programmable biquad F
59 (0x3B)	0000 0000	8 LSBs of d1 coefficient for left DAC-programmable biquad F
60 (0x3C)	0000 0000	8 MSBs of d2 coefficient for left DAC-programmable biquad F
61 (0x3D)	0000 0000	8 LSBs of d2 coefficient for left DAC-programmable biquad F
62 (0x3E)	0000 0000	Reserved
63 (0x3F)	0000 0000	Reserved
64 (0x40)	0000 0000	8 MSBs 3D PGA Gain for PRB_P23, PRB_P24 and PRB_P25
65 (0x41)	0000 0000	8 LSBs 3D PGA Gain for PRB_P23, PRB_P24 and PRB_P25
66 (0x42)	0111 1111	8 MSBs of n0 coefficient for right DAC-programmable biquad A
67 (0x43)	1111 1111	8 LSBs of n0 coefficient for right DAC-programmable biquad A
68 (0x44)	0000 0000	8 MSBs of n1 coefficient for right DAC-programmable biquad A
69 (0x45)	0000 0000	8 LSBs of n1 coefficient for right DAC-programmable biquad A
70 (0x46)	0000 0000	8 MSBs of n2 coefficient for right DAC-programmable biquad A
71 (0x47)	0000 0000	8 LSBs of n2 coefficient for right DAC-programmable biquad A
72 (0x48)	0000 0000	8 MSBs of d1 coefficient for right DAC-programmable biquad A
73 (0x49)	0000 0000	8 LSBs of d1 coefficient for right DAC-programmable biquad A
74 (0x4A)	0000 0000	8 MSBs of d2 coefficient for right DAC-programmable biquad A
75 (0x4B)	0000 0000	8 LSBs of d2 coefficient for right DAC-programmable biquad A
76 (0x4C)	0111 1111	8 MSBs of n0 coefficient for right DAC-programmable biquad B
77 (0x4D)	1111 1111	8 LSBs of n0 coefficient for right DAC-programmable biquad B
78 (0x4E)	0000 0000	8 MSBs of n1 coefficient for right DAC-programmable biquad B

Copyright © 2009, Texas Instruments Incorporated

Page 8 DAC Buffer A Registers (continued)

REGISTER NUMBER	RESET VALUE	REGISTER NAME
79 (0x4F)	0000 0000	8 LSBs of n1 coefficient for right DAC-programmable biquad B
80 (0x50)	0000 0000	8 MSBs of n2 coefficient for right DAC-programmable biquad B
81 (0x51)	0000 0000	8 LSBs of n2 coefficient for right DAC-programmable biquad B
82 (0x52)	0000 0000	8 MSBs of d1 coefficient for right DAC-programmable biquad B
83 (0x53)	0000 0000	8 LSBs of d1 coefficient for right DAC-programmable biquad B
84 (0x54)	0000 0000	8 MSBs of d2 coefficient for right DAC-programmable biquad B
85 (0x55)	0000 0000	8 LSBs of d2 coefficient for right DAC-programmable biquad B
86 (0x56)	0111 1111	8 MSBs of n0 coefficient for right DAC-programmable biquad C
87 (0x57)	1111 1111	8 LSBs of n0 coefficient for right DAC-programmable biquad C
88 (0x58)	0000 0000	8 MSBs of n1 coefficient for right DAC-programmable biquad C
89 (0x59)	0000 0000	8 LSBs of n1 coefficient for right DAC-programmable biquad C
90 (0x5A)	0000 0000	8 MSBs of n2 coefficient for right DAC-programmable biquad C
91 (0x5B)	0000 0000	8 LSBs of n2 coefficient for right DAC-programmable biquad C
92 (0x5C)	0000 0000	8 MSBs of d1 coefficient for right DAC-programmable biquad C
93 (0x5D)	0000 0000	8 LSBs of d1 coefficient for right DAC-programmable biquad C
94 (0x5E)	0000 0000	8 MSBs of d2 coefficient for right DAC-programmable biquad C
95 (0x5F)	0000 0000	8 LSBs of d2 coefficient for right DAC-programmable biquad C
96 (0x60)	0111 1111	8 MSBs of n0 coefficient for right DAC-programmable biquad D
97 (0x61)	1111 1111	8 LSBs of n0 coefficient for right DAC-programmable biquad D
98 (0x62)	0000 0000	8 MSBs of n1 coefficient for right DAC-programmable biquad D
99 (0x63)	0000 0000	8 LSBs of n1 coefficient for right DAC-programmable biquad D
100 (0x64)	0000 0000	8 MSBs of n2 coefficient for right DAC-programmable biquad D
101 (0x65)	0000 0000	8 LSBs of n2 coefficient for right DAC-programmable biquad D
102 (0x66)	0000 0000	8 MSBs of d1 coefficient for right DAC-programmable biquad D
103 (0x67)	0000 0000	8 LSBs of d1 coefficient for right DAC-programmable biquad D
104 (0x68)	0000 0000	8 MSBs of d2 coefficient for right DAC-programmable biquad D
105 (0x69)	0000 0000	8 LSBs of d2 coefficient for right DAC-programmable biquad D
106 (0x6A)	0111 1111	8 MSBs of n0 coefficient for right DAC-programmable biquad E
107 (0x6B)	1111 1111	8 LSBs of n0 coefficient for right DAC-programmable biquad E
108 (0x6C)	0000 0000	8 MSBs of n1 coefficient for right DAC-programmable biquad E
109 (0x6D)	0000 0000	8 LSBs of n1 coefficient for right DAC-programmable biquad E
110 (0x6E)	0000 0000	8 MSBs of n2 coefficient for right DAC-programmable biquad E
111 (0x6F)	0000 0000	8 LSBs of n2 coefficient for right DAC-programmable biquad E
112 (0x70)	0000 0000	8 MSBs of d1 coefficient for right DAC-programmable biquad E
113 (0x71)	0000 0000	8 LSBs of d1 coefficient for right DAC-programmable biquad E
114 (0x72)	0000 0000	8 MSBs of d2 coefficient for right DAC-programmable biquad E
115 (0x73)	0000 0000	8 LSBs of d2 coefficient for right DAC-programmable biquad E
116 (0x74)	0111 1111	8 MSBs of n0 coefficient for right DAC-programmable biquad F
117 (0x75)	1111 1111	8 LSBs of n0 coefficient for right DAC-programmable biquad F
118 (0x76)	0000 0000	8 MSBs of n1 coefficient for right DAC-programmable biquad F
119 (0x77)	0000 0000	8 LSBs of n1 coefficient for right DAC-programmable biquad F
120 (0x78)	0000 0000	8 MSBs of n2 coefficient for right DAC-programmable biquad F
121 (0x79)	0000 0000	8 LSBs of n2 coefficient for right DAC-programmable biquad F
122 (0x7A)	0000 0000	8 MSBs of d1 coefficient for right DAC-programmable biquad F
123 (0x7B)	0000 0000	8 LSBs of d1 coefficient for right DAC-programmable biquad F
124 (0x7C)	0000 0000	8 MSBs of d2 coefficient for right DAC-programmable biquad F

Copyright © 2009, Texas Instruments Incorporated

Page 8 DAC Buffer A Registers (continued)

REGISTER NUMBER	RESET VALUE	REGISTER NAME
125 (0x7D)	0000 0000	8 LSBs of d2 coefficient for right DAC-programmable biquad F
126 (0x7E)	0000 0000	Reserved
127 (0x7F)	0000 0000	Reserved

Copyright © 2009, Texas Instruments Incorporated

6.7 Control Registers, Page 9: DAC Digital Filter Coefficients

Default values shown for this page only become valid 100 µs following a hardware or software reset.

Page 9 / Register 0 (0x00): Page Control Register

BIT	READ/ WRITE	RESET VALUE	DESCRIPTION
D7–D0	R/W	0000 0000	0000 0000: Page 0 selected 0000 0001: Page 1 selected ... 1111 1110: Page 254 selected 1111 1111: Page 255 selected

The remaining page 9 registers are either reserved registers or are used for setting coefficients for the various filters in the TLV320AIC3110. Reserved registers should not be written to.

The filter coefficient registers are arranged in pairs, with two adjacent 8-bit registers containing the 16-bit coefficient for a single filter. The 16-bit integer contained in the MSB and LSB registers for a coefficient are interpreted as a 2s-complement integer, with possible values ranging from –32,768 to 32,767. When programming any coefficient value for a filter, the MSB register should always be written first, immediately followed by the LSB register. Even if only the MSB or LSB portion of the coefficient changes, both registers should be written in this sequence. Table 6-7 is a list of the page-9 registers, excepting the previously described register 0.

Table 6-7. Page 9 DAC Buffer A Registers

REGISTER NUMBER	RESET VALUE	REGISTER NAME
1	XXXX XXXX	Reserved. Do not write to this register.
2 (0x02)	0111 1111	8 MSBs of n0 coefficient for left DAC-programmable first-order IIR
3 (0x03)	1111 1111	8 LSBs of n0 coefficient for left DAC-programmable first-order IIR
4 (0x04)	0000 0000	8 MSBs of n1 coefficient for left DAC-programmable first-order IIR
5 (0x05)	0000 0000	8 LSBs of n1 coefficient for left DAC-programmable first-order IIR
6 (0x06)	0000 0000	8 MSBs of d1 coefficient for left DAC-programmable first-order IIR
7 (0x07)	0000 0000	8 LSBs of d1 coefficient for left DAC-programmable first-order IIR
8 (0x08)	0111 1111	8 MSBs of n0 coefficient for right DAC-programmable first-order IIR
9 (0x09)	1111 1111	8 LSBs of n0 coefficient for right DAC-programmable first-order IIR
10 (0x0A)	0000 0000	8 MSBs of n1 coefficient for right DAC-programmable first-order IIR
11 (0x0B)	0000 0000	8 LSBs of n1 coefficient for right DAC-programmable first-order IIR
12 (0x0C)	0000 0000	8 MSBs of d1 coefficient for right DAC-programmable first-order IIR
13 (0x0D)	0000 0000	8 LSBs of d1 coefficient for right DAC-programmable first-order IIR
14 (0x0E)	0111 1111	8 MSBs of n0 coefficient for DRC first-order high-pass filter
15 (0x0F)	1111 0111	8 LSBs of n0 coefficient for DRC first-order high-pass filter
16 (0x10)	1000 0000	8 MSBs of n1 coefficient for DRC first-order high-pass filter
17 (0x11)	0000 1001	8 LSBs of n1 coefficient for DRC first-order high-pass filter
18 (0x12)	0111 1111	8 MSBs of d1 coefficient for DRC first-order high-pass filter
19 (0x13)	1110 1111	8 LSBs of d1 coefficient for DRC first-order high-pass filter
20 (0x14)	0000 0000	8 MSBs of n0 coefficient for DRC first-order low-pass filter
21 (0x15)	0001 0001	8 LSBs of n0 coefficient for DRC first-order low-pass filter
22 (0x16)	0000 0000	8 MSBs of n1 coefficient for DRC first-order low-pass filter
23 (0x17)	0001 0001	8 LSBs of n1 coefficient for DRC first-order low-pass filter
24 (0x18)	0111 1111	8 MSBs of d1 coefficient for DRC first-order low-pass filter
25 (0x19)	1101 1110	8 LSBs of d1 coefficient for DRC first-order low-pass filter
26-127	0000 0000	Reserved

Copyright © 2009, Texas Instruments Incorporated

6.8 Control Registers, Page 12: DAC Programmable Coefficients Buffer B (1:63)

Table 6-8. Page 12 DAC Buffer B Registers

REGISTER NUMBER	RESET VALUE	REGISTER NAME
1	0000 0000	Reserved. Do not write to this register.
2 (0x02)	0111 1111	8 MSBs of n0 coefficient for left DAC-programmable biquad A
3 (0x03)	1111 1111	8 LSBs of n0 coefficient for left DAC-programmable biquad A
4 (0x04)	0000 0000	8 MSBs of n1 coefficient for left DAC-programmable biquad A
5 (0x05)	0000 0000	8 LSBs of n1 coefficient for left DAC-programmable biquad A
6 (0x06)	0000 0000	8 MSBs of n2 coefficient for left DAC-programmable biquad A
7 (0x07)	0000 0000	8 LSBs of n2 coefficient for left DAC-programmable biquad A
8 (0x08)	0000 0000	8 MSBs of d1 coefficient for left DAC-programmable biquad A
9 (0x09)	0000 0000	8 LSBs of d1 coefficient for left DAC-programmable biquad A
10 (0x0A)	0000 0000	8 MSBs of d2 coefficient for left DAC-programmable biquad A
11 (0x0B)	0000 0000	8 LSBs of d2 coefficient for left DAC-programmable biquad A
12 (0x0C)	0111 1111	8 MSBs of n0 coefficient for left DAC-programmable biquad B
13 (0x0D)	1111 1111	8 LSBs of n0 coefficient for left DAC-programmable biquad B
14 (0x0E)	0000 0000	8 MSBs of n1 coefficient for left DAC-programmable biquad B
15 (0x0F)	0000 0000	8 LSBs of n1 coefficient for left DAC-programmable biquad B
16 (0x10)	0000 0000	8 MSBs of n2 coefficient for left DAC-programmable biquad B
17 (0x11)	0000 0000	8 LSBs of n2 coefficient for left DAC-programmable biquad B
18 (0x12)	0000 0000	8 MSBs of d1 coefficient for left DAC-programmable biquad B
19 (0x13)	0000 0000	8 LSBs of d1 coefficient for left DAC-programmable biquad B
20 (0x14)	0000 0000	8 MSBs of d2 coefficient for left DAC-programmable biquad B
21 (0x15)	0000 0000	8 LSBs of d2 coefficient for left DAC-programmable biquad B
22 (0x16)	0111 1111	8 MSBs of n0 coefficient for left DAC-programmable biquad C
23 (0x17)	1111 1111	8 LSBs of n0 coefficient for left DAC-programmable biquad C
24 (0x18)	0000 0000	8 MSBs of n1 coefficient for left DAC-programmable biquad C
25 (0x19)	0000 0000	8 LSBs of n1 coefficient for left DAC-programmable biquad C
26 (0x1A)	0000 0000	8 MSBs of n2 coefficient for left DAC-programmable biquad C
27 (0x1B)	0000 0000	8 LSBs of n2 coefficient for left DAC-programmable biquad C
28 (0x1C)	0000 0000	8 MSBs of d1 coefficient for left DAC-programmable biquad C
29 (0x1D)	0000 0000	8 LSBs of d1 coefficient for left DAC-programmable biquad C
30 (0x1E)	0000 0000	8 MSBs of d2 coefficient for left DAC-programmable biquad C
31 (0x1F)	0000 0000	8 LSBs of d2 coefficient for left DAC-programmable biquad C
32 (0x20)	0111 1111	8 MSBs of n0 coefficient for left DAC-programmable biquad D
33 (0x21)	1111 1111	8 LSBs of n0 coefficient for left DAC-programmable biquad D
34 (0x22)	0000 0000	8 MSBs of n1 coefficient for left DAC-programmable biquad D
35 (0x23)	0000 0000	8 LSBs of n1 coefficient for left DAC-programmable biquad D
36 (0x24)	0000 0000	8 MSBs of n2 coefficient for left DAC-programmable biquad D
37 (0x25)	0000 0000	8 LSBs of n2 coefficient for left DAC-programmable biquad D
38 (0x26)	0000 0000	8 MSBs of d1 coefficient for left DAC-programmable biquad D
39 (0x27)	0000 0000	8 LSBs of d1 coefficient for left DAC-programmable biquad D
40 (0x28)	0000 0000	8 MSBs of d2 coefficient for left DAC-programmable biquad D
41 (0x29)	0000 0000	8 LSBs of d2 coefficient for left DAC-programmable biquad D
42 (0x2A)	0111 1111	8 MSBs of n0 coefficient for left DAC-programmable biquad E
43 (0x2B)	1111 1111	8 LSBs of n0 coefficient for left DAC-programmable biquad E

Copyright © 2009, Texas Instruments Incorporated

Page 12 DAC Buffer B Registers (continued)

REGISTER NUMBER	RESET VALUE	REGISTER NAME
44 (0x2C)	0000 0000	8 MSBs of n1 coefficient for left DAC-programmable biquad E
45 (0x2D)	0000 0000	8 LSBs of n1 coefficient for left DAC-programmable biquad E
46 (0x2E)	0000 0000	8 MSBs of n2 coefficient for left DAC-programmable biquad E
47 (0x2F)	0000 0000	8 LSBs of n2 coefficient for left DAC-programmable biquad E
48 (0x30)	0000 0000	8 MSBs of d1 coefficient for left DAC-programmable biquad E
49 (0x31)	0000 0000	8 LSBs of d1 coefficient for left DAC-programmable biquad E
50 (0x32)	0000 0000	8 MSBs of d2 coefficient for left DAC-programmable biquad E
51 (0x33)	0000 0000	8 LSBs of d2 coefficient for left DAC-programmable biquad E
52 (0x34)	0111 1111	8 MSBs of n0 coefficient for left DAC-programmable biquad F
53 (0x35)	1111 1111	8 LSBs of n0 coefficient for left DAC-programmable biquad F
54 (0x36)	0000 0000	8 MSBs of n1 coefficient for left DAC-programmable biquad F
55 (0x37)	0000 0000	8 LSBs of n1 coefficient for left DAC-programmable biquad F
56 (0x38)	0000 0000	8 MSBs of n2 coefficient for left DAC-programmable biquad F
57 (0x39)	0000 0000	8 LSBs of n2 coefficient for left DAC-programmable biquad F
58 (0x3A)	0000 0000	8 MSBs of d1 coefficient for left DAC-programmable biquad F
59 (0x3B)	0000 0000	8 LSBs of d1 coefficient for left DAC-programmable biquad F
60 (0x3C)	0000 0000	8 MSBs of d2 coefficient for left DAC-programmable biquad F
61 (0x3D)	0000 0000	8 LSBs of d2 coefficient for left DAC-programmable biquad F
62 (0x3E)	0000 0000	Reserved
63 (0x3F)	0000 0000	Reserved
64 (0x40)	0000 0000	8 MSBs 3D PGA Gain for PRB_P23, PRB_P24 and PRB_P25
65 (0x41)	0000 0000	8 LSBs 3D PGA Gain for PRB_P23, PRB_P24 and PRB_P25
66 (0x42)	0111 1111	8 MSBs of n0 coefficient for right DAC-programmable biquad A
67 (0x43)	1111 1111	8 LSBs of n0 coefficient for right DAC-programmable biquad A
68 (0x44)	0000 0000	8 MSBs of n1 coefficient for right DAC-programmable biquad A
69 (0x45)	0000 0000	8 LSBs of n1 coefficient for right DAC-programmable biquad A
70 (0x46)	0000 0000	8 MSBs of n2 coefficient for right DAC-programmable biquad A
71 (0x47)	0000 0000	8 LSBs of n2 coefficient for right DAC-programmable biquad A
72 (0x48)	0000 0000	8 MSBs of d1 coefficient for right DAC-programmable biquad A
73 (0x49)	0000 0000	8 LSBs of d1 coefficient for right DAC-programmable biquad A
74 (0x4A)	0000 0000	8 MSBs of d2 coefficient for right DAC-programmable biquad A
75 (0x4B)	0000 0000	8 LSBs of d2 coefficient for right DAC-programmable biquad A
76 (0x4C)	0111 1111	8 MSBs of n0 coefficient for right DAC-programmable biquad B
77 (0x4D)	1111 1111	8 LSBs of n0 coefficient for right DAC-programmable biquad B
78 (0x4E)	0000 0000	8 MSBs of n1 coefficient for right DAC-programmable biquad B
79 (0x4F)	0000 0000	8 LSBs of n1 coefficient for right DAC-programmable biquad B
80 (0x50)	0000 0000	8 MSBs of n2 coefficient for right DAC-programmable biquad B
81 (0x51)	0000 0000	8 LSBs of n2 coefficient for right DAC-programmable biquad B
82 (0x52)	0000 0000	8 MSBs of d1 coefficient for right DAC-programmable biquad B
83 (0x53)	0000 0000	8 LSBs of d1 coefficient for right DAC-programmable biquad B
84 (0x54)	0000 0000	8 MSBs of d2 coefficient for right DAC-programmable biquad B
85 (0x55)	0000 0000	8 LSBs of d2 coefficient for right DAC-programmable biquad B
86 (0x56)	0111 1111	8 MSBs of n0 coefficient for right DAC-programmable biquad C
87 (0x57)	1111 1111	8 LSBs of n0 coefficient for right DAC-programmable biquad C
88 (0x58)	0000 0000	8 MSBs of n1 coefficient for right DAC-programmable biquad C
89 (0x59)	0000 0000	8 LSBs of n1 coefficient for right DAC-programmable biquad C

Copyright © 2009, Texas Instruments Incorporated

Page 12 DAC Buffer B Registers (continued)

REGISTER NUMBER	RESET VALUE	REGISTER NAME
90 (0x5A)	0000 0000	8 MSBs of n2 coefficient for right DAC-programmable biquad C
91 (0x5B)	0000 0000	8 LSBs of n2 coefficient for right DAC-programmable biquad C
92 (0x5C)	0000 0000	8 MSBs of d1 coefficient for right DAC-programmable biquad C
93 (0x5D)	0000 0000	8 LSBs of d1 coefficient for right DAC-programmable biquad C
94 (0x5E)	0000 0000	8 MSBs of d2 coefficient for right DAC-programmable biquad C
95 (0x5F)	0000 0000	8 LSBs of d2 coefficient for right DAC-programmable biquad C
96 (0x60)	0111 1111	8 MSBs of n0 coefficient for right DAC-programmable biquad D
97 (0x61)	1111 1111	8 LSBs of n0 coefficient for right DAC-programmable biquad D
98 (0x62)	0000 0000	8 MSBs of n1 coefficient for right DAC-programmable biquad D
99 (0x63)	0000 0000	8 LSBs of n1 coefficient for right DAC-programmable biquad D
100 (0x64)	0000 0000	8 MSBs of n2 coefficient for right DAC-programmable biquad D
101 (0x65)	0000 0000	8 LSBs of n2 coefficient for right DAC-programmable biquad D
102 (0x66)	0000 0000	8 MSBs of d1 coefficient for right DAC-programmable biquad D
103 (0x67)	0000 0000	8 LSBs of d1 coefficient for right DAC-programmable biquad D
104 (0x68)	0000 0000	8 MSBs of d2 coefficient for right DAC-programmable biquad D
105 (0x69)	0000 0000	8 LSBs of d2 coefficient for right DAC-programmable biquad D
106 (0x6A)	0111 1111	8 MSBs of n0 coefficient for right DAC-programmable biquad E
107 (0x6B)	1111 1111	8 LSBs of n0 coefficient for right DAC-programmable biquad E
108 (0x6C)	0000 0000	8 MSBs of n1 coefficient for right DAC-programmable biquad E
109 (0x6D)	0000 0000	8 LSBs of n1 coefficient for right DAC-programmable biquad E
110 (0x6E)	0000 0000	8 MSBs of n2 coefficient for right DAC-programmable biquad E
111 (0x6F)	0000 0000	8 LSBs of n2 coefficient for right DAC-programmable biquad E
112 (0x70)	0000 0000	8 MSBs of d1 coefficient for right DAC-programmable biquad E
113 (0x71)	0000 0000	8 LSBs of d1 coefficient for right DAC-programmable biquad E
114 (0x72)	0000 0000	8 MSBs of d2 coefficient for right DAC-programmable biquad E
115 (0x73)	0000 0000	8 LSBs of d2 coefficient for right DAC-programmable biquad E
116 (0x74)	0111 1111	8 MSBs of n0 coefficient for right DAC-programmable biquad F
117 (0x75)	1111 1111	8 LSBs of n0 coefficient for right DAC-programmable biquad F
118 (0x76)	0000 0000	8 MSBs of n1 coefficient for right DAC-programmable biquad F
119 (0x77)	0000 0000	8 LSBs of n1 coefficient for right DAC-programmable biquad F
120 (0x78)	0000 0000	8 MSBs of n2 coefficient for right DAC-programmable biquad F
121 (0x79)	0000 0000	8 LSBs of n2 coefficient for right DAC-programmable biquad F
122 (0x7A)	0000 0000	8 MSBs of d1 coefficient for right DAC-programmable biquad F
123 (0x7B)	0000 0000	8 LSBs of d1 coefficient for right DAC-programmable biquad F
124 (0x7C)	0000 0000	8 MSBs of d2 coefficient for right DAC-programmable biquad F
125 (0x7D)	0000 0000	8 LSBs of d2 coefficient for right DAC-programmable biquad F
126	0000 0000	Reserved
127	0000 0000	Reserved

Copyright © 2009, Texas Instruments Incorporated

6.9 Control Registers, Page 13: DAC Programmable Coefficients RAM Buffer B (65:127)

Table 6-9. Page 13 DAC Buffer B Registers

REGISTER NUMBER	RESET VALUE	REGISTER NAME
1	0000 0000	Reserved. Do not write to this register.
2 (0x02)	0111 1111	8 MSBs of n0 coefficient for left DAC-programmable first-order IIR
3 (0x03)	1111 1111	8 LSBs of n0 coefficient for left DAC-programmable first-order IIR
4 (0x04)	0000 0000	8 MSBs of n1 coefficient for left DAC-programmable first-order IIR
5 (0x05)	0000 0000	8 LSBs of n1 coefficient for left DAC-programmable first-order IIR
6 (0x06)	0000 0000	8 MSBs of d1 coefficient for left DAC-programmable first-order IIR
7 (0x07)	0000 0000	8 LSBs of d1 coefficient for left DAC-programmable first-order IIR
8 (0x08)	0111 1111	8 MSBs of n0 coefficient for right DAC-programmable first-order IIR
9 (0x09)	1111 1111	8 LSBs of n0 coefficient for right DAC-programmable first-order IIR
10 (0x0A)	0000 0000	8 MSBs of n1 coefficient for right DAC-programmable first-order IIR
11 (0x0B)	0000 0000	8 LSBs of n1 coefficient for right DAC-programmable first-order IIR
12 (0x0C)	0000 0000	8 MSBs of d1 coefficient for right DAC-programmable first-order IIR
13 (0x0D)	0000 0000	8 LSBs of d1 coefficient for right DAC-programmable first-order IIR
14 (0x0E)	0111 1111	8 MSBs of n0 coefficient for DRC first-order high-pass filter
15 (0x0F)	1111 0111	8 LSBs of n0 coefficient for DRC first-order high-pass filter
16 (0x10)	1000 0000	8 MSBs of n1 coefficient for DRC first-order high-pass filter
17 (0x11)	0000 1001	8 LSBs of n1 coefficient for DRC first-order high-pass filter
18 (0x12)	0111 1111	8 MSBs of d1 coefficient for DRC first-order high-pass filter
19 (0x13)	1110 1111	8 LSBs of d1 coefficient for DRC first-order high-pass filter
20 (0x14)	0000 0000	8 MSBs of n0 coefficient for DRC first-order low-pass filter
21 (0x15)	0001 0001	8 LSBs of n0 coefficient for DRC first-order low-pass filter
22 (0x16)	0000 0000	8 MSBs of n1 coefficient for DRC first-order low-pass filter
23 (0x17)	0001 0001	8 LSBs of n1 coefficient for DRC first-order low-pass filter
24 (0x18)	0111 1111	8 MSBs of d1 coefficient for DRC first-order low-pass filter
25 (0x19)	1101 1110	8 LSBs of d1 coefficient for DRC first-order low-pass filter
26–127	0000 0000	Reserved

Copyright © 2009, Texas Instruments Incorporated

PACKAGING INFORMATION

Orderable Device	Status (1)	Package Type	Package Drawing	Pins	Package Qty	Eco Plan (2)	Lead/Ball Finish	MSL Peak Temp (3)	Op Temp (°C)	Top-Side Markings (4)	Samples
TLV320AIC3110IRHBR	ACTIVE	QFN	RHB	32	3000	Green (RoHS & no Sb/Br)	CU NIPDAU	Level-2-260C-1 YEAR	-40 to 85	AIC3110	Samples
TLV320AIC3110IRHBT	ACTIVE	QFN	RHB	32	250	Green (RoHS & no Sb/Br)	CU NIPDAU	Level-2-260C-1 YEAR	-40 to 85	AIC3110	Samples

(1) The marketing status values are defined as follows:
ACTIVE: Product device recommended for new designs.
LIFEBUY: TI has announced that the device will be discontinued, and a lifetime-buy period is in effect.
NRND: Not recommended for new designs. Device is in production to support existing customers, but TI does not recommend using this part in a new design.
PREVIEW: Device has been announced but is not in production. Samples may or may not be available.
OBSOLETE: TI has discontinued the production of the device.

(2) Eco Plan - The planned eco-friendly classification: Pb-Free (RoHS), Pb-Free (RoHS Exempt), or Green (RoHS & no Sb/Br) - please check http://www.ti.com/productcontent for the latest availability information and additional product content details.
TBD: The Pb-Free/Green conversion plan has not been defined.
Pb-Free (RoHS): TI's terms "Lead-Free" or "Pb-Free" mean semiconductor products that are compatible with the current RoHS requirements for all 6 substances, including the requirement that lead not exceed 0.1% by weight in homogeneous materials. Where designed to be soldered at high temperatures, TI Pb-Free products are suitable for use in specified lead-free processes.
Pb-Free (RoHS Exempt): This component has a RoHS exemption for either 1) lead-based flip-chip solder bumps used between the die and package, or 2) lead-based die adhesive used between the die and leadframe. The component is otherwise considered Pb-Free (RoHS compatible) as defined above.
Green (RoHS & no Sb/Br): TI defines "Green" to mean Pb-Free (RoHS compatible), and free of Bromine (Br) and Antimony (Sb) based flame retardants (Br or Sb do not exceed 0.1% by weight in homogeneous material)

(3) MSL, Peak Temp. -- The Moisture Sensitivity Level rating according to the JEDEC industry standard classifications, and peak solder temperature.

(4) Only one of markings shown within the brackets will appear on the physical device.

Important Information and Disclaimer: The information provided on this page represents TI's knowledge and belief as of the date that it is provided. TI bases its knowledge and belief on information provided by third parties, and makes no representation or warranty as to the accuracy of such information. Efforts are underway to better integrate information from third parties. TI has taken and continues to take reasonable steps to provide representative and accurate information but may not have conducted destructive testing or chemical analysis on incoming materials and chemicals. TI and TI suppliers consider certain information to be proprietary, and thus CAS numbers and other limited information may not be available for release.

In no event shall TI's liability arising out of such information exceed the total purchase price of the TI part(s) at issue in this document sold by TI to Customer on an annual basis.

TAPE AND REEL INFORMATION

REEL DIMENSIONS

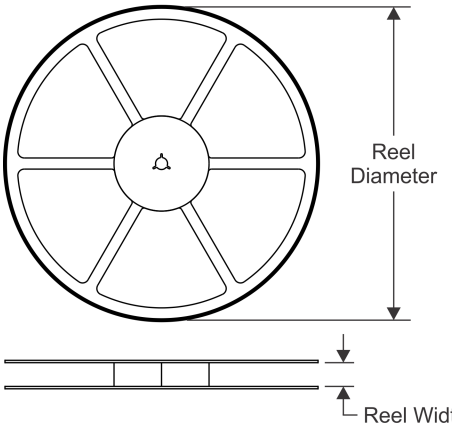

TAPE DIMENSIONS

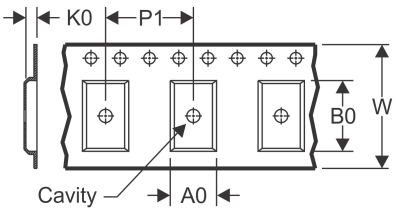

A0	Dimension designed to accommodate the component width
B0	Dimension designed to accommodate the component length
K0	Dimension designed to accommodate the component thickness
W	Overall width of the carrier tape
P1	Pitch between successive cavity centers

QUADRANT ASSIGNMENTS FOR PIN 1 ORIENTATION IN TAPE

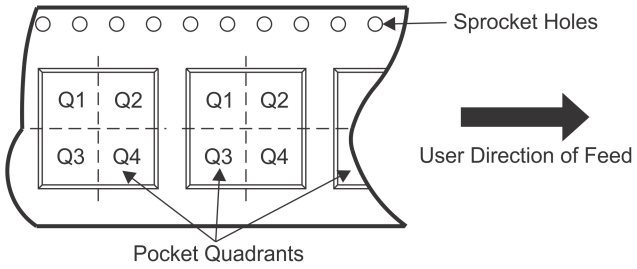

*All dimensions are nominal

Device	Package Type	Package Drawing	Pins	SPQ	Reel Diameter (mm)	Reel Width W1 (mm)	A0 (mm)	B0 (mm)	K0 (mm)	P1 (mm)	W (mm)	Pin1 Quadrant
TLV320AIC3110IRHBR	QFN	RHB	32	3000	330.0	12.4	5.3	5.3	1.5	8.0	12.0	Q2
TLV320AIC3110IRHBT	QFN	RHB	32	250	180.0	12.4	5.3	5.3	1.5	8.0	12.0	Q2
TLV320AIC3110IRHBT	QFN	RHB	32	250	180.0	12.4	5.3	5.3	1.5	8.0	12.0	Q2

TAPE AND REEL BOX DIMENSIONS

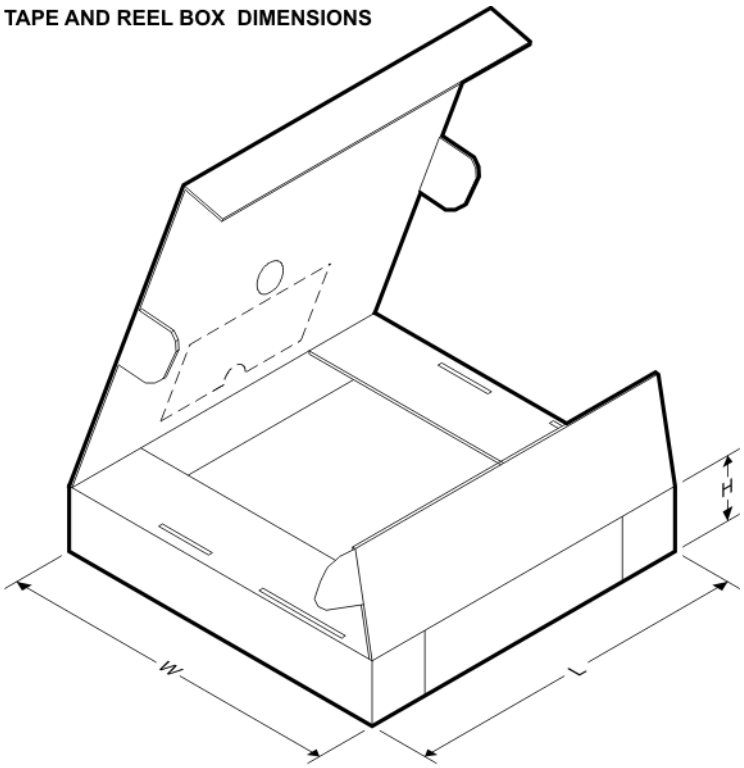

*All dimensions are nominal

Device	Package Type	Package Drawing	Pins	SPQ	Length (mm)	Width (mm)	Height (mm)
TLV320AIC3110IRHBR	QFN	RHB	32	3000	367.0	367.0	35.0
TLV320AIC3110IRHBT	QFN	RHB	32	250	210.0	185.0	35.0
TLV320AIC3110IRHBT	QFN	RHB	32	250	210.0	185.0	35.0

RHB (S–PVQFN–N32) PLASTIC QUAD FLATPACK NO–LEAD

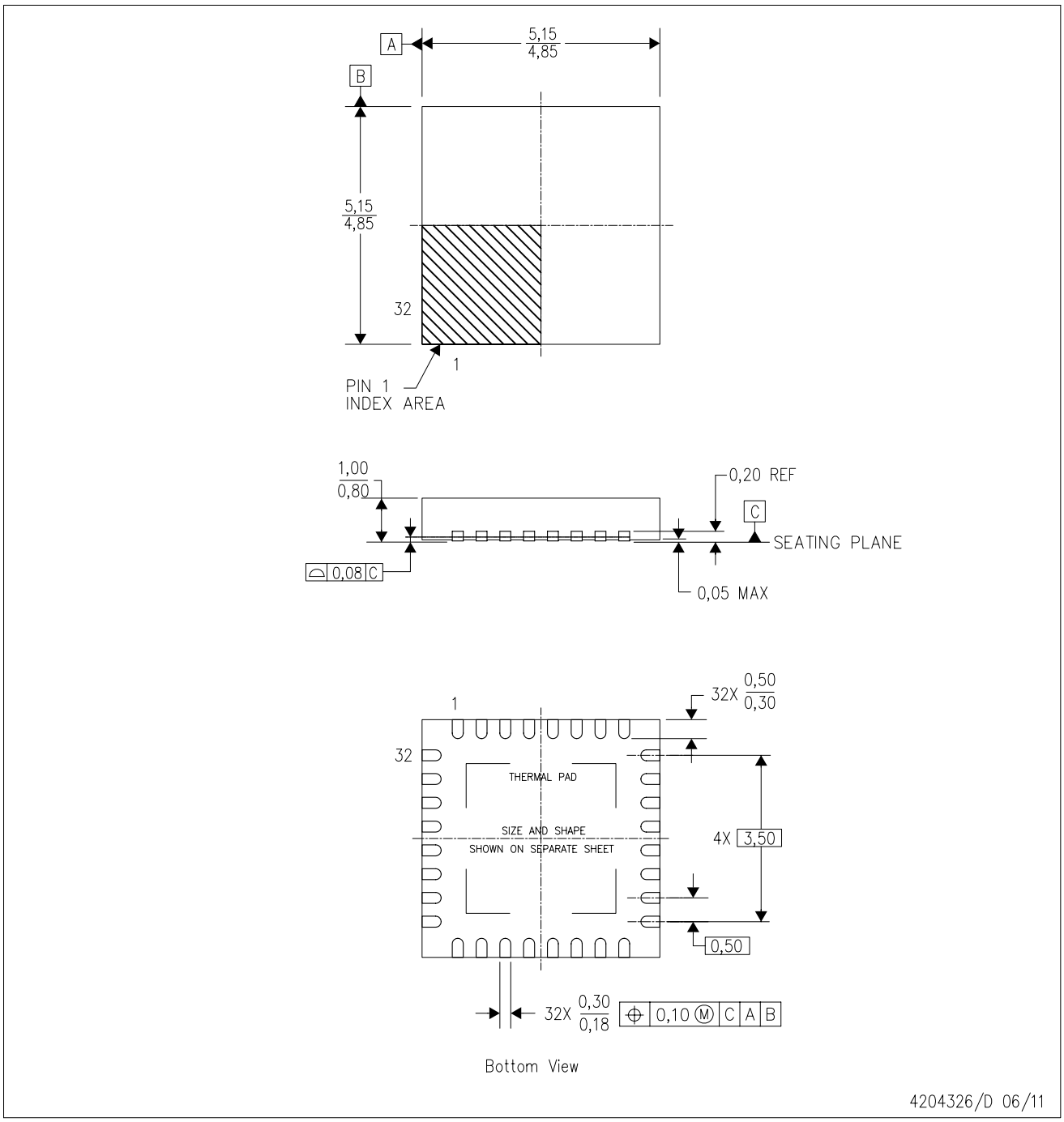

NOTES:
A. All linear dimensions are in millimeters. Dimensioning and tolerancing per ASME Y14.5M–1994.
B. This drawing is subject to change without notice.
C. QFN (Quad Flatpack No–Lead) Package configuration.
D. The package thermal pad must be soldered to the board for thermal and mechanical performance.
E. See the additional figure in the Product Data Sheet for details regarding the exposed thermal pad features and dimensions.
F. Falls within JEDEC MO–220.

RHB (S–PVQFN–N32) PLASTIC QUAD FLATPACK NO–LEAD

THERMAL INFORMATION

This package incorporates an exposed thermal pad that is designed to be attached directly to an external heatsink. The thermal pad must be soldered directly to the printed circuit board (PCB). After soldering, the PCB can be used as a heatsink. In addition, through the use of thermal vias, the thermal pad can be attached directly to the appropriate copper plane shown in the electrical schematic for the device, or alternatively, can be attached to a special heatsink structure designed into the PCB. This design optimizes the heat transfer from the integrated circuit (IC).

For information on the Quad Flatpack No–Lead (QFN) package and its advantages, refer to Application Report, QFN/SON PCB Attachment, Texas Instruments Literature No. SLUA271. This document is available at www.ti.com.

The exposed thermal pad dimensions for this package are shown in the following illustration.

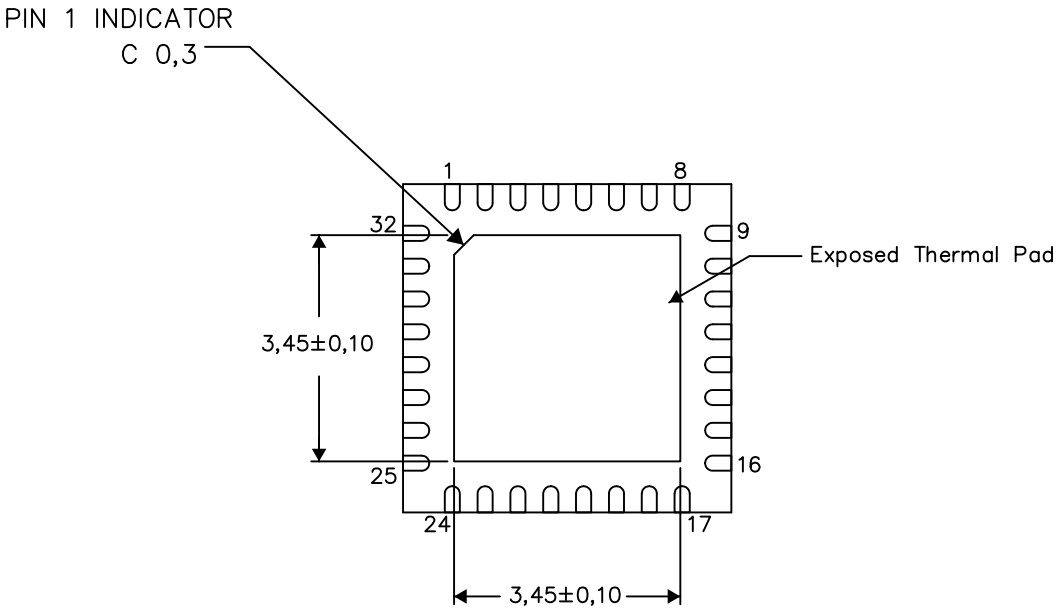

Bottom View

Exposed Thermal Pad Dimensions

4206356–2/X 12/12

NOTE: A. All linear dimensions are in millimeters

RHB (S–PVQFN–N32) PLASTIC QUAD FLATPACK NO–LEAD

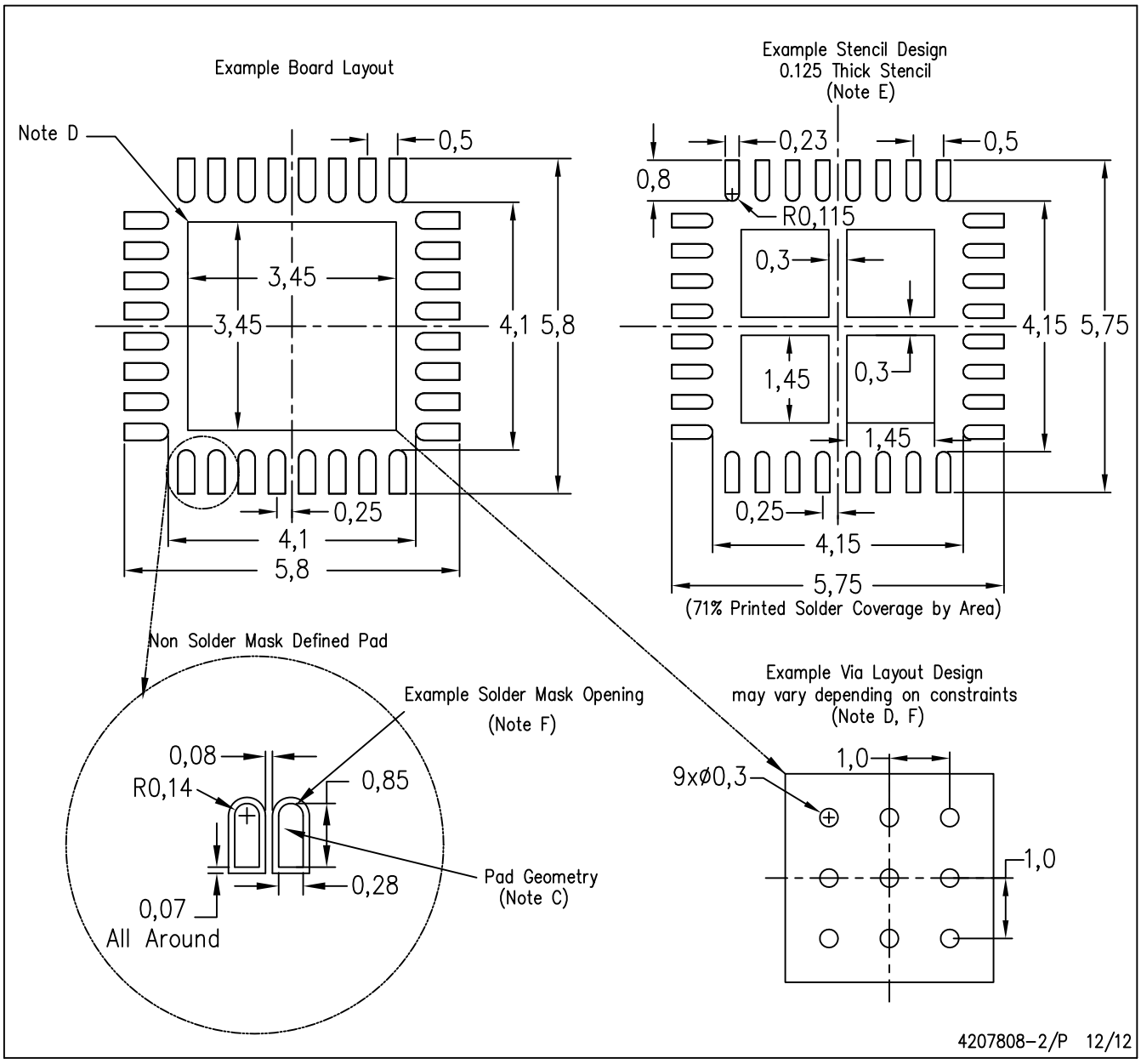

NOTES:
A. All linear dimensions are in millimeters.
B. This drawing is subject to change without notice.
C. Publication IPC–7351 is recommended for alternate designs.
D. This package is designed to be soldered to a thermal pad on the board. Refer to Application Note, Quad Flat–Pack Packages, Texas Instruments Literature No. SLUA271, and also the Product Data Sheets for specific thermal information, via requirements, and recommended board layout. These documents are available at www.ti.com <http://www.ti.com>.
E. Laser cutting apertures with trapezoidal walls and also rounding corners will offer better paste release. Customers should contact their board assembly site for stencil design recommendations. Refer to IPC 7525 for stencil design considerations.
F. Customers should contact their board fabrication site for recommended solder mask tolerances and via tenting recommendations for vias placed in the thermal pad.

IMPORTANT NOTICE

Texas Instruments Incorporated and its subsidiaries (TI) reserve the right to make corrections, enhancements, improvements and other changes to its semiconductor products and services per JESD46, latest issue, and to discontinue any product or service per JESD48, latest issue. Buyers should obtain the latest relevant information before placing orders and should verify that such information is current and complete. All semiconductor products (also referred to herein as “components”) are sold subject to TI’s terms and conditions of sale supplied at the time of order acknowledgment.

TI warrants performance of its components to the specifications applicable at the time of sale, in accordance with the warranty in TI’s terms and conditions of sale of semiconductor products. Testing and other quality control techniques are used to the extent TI deems necessary to support this warranty. Except where mandated by applicable law, testing of all parameters of each component is not necessarily performed.

TI assumes no liability for applications assistance or the design of Buyers’ products. Buyers are responsible for their products and applications using TI components. To minimize the risks associated with Buyers’ products and applications, Buyers should provide adequate design and operating safeguards.

TI does not warrant or represent that any license, either express or implied, is granted under any patent right, copyright, mask work right, or other intellectual property right relating to any combination, machine, or process in which TI components or services are used. Information published by TI regarding third-party products or services does not constitute a license to use such products or services or a warranty or endorsement thereof. Use of such information may require a license from a third party under the patents or other intellectual property of the third party, or a license from TI under the patents or other intellectual property of TI.

Reproduction of significant portions of TI information in TI data books or data sheets is permissible only if reproduction is without alteration and is accompanied by all associated warranties, conditions, limitations, and notices. TI is not responsible or liable for such altered documentation. Information of third parties may be subject to additional restrictions.

Resale of TI components or services with statements different from or beyond the parameters stated by TI for that component or service voids all express and any implied warranties for the associated TI component or service and is an unfair and deceptive business practice. TI is not responsible or liable for any such statements.

Buyer acknowledges and agrees that it is solely responsible for compliance with all legal, regulatory and safety-related requirements concerning its products, and any use of TI components in its applications, notwithstanding any applications-related information or support that may be provided by TI. Buyer represents and agrees that it has all the necessary expertise to create and implement safeguards which anticipate dangerous consequences of failures, monitor failures and their consequences, lessen the likelihood of failures that might cause harm and take appropriate remedial actions. Buyer will fully indemnify TI and its representatives against any damages arising out of the use of any TI components in safety-critical applications.

In some cases, TI components may be promoted specifically to facilitate safety-related applications. With such components, TI’s goal is to help enable customers to design and create their own end-product solutions that meet applicable functional safety standards and requirements. Nonetheless, such components are subject to these terms.

No TI components are authorized for use in FDA Class III (or similar life-critical medical equipment) unless authorized officers of the parties have executed a special agreement specifically governing such use.

Only those TI components which TI has specifically designated as military grade or “enhanced plastic” are designed and intended for use in military/aerospace applications or environments. Buyer acknowledges and agrees that any military or aerospace use of TI components which have ***not*** been so designated is solely at the Buyer's risk, and that Buyer is solely responsible for compliance with all legal and regulatory requirements in connection with such use.

TI has specifically designated certain components as meeting ISO/TS16949 requirements, mainly for automotive use. In any case of use of non-designated products, TI will not be responsible for any failure to meet ISO/TS16949.

Products		**Applications**	
Audio	www.ti.com/audio	Automotive and Transportation	www.ti.com/automotive
Amplifiers	amplifier.ti.com	Communications and Telecom	www.ti.com/communications
Data Converters	dataconverter.ti.com	Computers and Peripherals	www.ti.com/computers
DLP® Products	www.dlp.com	Consumer Electronics	www.ti.com/consumer-apps
DSP	dsp.ti.com	Energy and Lighting	www.ti.com/energy
Clocks and Timers	www.ti.com/clocks	Industrial	www.ti.com/industrial
Interface	interface.ti.com	Medical	www.ti.com/medical
Logic	logic.ti.com	Security	www.ti.com/security
Power Mgmt	power.ti.com	Space, Avionics and Defense	www.ti.com/space-avionics-defense
Microcontrollers	microcontroller.ti.com	Video and Imaging	www.ti.com/video
RFID	www.ti-rfid.com		
OMAP Applications Processors	www.ti.com/omap	**TI E2E Community**	e2e.ti.com
Wireless Connectivity	www.ti.com/wirelessconnectivity		

Mailing Address: Texas Instruments, Post Office Box 655303, Dallas, Texas 75265
Copyright © 2013, Texas Instruments Incorporated

Mouser Electronics

Authorized Distributor

Click to View Pricing, Inventory, Delivery & Lifecycle Information:

Texas Instruments:

TLV320AIC3110EVM-U