TLP621, TLP621-2, TLP621-4

HIGH DENSITY MOUNTING PHOTOTRANSISTOR OPTICALLY COUPLED ISOLATORS

APPROVALS

- UL recognised, File No. E91231

DESCRIPTION

The TLP621, TLP621-2 , TLP621-4 series of optically coupled isolators consist of infrared light emitting diodes and NPN silicon photo transistors in space efficient dual in line plastic packages.

FEATURES

- Options :-
  10mm lead spread - add G after part no.
  Surface mount - add SM after part no.
  Tape&reel - add SMT&R after part no.
- High Current Transfer Ratio (50% min)
- High Isolation Voltage ($5.3kV_{RMS}$,$7.5kV_{PK}$)
- High BV_{CEO} (55Vmin)
- All electrical parameters 100% tested
- Custom electrical selections available

APPLICATIONS

- Computer terminals
- Industrial systems controllers
- Measuring instruments
- Signal transmission between systems of different potentials and impedances

TLP621

Dimensions in mm

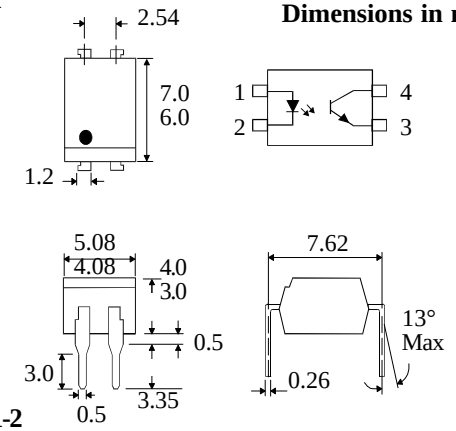

TLP621-2

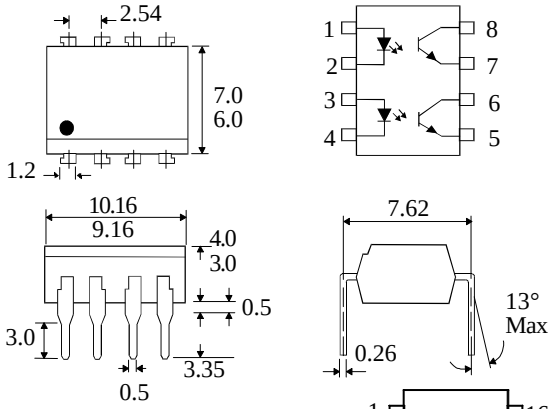

TLP621-4

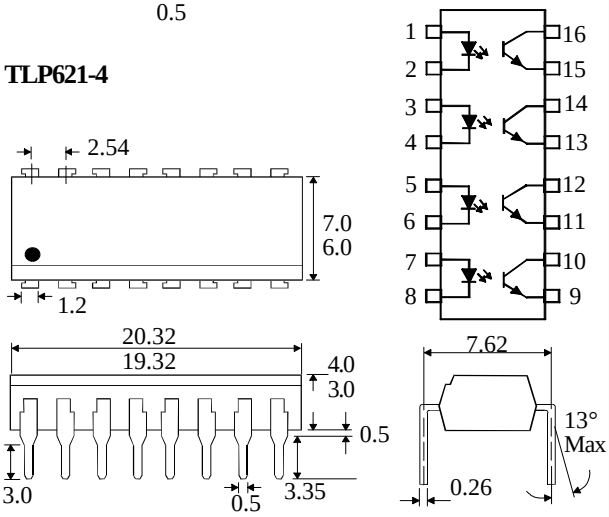

OPTION SM
SURFACE MOUNT

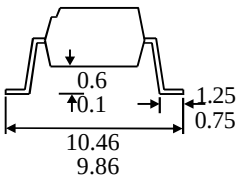

OPTION G

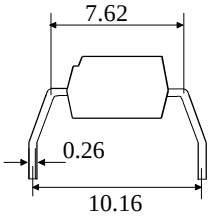

ISOCOM COMPONENTS LTD
Unit 25B, Park View Road West,
Park View Industrial Estate, Brenda Road
Hartlepool, Cleveland, TS25 1YD
Tel: (01429) 863609 Fax :(01429) 863581

ABSOLUTE MAXIMUM RATINGS
(25°C unless otherwise specified)

Storage Temperature	-55°C to + 125°C
Operating Temperature	-55°C to + 100°C
Lead Soldering Temperature (1/16 inch (1.6mm) from case for 10 secs)	260°C

INPUT DIODE

Forward Current	50mA
Reverse Voltage	5V
Power Dissipation	70mW

OUTPUT TRANSISTOR

Collector-emitter Voltage BV_{CEO}	55V
Emitter-collector Voltage BV_{ECO}	6V
Power Dissipation	150mW

POWER DISSIPATION

Total Power Dissipation (derate linearly 2.67mW/°C above 25°C)	200mW

ELECTRICAL CHARACTERISTICS (T_A = 25°C Unless otherwise noted)

PARAMETER		MIN	TYP	MAX	UNITS	TEST CONDITION
Input	Forward Voltage (V_F)	1.0	1.15	1.3	V	I_F = 10mA
	Reverse Voltage (V_R)	5			V	I_R = 10µA
	Reverse Current (I_R)			10	µA	V_R = 5V
Output	Collector-emitter Breakdown (BV_{CEO}) (Note 2)	55			V	I_C = 0.5mA
	Emitter-collector Breakdown (BV_{ECO})	6			V	I_E = 100µA
	Collector-emitter Dark Current (I_{CEO})			100	nA	V_{CE} = 24V
Coupled	Current Transfer Ratio (CTR) (Note 2)					
	TLP621, TLP621-2, TLP621-4	50		600	%	5mA I_F, 5V V_{CE}
	CTR selection available GB	100		600	%	
	BL	200		600	%	
	GB	30			%	1mA I_F, 0.4V V_{CE}
	Collector-emitter Saturation Voltage $V_{CE\ (SAT)}$			0.4	V	8mA I_F, 2.4mA I_C
	GB			0.4	V	1mA I_F, 0.2mA I_C
	Input to Output Isolation Voltage V_{ISO}	5300			V_{RMS}	See note 1
		7500			V_{PK}	See note 1
	Input-output Isolation Resistance R_{ISO}	$5x10^{10}$			Ω	V_{IO} = 500V (note 1)
	Rise Time tr		2		µs	V_{CC} =10V ,
	Fall Time tf		3		µs	I_C = 2mA, R_L = 100Ω
	Turn-on Time ton		3		µs	
	Turn-off Time toff		3		µs	

Note 1 Measured with input leads shorted together and output leads shorted together.
Note 2 Special Selections are available on request. Please consult the factory.

Collector Power Dissipation vs. Ambient Temperature

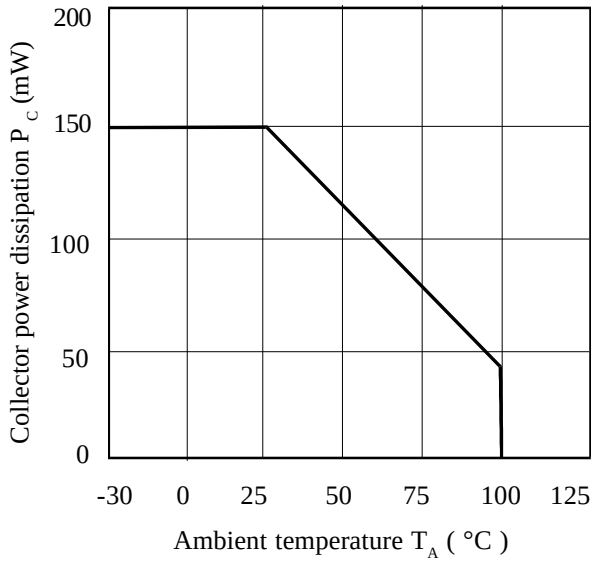

Collector Current vs. Low Collector-emitter Voltage

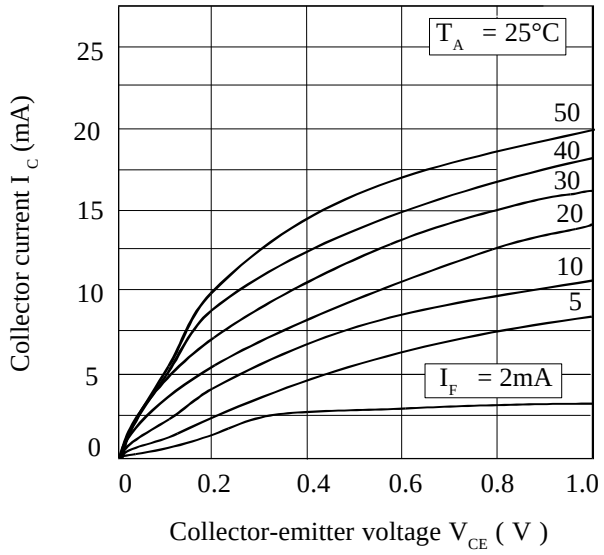

Forward Current vs. Ambient Temperature

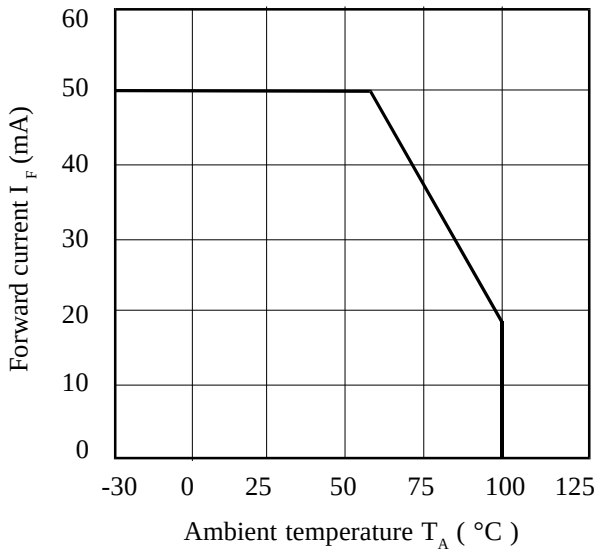

Collector Current vs. Collector-emitter Voltage

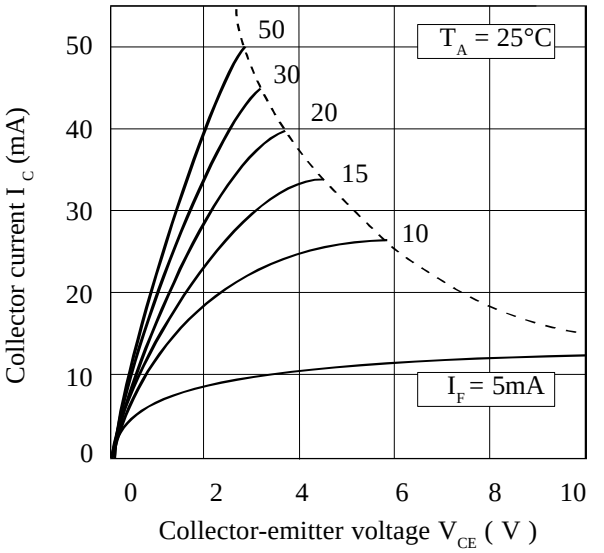

Collector-emitter Saturation Voltage vs. Ambient Temperature

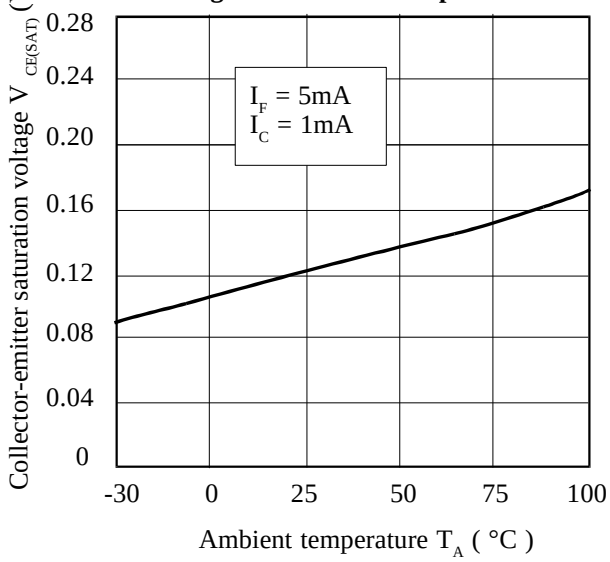
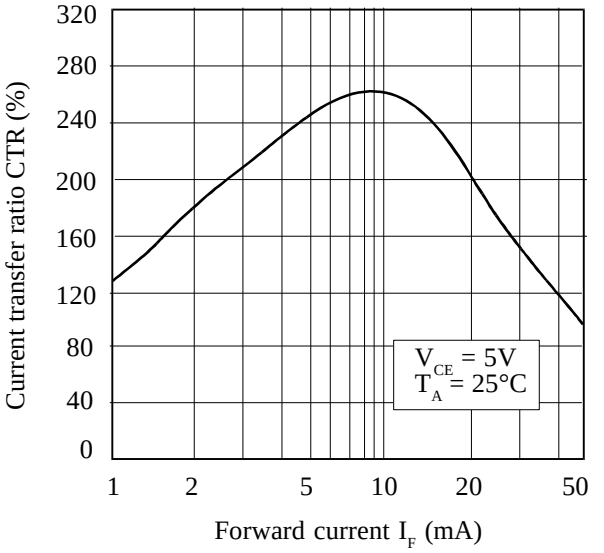
Current Transfer Ratio vs. Forward Current