TOSHIBA Photocoupler Photo Relay

TLP599A

Telecommunication

Data Acquisition

Measurement Instrumentation

Unit in mm

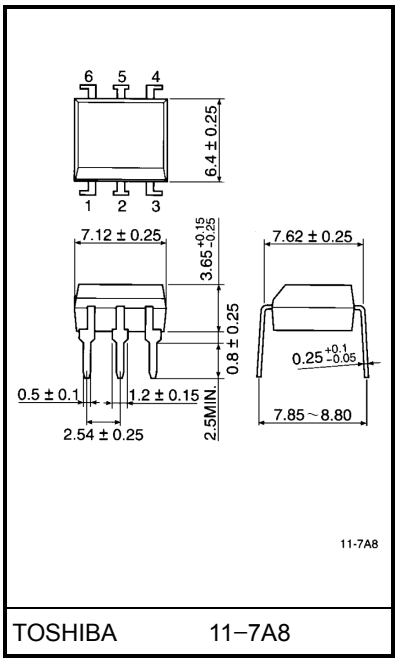

TOSHIBA 11−7A8

Weight: 0.4 g

The TOSHIBA TLP599A consists of a gallium arsenide infrared emitting diode optically coupled to a photo−MOS FET in a six lead plastic DIP package (DIP6).
The TLP599A is a bi−directional switch which can replace mechanical relays in many applications.

- Peak off−state voltage: 60V (min.)
- On−state current: 300mA (max.) (A connection)
- On−state resistance: 2Ω (max.) (A connection)
- Insulation Thickness: 0.4 mm (max.)
- Isolation voltage: 2500Vrms (min.)
- UL recognized: UL1577, file no. E67349
- Trigger LED current (Ta = 25°C)

Classification (Note 1)	Trigger LED Current (mA) @I_{ON} = 300mA		Marking Of Classification
	Min.	Max.	
(IFT2)	—	2	T2
Standard	—	5	T2, blank

(Note 1): Application type name for certification test, please use standard product type name, i.e.

TLP599A (IFT2) : TLP599A

Pin Configuration (top view)

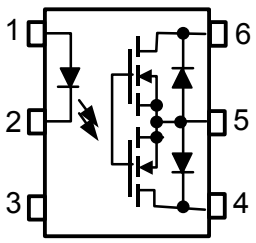

1. : Anode
2. : Cathode
3. : NC
4. : Drain D1
5. : Source
6. : Drain D2

Schematic

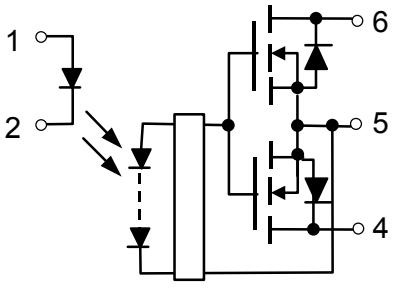

Maximum Ratings (Ta = 25°C)

Characteristic			Symbol	Rating	Unit
LED	Forward current		I_F	50	mA
	Forward current derating (Ta ≥ 25°C)		ΔI_F / °C	−0.5	mA / °C
	Peak forward current (100 μs pulse, 100 pps)		I_{FP}	1	A
	Reverse voltage		V_R	5	V
Detecter	Junction temperature		T_j	125	°C
	Off−state output terminal voltage		V_{OFF}	60	V
	On−state RMS current	A connection	I_{ON}	300	mA
		B connection		450	
		C connection		600	
	On−state current derating (Ta ≥ 25°C)	A connection	ΔI_{ON} / °C	−3	mA / °C
		B connection		−4.5	
		C connection		−6	
	Junction temperature		T_j	125	°C
Storage temperature range			T_{stg}	−55~125	°C
Operating temperature range			T_{opr}	−40~85	°C
Lead soldering temperature (10 s)			T_{sol}	260	°C
Isolation voltage (AC, 1 min., R.H.≤ 60%) (Note 2)			BV_S	2500	Vrms

(Note 2) : Device considered a two−terminal device : Pins 1, 2 and 3 shorted together, and pins 4, 5 and 6 shorted together.

Recommended Operating Conditions

Characteristic	Symbol	Min.	Typ.	Max.	Unit
Supply voltage	V_{DD}	—	—	48	V
Forward current	I_F	7.5	15	25	mA
On−state current	I_{ON}	—	—	300	mA
Operating temperature	T_{opr}	−20	—	80	°C

Circuit Connections

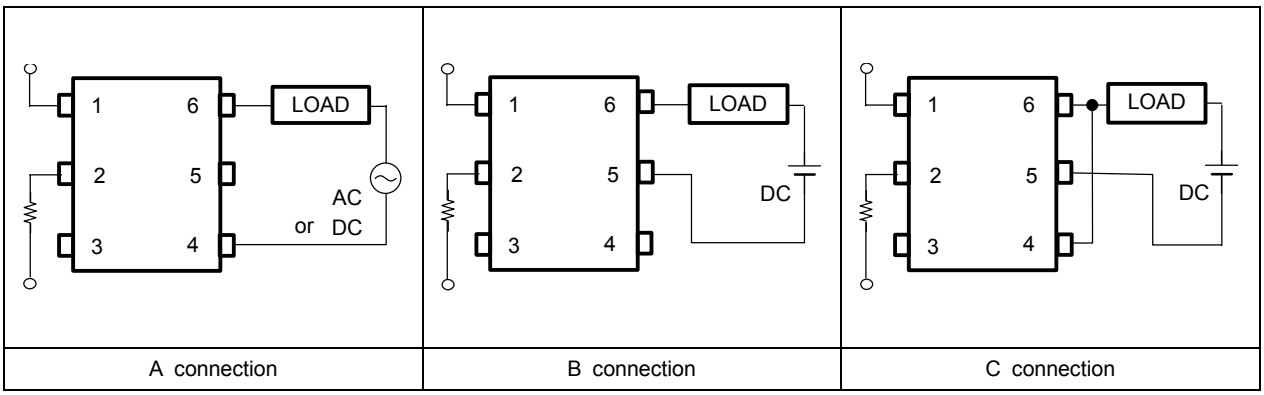

A connection | B connection | C connection

Individual Electrical Characteristics (Ta = 25°C)

Characteristic		Symbol	Test Condition	Min.	Typ.	Max.	Unit
LED	Forward voltage	V_F	I_F = 10 mA	1.0	1.15	1.3	V
	Reverse current	I_R	V_R = 5 V	—	—	10	μA
	Capacitance	C_T	V = 0, f = 1 MHz	—	30	—	pF
Detector	Off−state current	I_{OFF}	V_{OFF} = 60 V	—	—	1	μA
	Capacitance	C_{OFF}	V = 0, f = 1 MHz	—	—	—	pF

Coupled Electrical Characteristics (Ta = 25°C)

Characteristic		Symbol	Test Condition	Min.	Typ.	Max.	Unit
Trigger LED current		I_{FT}	I_{ON} = 300 mA	—	1	5	mA
On−state Resistance	A connection	R_{ON}	I_{ON} = 300 mA, I_F = 10 mA	—	1.4	2	Ω
	B connection		I_{ON} = 450 mA, I_F = 10 mA	—	0.7	1	
	C connection		I_{ON} = 600 mA, I_F = 10 mA	—	0.35	0.5	

Isolation Characteristics (Ta = 25°C)

Characteristic	Symbol	Test Condition	Min.	Typ.	Max.	Unit
Capacitance input to output	C_S	V_S = 0, f = 1 MHz	—	0.8	—	pF
Isolation resistance	R_S	V_S = 500 V, R.H.≤ 60%	5×10^{10}	10^{14}	—	Ω
Isolation voltage	BV_S	AC, 1 minute	2500	—	—	Vrms
		AC, 1 second (in oil)	—	5000	—	
		DC, 1 minute (in oil)	—	5000	—	V_{dc}

Switching Characteristics (Ta = 25°C)

Characteristic	Symbol	Test Condition	Min.	Typ.	Max.	Unit
Turn−on time	t_{on}	R_L = 200Ω, V_{DD} = 20 V I_F = 10 mA	—	—	2	ms
Turn−off time	t_{off}		—	—	2	

Switching Time Test Circuit

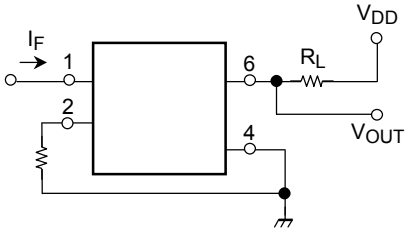

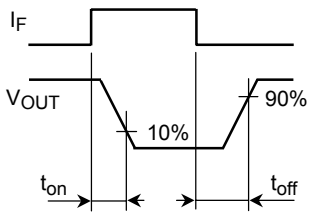

I_F– T_a

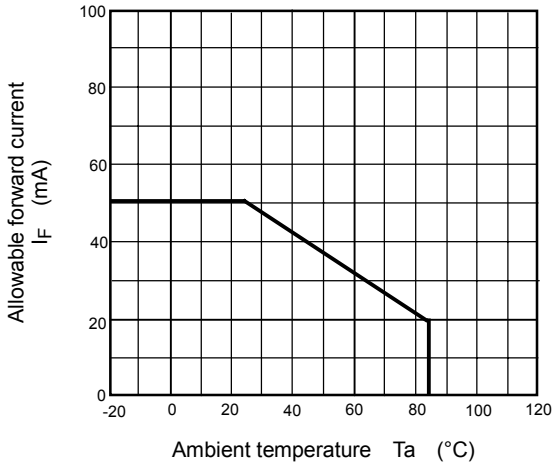

I_{ON} (RMS)– T_a

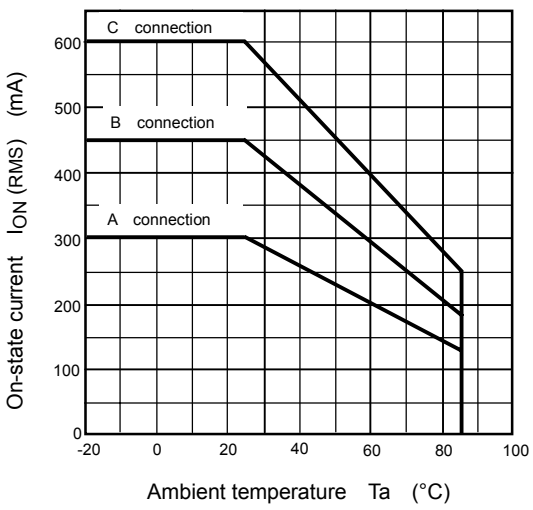

I_{FP} – D_R

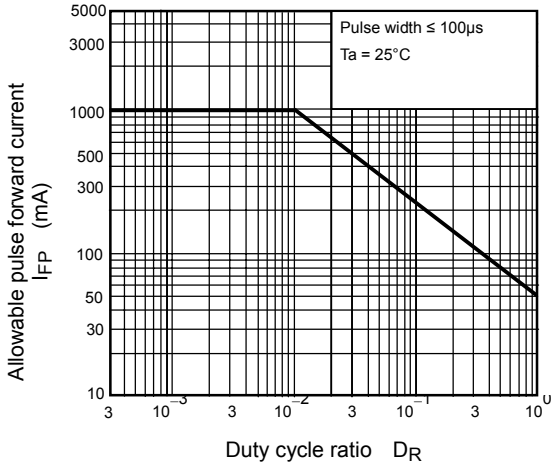

I_F – V_F

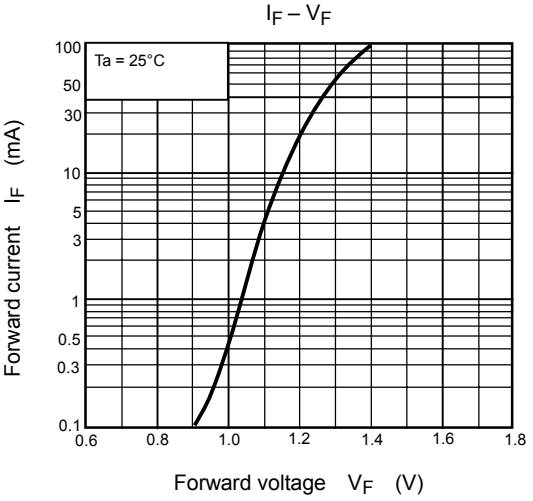

ΔV_F / ΔTa – I_F

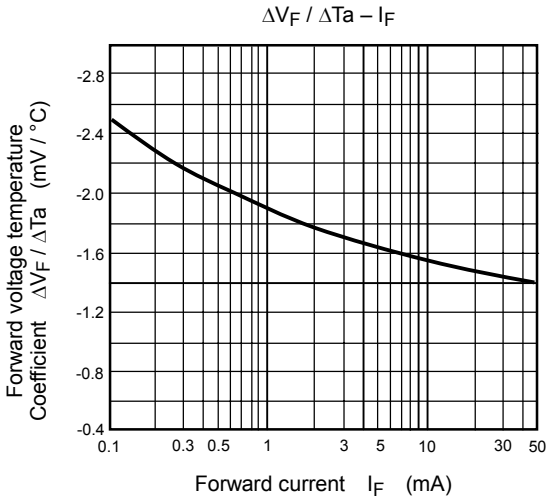

I_{FP} – V_{FP}

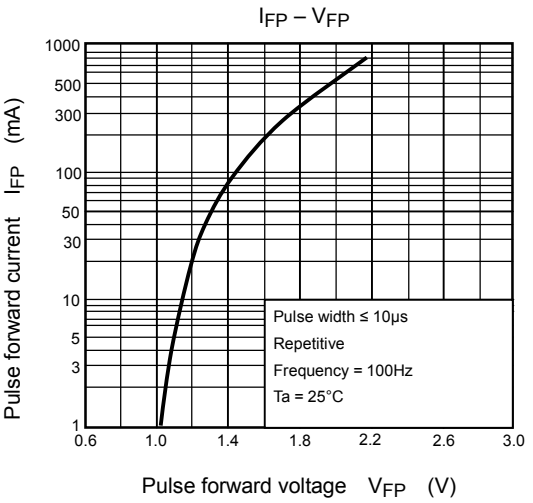

RESTRICTIONS ON PRODUCT USE

000707EBC

- TOSHIBA is continually working to improve the quality and reliability of its products. Nevertheless, semiconductor devices in general can malfunction or fail due to their inherent electrical sensitivity and vulnerability to physical stress. It is the responsibility of the buyer, when utilizing TOSHIBA products, to comply with the standards of safety in making a safe design for the entire system, and to avoid situations in which a malfunction or failure of such TOSHIBA products could cause loss of human life, bodily injury or damage to property.
  In developing your designs, please ensure that TOSHIBA products are used within specified operating ranges as set forth in the most recent TOSHIBA products specifications. Also, please keep in mind the precautions and conditions set forth in the “Handling Guide for Semiconductor Devices,” or “TOSHIBA Semiconductor Reliability Handbook” etc..
- The TOSHIBA products listed in this document are intended for usage in general electronics applications (computer, personal equipment, office equipment, measuring equipment, industrial robotics, domestic appliances, etc.). These TOSHIBA products are neither intended nor warranted for usage in equipment that requires extraordinarily high quality and/or reliability or a malfunction or failure of which may cause loss of human life or bodily injury (“Unintended Usage”). Unintended Usage include atomic energy control instruments, airplane or spaceship instruments, transportation instruments, traffic signal instruments, combustion control instruments, medical instruments, all types of safety devices, etc.. Unintended Usage of TOSHIBA products listed in this document shall be made at the customer’s own risk.
- Gallium arsenide (GaAs) is a substance used in the products described in this document. GaAs dust and fumes are toxic. Do not break, cut or pulverize the product, or use chemicals to dissolve them. When disposing of the products, follow the appropriate regulations. Do not dispose of the products with other industrial waste or with domestic garbage.
- The products described in this document are subject to the foreign exchange and foreign trade laws.
- The information contained herein is presented only as a guide for the applications of our products. No responsibility is assumed by TOSHIBA CORPORATION for any infringements of intellectual property or other rights of the third parties which may result from its use. No license is granted by implication or otherwise under any intellectual property or other rights of TOSHIBA CORPORATION or others.
- The information contained herein is subject to change without notice.