TOSHIBA PHOTOCOUPLER GaAlAs IRED & PHOTO-IC

TLP554

ISOLATED LINE RECEIVER
SIMPLEX/MULTIPLEX DATA TRANSMISSION
COMPUTER-PERIPHERAL INTERFACE
MICROPROCESSOR SYSTEM INTERFACES
DIGITAL ISOLATION FOR A/D,D/A CONVERSION

Unit: mm

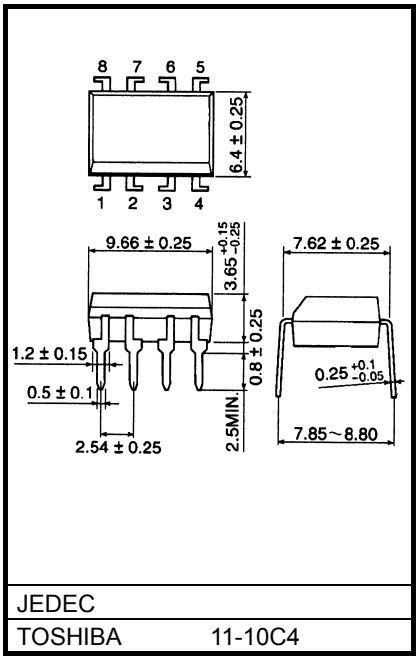

JEDEC	
TOSHIBA	11-10C4

Weight: 0.54 g

The TOSHIBA TLP554 a photocoupler which combines a GaAlAsIRED as the emitter and an integrated high gain, high speed photodetector.
The output of the detector circuit is an open collector, Schottky Clamped transistor.
A Faraday shield integrated on the photodetector chip reduces the effects of capacitive coupling between the input LED emitter and the high gain stages of the detector. This provides an effective common mode transient immunity of 1000V/us.

- Input Current Threshold : IF=5mA(Max.)
- Switching Speed : 10MBd(TYP,@NRZ)
- Common mode transient immunity : ±1000V/us(Min)
- Guaranteed Performance Over Temperature : 0~70°C
- Isolation Voltage : 2500Vrms(Min)
- UL Recognized :UL1577,File No.E67349

Truth Table (Positive Logic)

INPUT	ENABLE	OUTPUT
H	H	L
L	H	H
H	L	H
L	L	H

SCHEMATIC

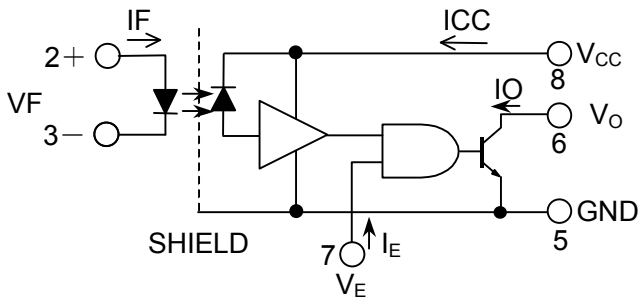

A 0.1μF bypass capacitor must be connected
Between pins 8 and 5.(See Note 1)

PIN CONFIGURATION (TOP VIEW)

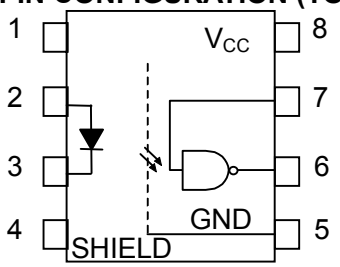

1:NC
2:ANODE
3:CATHODE
4:N.C.
5:GND
6:V_O(OUTPUT)
7:V_E(ENABLE)
8:V_{CC}

Recommended Operating Conditions

CHARACTERISTIC	SYMBOL	MIN.	TYP.	MAX.	UNIT
Low Level input Voltage	VFL	-3	0	1.0	V
High Level input current	IFH	6.3*	—	20	mA
Supply Voltage	VCC	4.5	5	5.5	V
High-Level Enable Voltage	VEH	2.0	—	VCC	V
Low-Level Enable Voltage	VEL	0	—	0.8	V
Fan Out(TTL Load)	N	—	—	8	—
Operating Temperature	Topr	0	—	70	°C

Note: Recommended operating conditions are given as a design guideline to obtain expected performance of the device. Additionally, each item is an independent guideline respectively. In developing designs using this product, please confirm specified characteristics shown in this document.

*6.3mA condition permits at least 20% CTR degradation

Initial switching threshold is 5.0mA or less.

Absolute Maximum Ratings (Ta = 25°C)

CHARACTERISTIC			SYMBOL	RATING	UNIT
LED	Forward Current		I_F	20	mA
	Reverse Voltage		V_R	5	V
DETECTOR	Output Current		IO	25	mA
	Output Voltage		VO	-0.5~7	V
	Supply Voltage	(Note 2)	VCC	7	V
	Enable Voltage	(Note 3)	VE	5.5	V
	Output Power Dissipation		PO	40	mW
Storage Temperature Range			T_{stg}	−55~125	°C
Operating Temperature Range			T_{opr}	−40~85	°C
Lead Soldering Temperature (10 s)		(Note 4)	T_{sol}	260	°C
Isolation Voltage (AC, 1 minute, R.H.≤ 60%)		(Note 5)	BV_S	2500	Vrms

Note: Using continuously under heavy loads (e.g. the application of high temperature/current/voltage and the significant change in temperature, etc.) may cause this product to decrease in the reliability significantly even if the operating conditions (i.e. operating temperature/current/voltage, etc.) are within the absolute maximum ratings and the operating ranges.
Please design the appropriate reliability upon reviewing the Toshiba Semiconductor Reliability Handbook (“Handling Precautions”/“Derating Concept and Methods”) and individual reliability data (i.e. reliability test report and estimated failure rate, etc).

(Note 1) The V_{CC} supply voltage to each TLP554 isolator must be bypassed by a 0.1μF capacitor or larger.This can be either a ceramic or solid tantalum capacitor with good high frequency characteristic and should be connected as close as possible to the package V_{CC} and GND pins each device.

(Note 2) 1 Minute Maximum.

(Note 3) Not to exceed VCC by more than 500mV.

(Note 4) 2mm below seating plane.

(Note 5) Device considered a two-terminal device :Pins 1,2,3 and 4 shorted together,and Pins 5, 6,7 and 8 shorted together.

Electrical Characteristics (Ta = 0~70°C , VCC=4.5~5.5V , VFL≤1.0V)

CHARACTERISTIC		SYMBOL	TEST CONDITION		MIN.	TYP.*	MAX.	UNIT
Forward Voltage		V_F	I_F = 10 mA , Ta=25°C			1.65	1.80	V
Temperature Coefficient of Forward Voltage		ΔVF/ΔTa	I_F = 10 mA ,		—	-2.0	—	mV/°C
Input Reverse Current		I_R	V_R=5V, Ta=25°C		—	—	10	μA
Input Capacitance		C_T	V = 0 , f = 1MHz , Ta=25°C		—	45	—	pF
High-Level Output Current		IOH	VF = 1.0V VO = 5.5V VE = 2.0V	Ta=0~70°C	—	10	250	μA
				Ta=25°C	—	0.5	10	
Low-Level Output Voltage		VOL	IF=5mA , VE=2.0V , IOL=13mA		—	0.4	0.6	V
High Level input current		IFH	IOL=13mA , VE=2.0V , VOL=0.6V		—	—	5	mA
Supply Current	High Level	ICCH	VCC=5.5V VE=0.5V	IF=0mA	—	7	15	mA
	Low Level	ICCL		IF=10mA	—	12	19	
Enable Current	High Level	IEH	VCC=5.5V	VE=2.0V	—	-1.0	—	mA
	Low Level	IEL		VE=0.5V	—	-1.6	-2.0	
Enable Voltage	High Level	VEH	— (Note 6)		2.0	—	—	V
	Low Level	VEL	—		—	—	0.8	
Capacitance (Input-Output)		CS	VS=0 , f=1MHz , Ta=25°C		—	0.6	—	pF
Resistance (Input-Output)		RS	VS=500V , Ta=25°C , R.H. ≤60%		5×10^{10}	10^{14}	—	Ω

(*)All typ.values are at Ta=25°C

(Note 6) No pull up resistor required as the device has an internal pull up resistor.

Switching Characteristics (Ta = 25°C , V_{CC}=5V)

CHARACTERISTIC		SYMBOL	TEST CIRCUIT	TEST CONDITION		MIN.	TYP.	MAX.	UNIT
Propagation Delay Time	L→H	tpLH	1	RL=350Ω	IF=7.5→0mA	—	60	120	ns
	H→L	tpHL		CL=15pF	IF=0→7.5mA	—	60	120	
Output Rise Time(10-90%)		tr		IF=7.5→0 / 0→7.5mA RL=350Ω, CL=15pF		—	30	—	ns
Output Fall Time(10-90%)		tf				—	30	—	
Enable Propagation Delay Time		tELH	2	RL=350Ω CL=15pF IF=7.5 mA	VE=0.5→3.0V	—	25	—	ns
		tEHL			VE=3.0→0.5V	—	25	—	
Common Mode Transient Immunity at Hight Level Outout		CM_H	3	VCM=400V RL=350Ω (Note 7)	IF=0mA VO(Min)=2.0V	1000	10000	—	V/μs
Common Mode Transient Immunity at Low Level Outout		CM_L			IF=7.5mA VO(Max)=0.8V	-1000	-10000	—	

(Note 7) CM_H·The maximum tolerable rate of rise of the common mode voltage to ensure the output will remain in the high state(i.e.,VOUT>2.0V)

CM_L·The maximum tolerable rate of fall of the common mode voltage to ensure the output will remain in the low output state(i.e.,VOUT<0.8V)

Measured in volts per microsecond(V/μs).

(Note 8) Maximum electrostatic discharge voltage for any pins:180V(C=200pF,R=0)

TEST CIRCUIT 1.

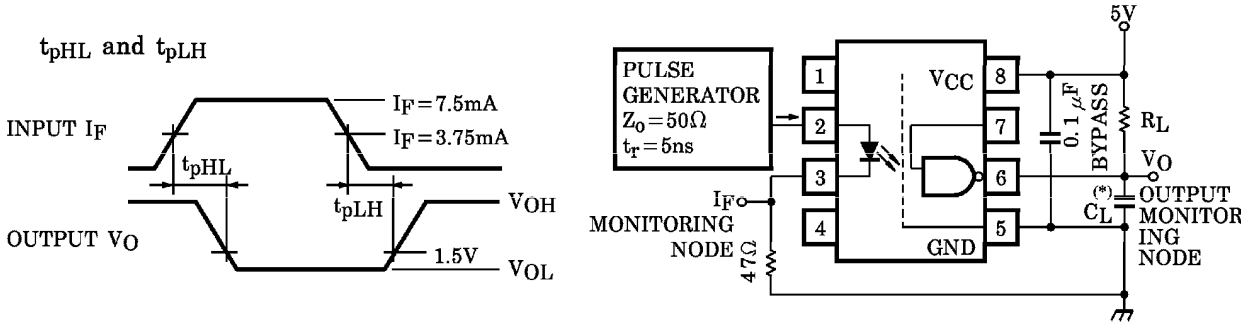

(*) C_L is approximately 15pF which includes probe and stray wiring capacitance.

TEST CIRCUIT 2.

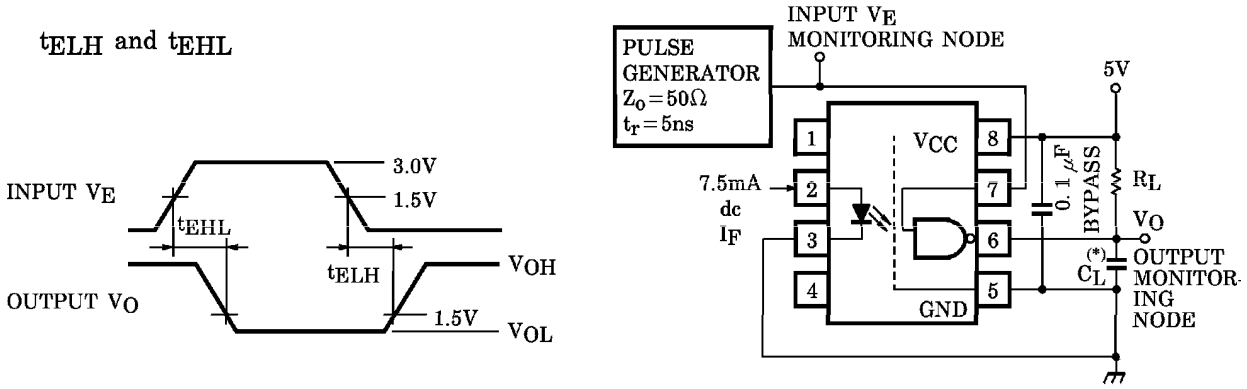

(*) C_L is approximately 15pF which includes probe and stray wiring capacitance.

TEST CIRCUIT 3.

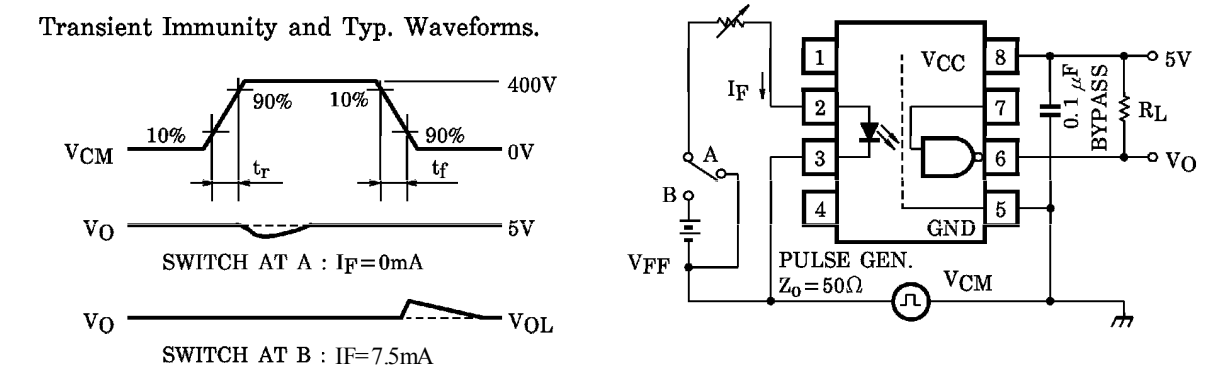

$I_F - V_F$

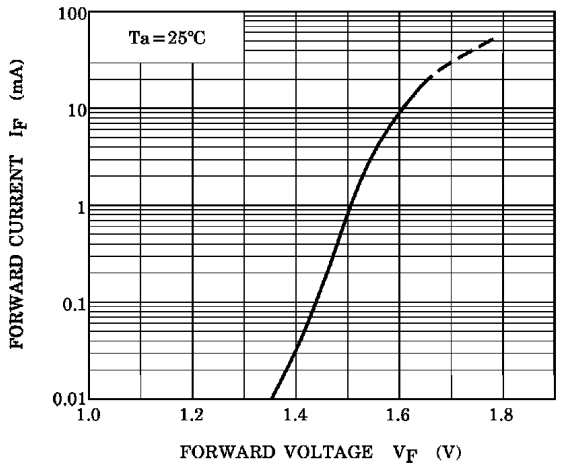

$\Delta V_F / \Delta Ta - I_F$

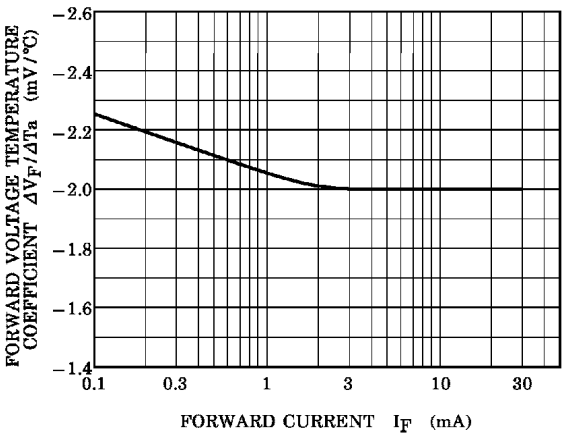

$V_O - I_F$

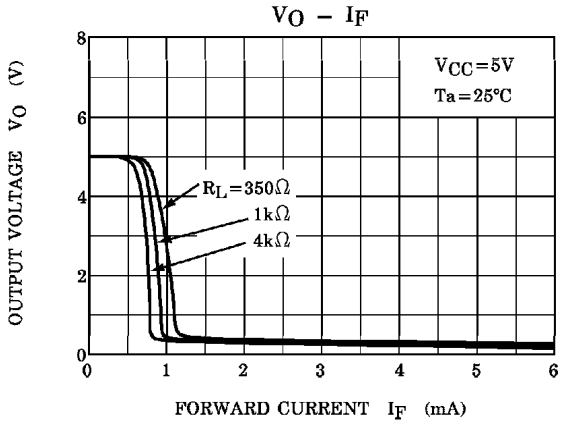

$I_{OH} - Ta$

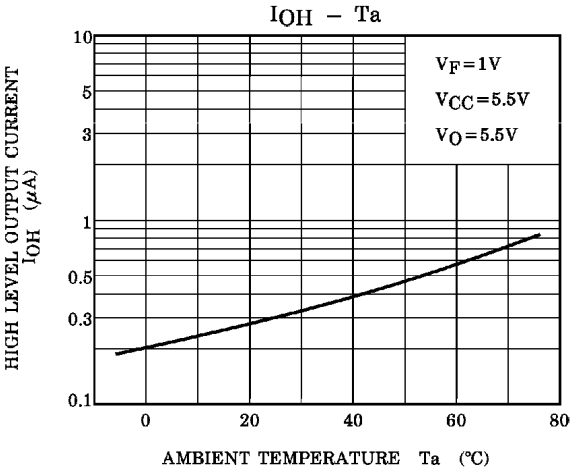

$V_O - I_F$

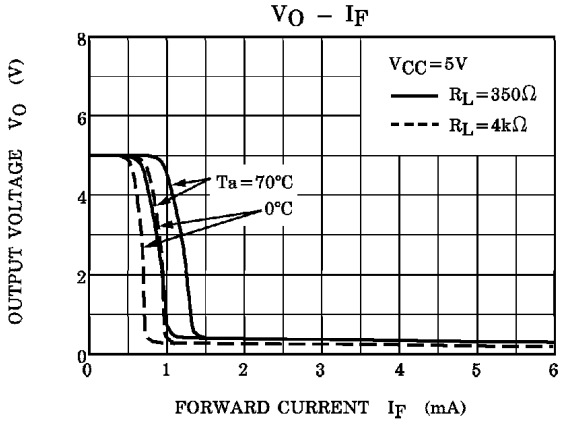

$V_{OL} - Ta$

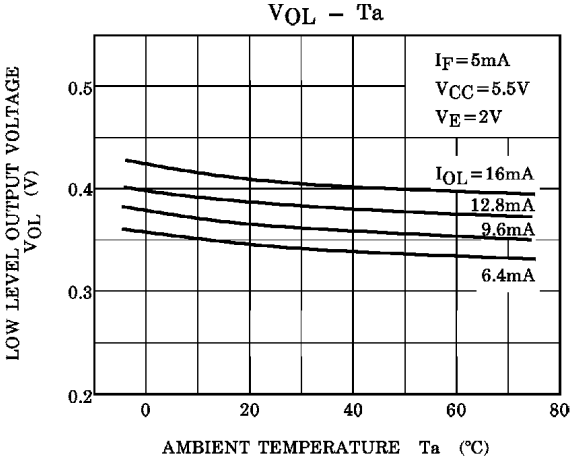

t_{pHL}, t_{pLH} – I_F

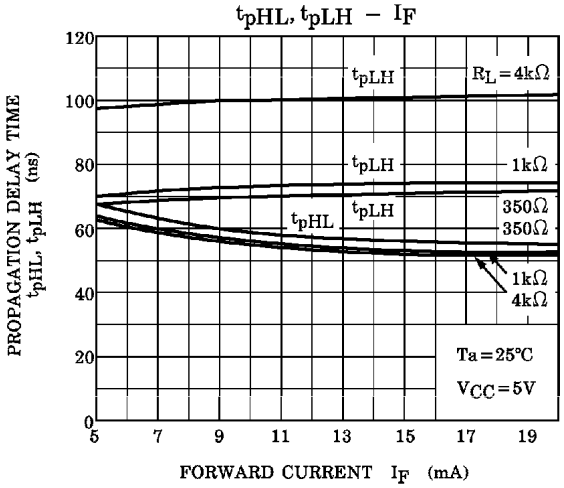

t_{pHL}, t_{pLH} – T_a

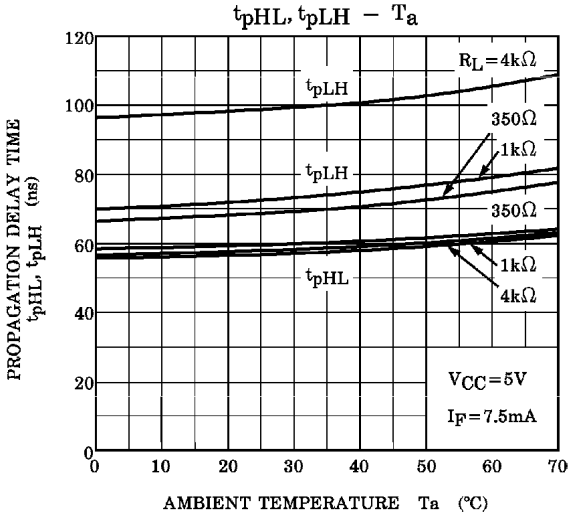

t_r, t_f – T_a

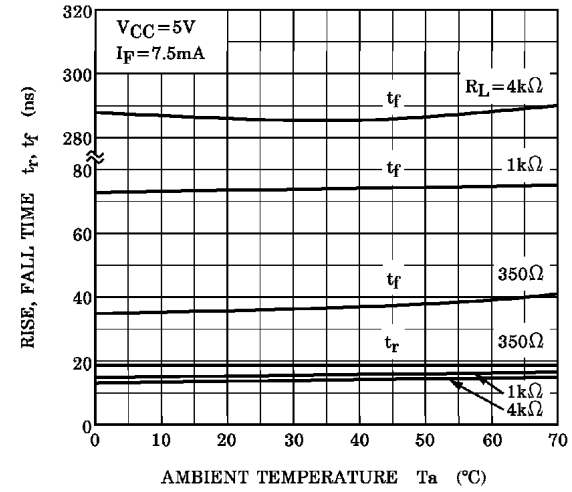

t_{EHL}, t_{ELH} – T_a

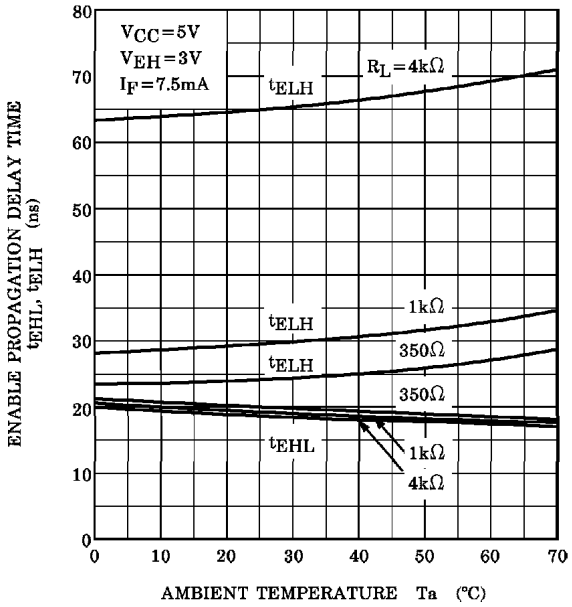

RESTRICTIONS ON PRODUCT USE

20070701-EN

- The information contained herein is subject to change without notice.
- TOSHIBA is continually working to improve the quality and reliability of its products. Nevertheless, semiconductor devices in general can malfunction or fail due to their inherent electrical sensitivity and vulnerability to physical stress. It is the responsibility of the buyer, when utilizing TOSHIBA products, to comply with the standards of safety in making a safe design for the entire system, and to avoid situations in which a malfunction or failure of such TOSHIBA products could cause loss of human life, bodily injury or damage to property.
  In developing your designs, please ensure that TOSHIBA products are used within specified operating ranges as set forth in the most recent TOSHIBA products specifications. Also, please keep in mind the precautions and conditions set forth in the “Handling Guide for Semiconductor Devices,” or “TOSHIBA Semiconductor Reliability Handbook” etc.
- The TOSHIBA products listed in this document are intended for usage in general electronics applications (computer, personal equipment, office equipment, measuring equipment, industrial robotics, domestic appliances, etc.).These TOSHIBA products are neither intended nor warranted for usage in equipment that requires extraordinarily high quality and/or reliability or a malfunction or failure of which may cause loss of human life or bodily injury (“Unintended Usage”). Unintended Usage include atomic energy control instruments, airplane or spaceship instruments, transportation instruments, traffic signal instruments, combustion control instruments, medical instruments, all types of safety devices, etc.. Unintended Usage of TOSHIBA products listed in his document shall be made at the customer’s own risk.
- The products described in this document shall not be used or embedded to any downstream products of which manufacture, use and/or sale are prohibited under any applicable laws and regulations.
- The information contained herein is presented only as a guide for the applications of our products. No responsibility is assumed by TOSHIBA for any infringements of patents or other rights of the third parties which may result from its use. No license is granted by implication or otherwise under any patents or other rights of TOSHIBA or the third parties.
- GaAs(Gallium Arsenide) is used in this product. The dust or vapor is harmful to the human body. Do not break, cut, crush or dissolve chemically.
- Please contact your sales representative for product-by-product details in this document regarding RoHS compatibility. Please use these products in this document in compliance with all applicable laws and regulations that regulate the inclusion or use of controlled substances. Toshiba assumes no liability for damage or losses occurring as a result of noncompliance with applicable laws and regulations.