TOSHIBA Photocoupler Photorelay

TLP176GA

PBX

Telecommunication

Modem・FAX Cards, Modems In PC

Measurement Instrumentation

Unit: mm

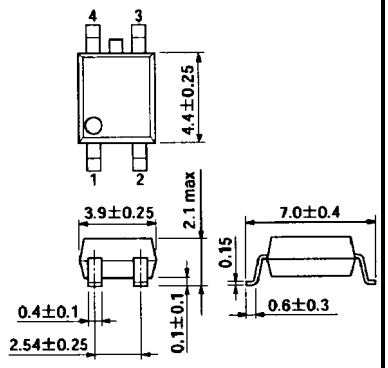

JEDEC	—
JEITA	—
TOSHIBA	11-5H1

Weight: 0.1 g (typ.)

The TOSHIBA TLP176GA consists of an aluminum gallium arsenide infrared emitting diode optically coupled to a photo-MOSFET in a SOP, which is suitable for surface mount assembly.

The TLP176GA is suitable for the modem applications which require space savings.

- 4 pin SOP (2.54SOP4): 2.1 mm high, 2.54 mm pitch
- 1-form-A
- Peak off-state voltage: 400 V (min)
- Trigger LED current: 3 mA (max)
- On-state current: 120 mA (max)
- On-state resistance: 35 Ω (max)
- Isolation voltage: 1500 Vrms (min)

Pin Configuration (top view)

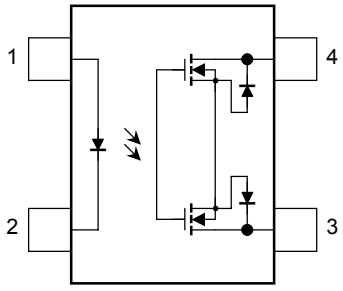

1: ANODE

2: CATHODE

3: DRAIN

4: DRAIN

Maximum Ratings (Ta = 25°C)

Characteristics		Symbol	Rating	Unit
LED	Forward current	I_F	50	mA
	Forward current derating (Ta ≧ 25°C)	ΔI_F/°C	−0.5	mA/°C
	Peak forward current (100 μs pulse, 100 pps)	I_{FP}	1	A
	Reverse voltage	V_R	5	V
	Junction temperature	T_j	125	°C
Detector	Off-state output terminal voltage	V_{OFF}	400	V
	On-state current	I_{ON}	120	mA
	On-state current derating (Ta ≧ 25°C)	ΔI_{ON}/°C	−1.2	mA/°C
	Junction temperature	T_j	125	°C
Operating temperature range		T_{opr}	−40 to 85	°C
Storage temperature range		T_{stg}	−55 to 125	°C
Lead soldering temperature (10 s)		T_{sol}	260	°C
Isolation voltage (AC, 1 min, R.H. ≦ 60%) (Note 1)		BV_S	1500	Vrms

Note 1: Device considered a two-terminal device: LED side pins shorted together, and DETECTOR side pins shorted together.

Recommended Operating Conditions

Characteristics	Symbol	Min	Typ.	Max	Unit
Supply voltage	V_{DD}	—	—	320	V
Forward current	I_F	5	7.5	25	mA
On-state current	I_{ON}	—	—	120	mA
Operating temperature	T_{opr}	−20	—	65	°C

Individual Electrical Characteristics (Ta = 25°C)

Characteristics		Symbol	Test Condition	Min	Typ.	Max	Unit
LED	Forward voltage	V_F	I_F = 10 mA	1.0	1.15	1.3	V
	Reverse current	I_R	V_R = 5 V	—	—	10	μA
	Capacitance	C_T	V = 0, f = 1 MHz	—	30	—	pF
Detec-tor	Off-state current	I_{OFF}	V_{OFF} = 400 V	—	—	1	μA
	Capacitance	C_{OFF}	V = 0, f = 1 MHz	—	70	—	pF

Coupled Electrical Characteristics (Ta = 25°C)

Characteristics	Symbol	Test Condition	Min	Typ.	Max	Unit
Trigger LED current	I_{FT}	I_{ON} = 120 mA	—	1	3	mA
Return LED current	I_{FC}	I_{OFF} = 100 μA	0.1	—	—	mA
On-state resistance	R_{ON}	I_{ON} = 120 mA, I_F = 5 mA	—	17	35	Ω

Isolation Characteristics (Ta = 25°C)

Characteristics	Symbol	Test Condition	Min	Typ.	Max	Unit
Capacitance input to output	C_S	V_S = 0, f = 1 MHz	—	0.8	—	pF
Isolation resistance	R_S	V_S = 500 V, R.H. ≦ 60%	5×10^{10}	10^{14}	—	Ω
Isolation voltage	BV_S	AC, 1 min	1500	—	—	Vrms
		AC, 1 s, in oil	—	3000	—	
		DC, 1 min, in oil	—	3000	—	Vdc

Switching Characteristics (Ta = 25°C)

Characteristics	Symbol	Test Condition	Min	Typ.	Max	Unit
Turn-on time	t_{ON}	R_L = 200 Ω (Note 2)	—	0.3	1	ms
Turn-off time	t_{OFF}	V_{DD} = 20 V, I_F = 5 mA	—	0.1	1	ms

Note 2: Switching time test circuit

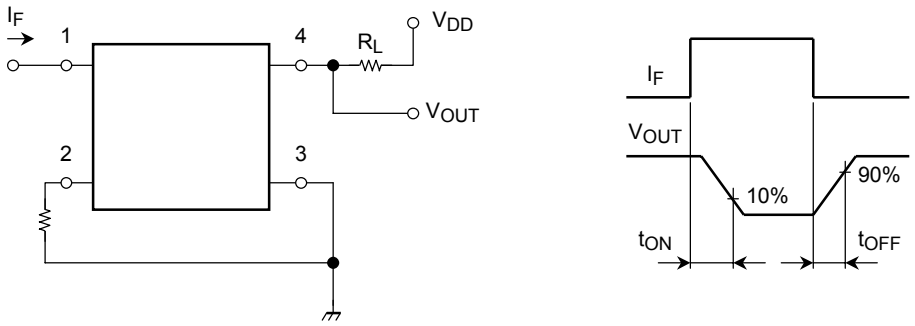

I_F – Ta

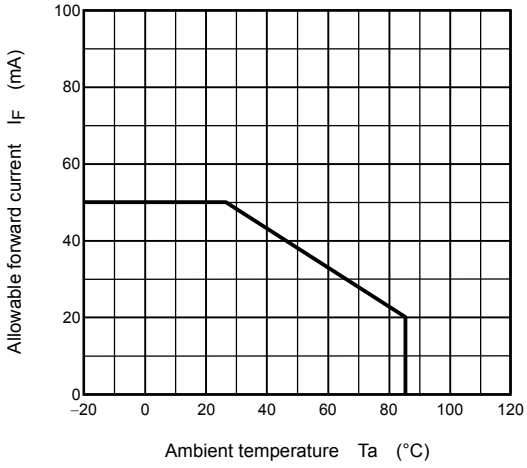

I_{ON} – Ta

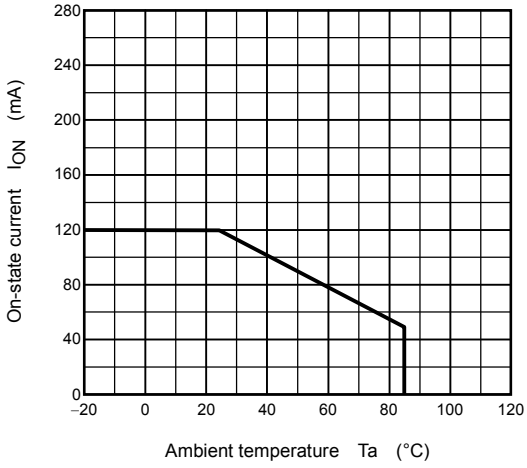

I_F – V_F

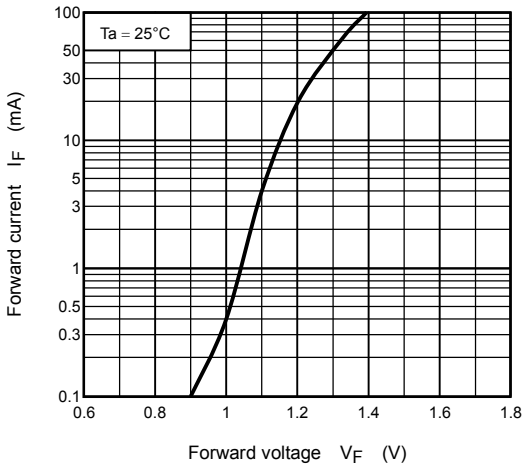

I_{ON} – V_{ON}

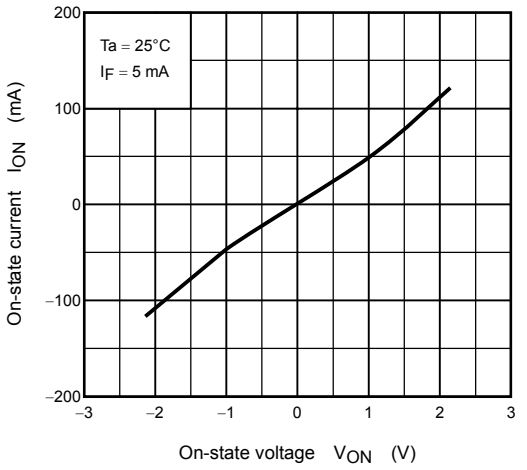

R_{ON} – Ta

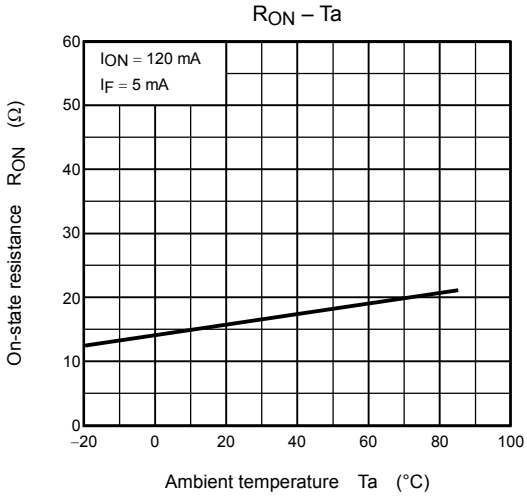

I_{FT} – Ta

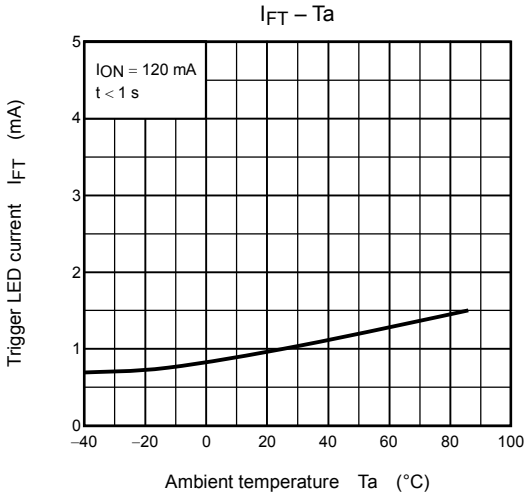

t_{ON}, t_{OFF} – I_F

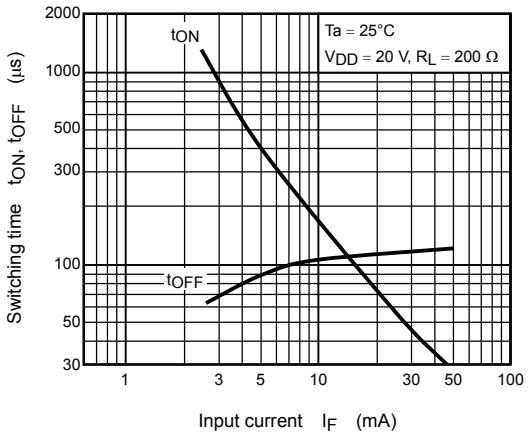

t_{ON}, t_{OFF} – Ta

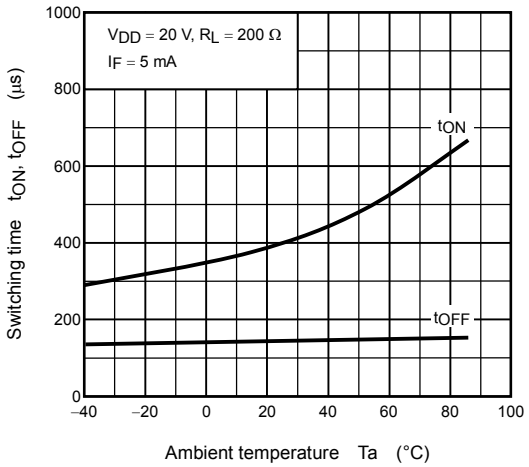

I_{OFF} – Ta

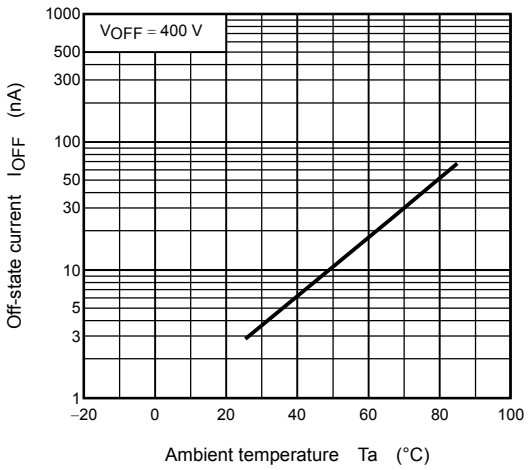

RESTRICTIONS ON PRODUCT USE

000707EBC

- TOSHIBA is continually working to improve the quality and reliability of its products. Nevertheless, semiconductor devices in general can malfunction or fail due to their inherent electrical sensitivity and vulnerability to physical stress. It is the responsibility of the buyer, when utilizing TOSHIBA products, to comply with the standards of safety in making a safe design for the entire system, and to avoid situations in which a malfunction or failure of such TOSHIBA products could cause loss of human life, bodily injury or damage to property.
  In developing your designs, please ensure that TOSHIBA products are used within specified operating ranges as set forth in the most recent TOSHIBA products specifications. Also, please keep in mind the precautions and conditions set forth in the “Handling Guide for Semiconductor Devices,” or “TOSHIBA Semiconductor Reliability Handbook” etc..
- The TOSHIBA products listed in this document are intended for usage in general electronics applications (computer, personal equipment, office equipment, measuring equipment, industrial robotics, domestic appliances, etc.). These TOSHIBA products are neither intended nor warranted for usage in equipment that requires extraordinarily high quality and/or reliability or a malfunction or failure of which may cause loss of human life or bodily injury (“Unintended Usage”). Unintended Usage include atomic energy control instruments, airplane or spaceship instruments, transportation instruments, traffic signal instruments, combustion control instruments, medical instruments, all types of safety devices, etc.. Unintended Usage of TOSHIBA products listed in this document shall be made at the customer’s own risk.
- Gallium arsenide (GaAs) is a substance used in the products described in this document. GaAs dust and fumes are toxic. Do not break, cut or pulverize the product, or use chemicals to dissolve them. When disposing of the products, follow the appropriate regulations. Do not dispose of the products with other industrial waste or with domestic garbage.
- The products described in this document are subject to the foreign exchange and foreign trade laws.
- The information contained herein is presented only as a guide for the applications of our products. No responsibility is assumed by TOSHIBA CORPORATION for any infringements of intellectual property or other rights of the third parties which may result from its use. No license is granted by implication or otherwise under any intellectual property or other rights of TOSHIBA CORPORATION or others.
- The information contained herein is subject to change without notice.