Low Current SMD LED

Color	Type	Technology	Angle of Half Intensity ±φ
Yellow	TLMA3100	GaAsP on GaP	60°

Description

These new devices have been designed to meet the increasing demand for low current SMD LEDs.
The package of the TLMA3100 is the P–LCC–2 (equivalent to a size B tantalum capacitor).
It consists of a lead frame which is surrounded with a white thermoplast. The reflector inside this package is filled up with clear epoxy.

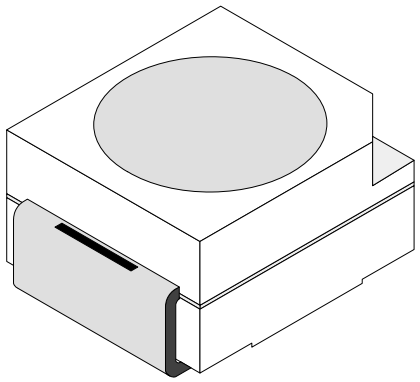

94 8553

Features

- SMD LED with exceptional brightness
- Compatible with automatic placement equipment
- EIA and ICE standard package
- Compatible with infrared, vapor phase and wave solder processes according to CECC
- Available in 8 mm tape
- Low profile package
- Non-diffused lens: excellent for coupling to light pipes and backlighting
- Very low power consumption
- Luminous intensity ratio in one packaging unit $I_{Vmax}/I_{Vmin} \leqq 2.0$

Applications

Automotive: backlighting in dashboards and switches
Telecommunication: indicator and backlighting in telephone and fax
Indicator and backlight for audio and video equipment
Indicator and backlight for battery driven equipment
Small indicator for outdoor applications
Indicator and backlight in office equipment
Flat backlight for LCDs, switches and symbols
General use

Absolute Maximum Ratings

T_{amb} = 25°C, unless otherwise specified

TLMA3100

Parameter	Test Conditions	Symbol	Value	Unit
Reverse voltage		V_R	6	V
DC forward current		I_F	7	mA
Surge forward current	$t_p \leq 10$ µs	I_{FSM}	0.5	A
Power dissipation	$T_{amb} \leq 90$°C	P_V	20	mW
Junction temperature		T_j	100	°C
Operating temperature range		T_{amb}	–40 to +100	°C
Storage temperature range		T_{stg}	–55 to +100	°C
Soldering temperature	t ≤ 5 s	T_{sd}	260	°C
Thermal resistance junction/ambient	mounted on PC board (pad size > 16 mm^2)	R_{thJA}	500	K/W

Optical and Electrical Characteristics

T_{amb} = 25°C, unless otherwise specified

Yellow (**TLMA3100**)

Parameter	Test Conditions	Type	Symbol	Min	Typ	Max	Unit
Luminous intensity	I_F = 2 mA		I_V	0.25	2.5		mcd
Dominant wavelength	I_F = 2 mA		λ_d	581		594	nm
Peak wavelength	I_F = 2 mA		λ_p		585		nm
Angle of half intensity	I_F = 2 mA		φ		±60		deg
Forward voltage	I_F = 2 mA		V_F		2.2	2.9	V
Reverse voltage	I_R = 10 µA		V_R	6	20		V
Junction capacitance	V_R = 0, f = 1 MHz		C_j		50		pF

Typical Characteristics (T_{amb} = 25°C, unless otherwise specified)

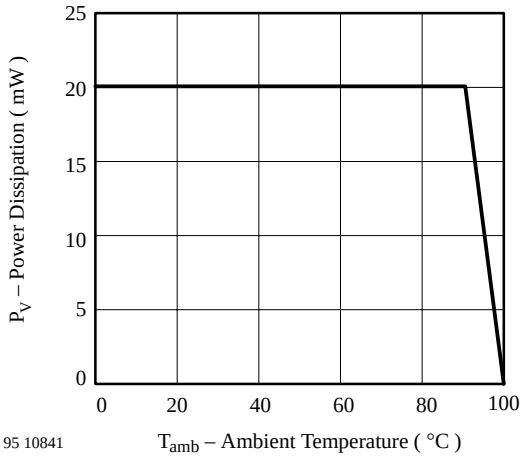

Figure 1 Power Dissipation vs. Ambient Temperature

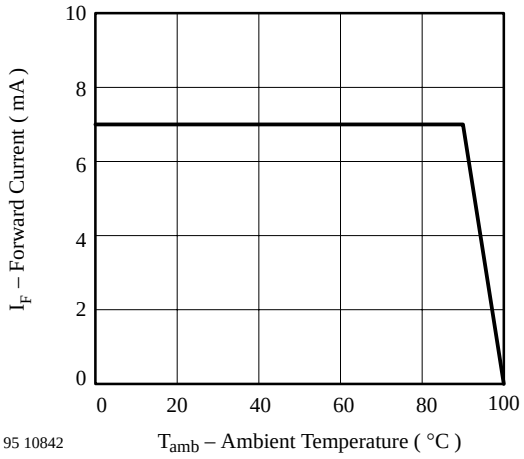

Figure 2 Forward Current vs. Ambient Temperature

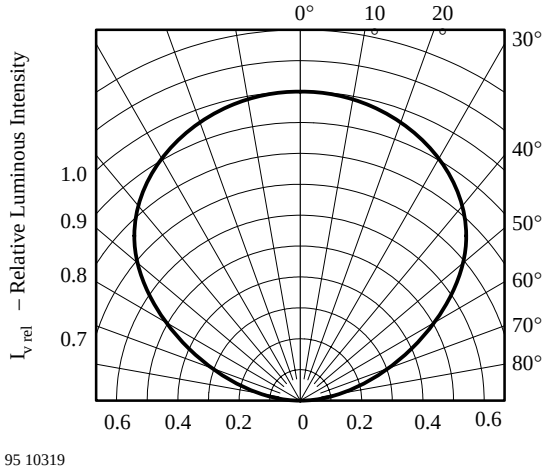

Figure 3 Rel. Luminous Intensity vs. Angular Displacement

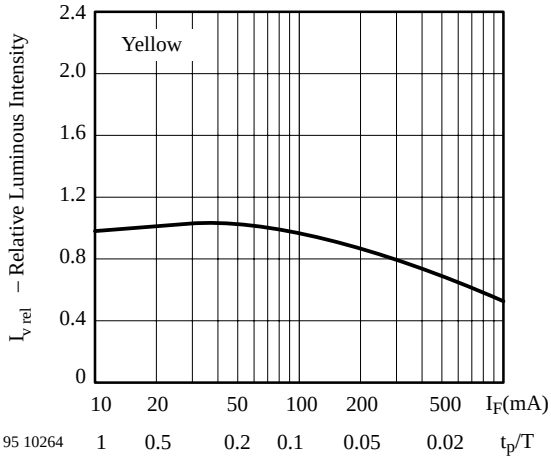

Figure 6 Rel. Lumin. Intensity vs. Forw. Current/Duty Cycle

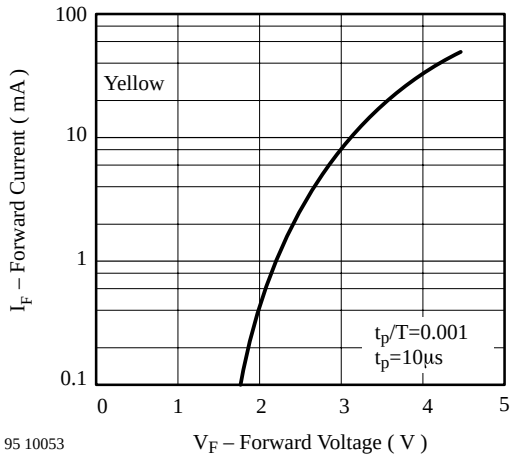

Figure 4 Forward Current vs. Forward Voltage

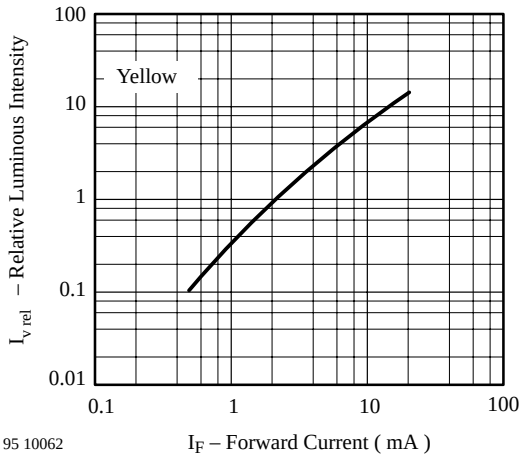

Figure 7 Relative Luminous Intensity vs. Forward Current

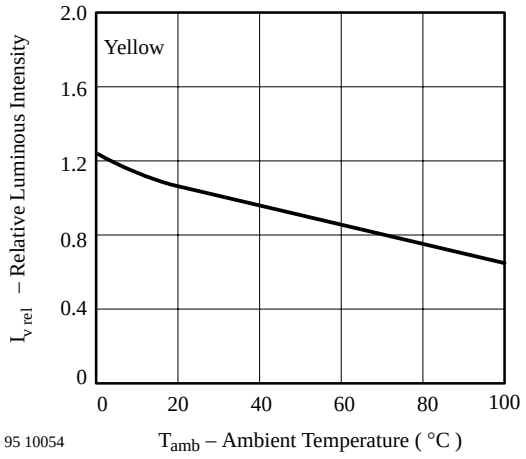

Figure 5 Rel. Luminous Intensity vs. Ambient Temperature

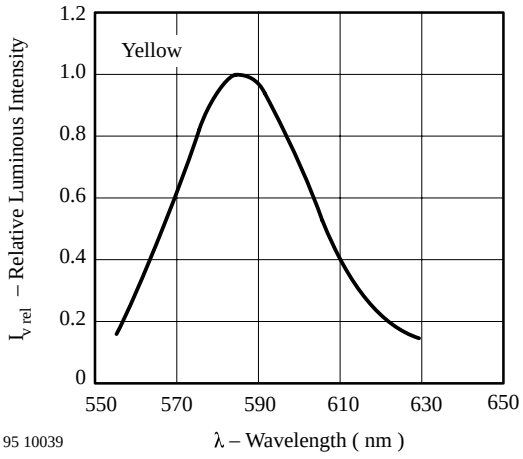

Figure 8 Relative Luminous Intensity vs. Wavelength

Dimensions in mm

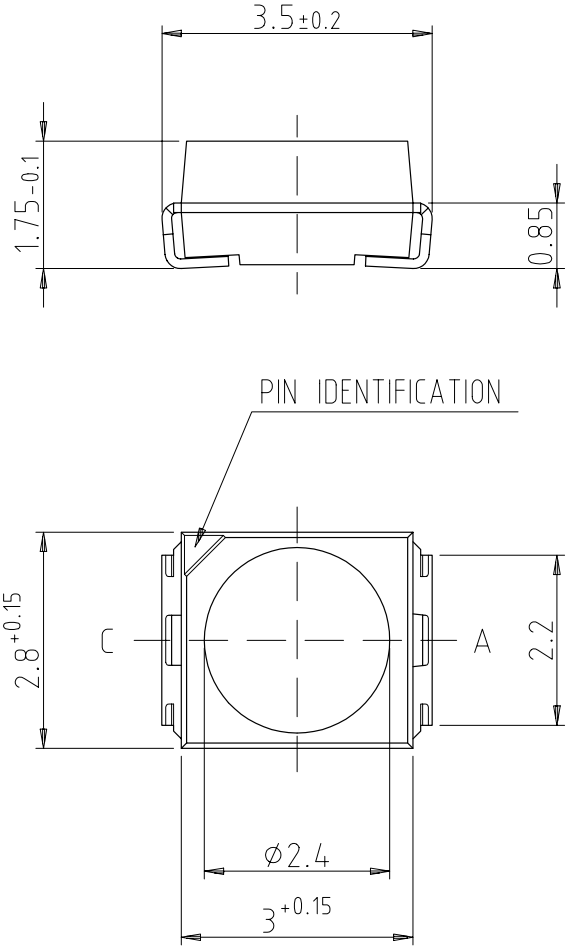

PCB Layout in mm

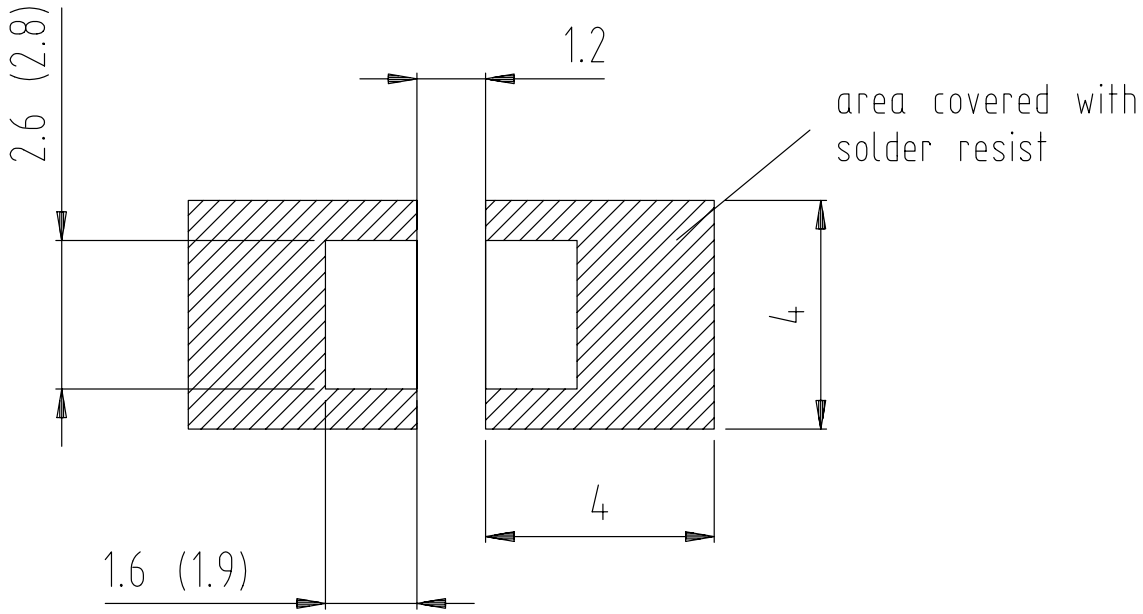

Dimensions: IR and Vaporphase
(Wave Soldering)

95 10966

Ozone Depleting Substances Policy Statement

It is the policy of **Vishay Semiconductor GmbH** to

1. Meet all present and future national and international statutory requirements.

2. Regularly and continuously improve the performance of our products, processes, distribution and operating systems with respect to their impact on the health and safety of our employees and the public, as well as their impact on the environment.

It is particular concern to control or eliminate releases of those substances into the atmosphere which are known as ozone depleting substances (ODSs).

The Montreal Protocol (1987) and its London Amendments (1990) intend to severely restrict the use of ODSs and forbid their use within the next ten years. Various national and international initiatives are pressing for an earlier ban on these substances.

Vishay Semiconductor GmbH has been able to use its policy of continuous improvements to eliminate the use of ODSs listed in the following documents.

1. Annex A, B and list of transitional substances of the Montreal Protocol and the London Amendments respectively

2. Class I and II ozone depleting substances in the Clean Air Act Amendments of 1990 by the Environmental Protection Agency (EPA) in the USA

3. Council Decision 88/540/EEC and 91/690/EEC Annex A, B and C (transitional substances) respectively.

Vishay Semiconductor GmbH can certify that our semiconductors are not manufactured with ozone depleting substances and do not contain such substances.

We reserve the right to make changes to improve technical design and may do so without further notice.
Parameters can vary in different applications. All operating parameters must be validated for each customer application by the customer. Should the buyer use Vishay-Telefunken products for any unintended or unauthorized application, the buyer shall indemnify Vishay-Telefunken against all claims, costs, damages, and expenses, arising out of, directly or indirectly, any claim of personal damage, injury or death associated with such unintended or unauthorized use.

Vishay Semiconductor GmbH, P.O.B. 3535, D-74025 Heilbronn, Germany
Telephone: 49 (0)7131 67 2831, Fax number: 49 (0)7131 67 2423