TLK111 Customer EVM

This user's guide details the design and operation of the evaluation module (EVM) for the TLK111.

Contents

1 TLK111 EVM Purpose and Content 1
1.1 EVM Use 2
2 Information and Specifications 2
2.1 Usage Setup and Configuration 2
2.2 Address Settings 2
2.3 TLK111CUSEVM Connections 2
3 TLK111CUSEVM Specification 3
3.1 Overview 3
3.2 Required Resources 3
3.3 Features 3
3.4 TLK111CUSEVM Block Diagram 4
3.5 PCB Physical Layout 5
3.6 EVM Schematics 6
3.7 Bill of Materials 12
4 Software 15

List of Figures

1 EVM Block Diagram 4
2 EVM Layout 5
3 TLK111CUSEVM Top Level Schematics 6
4 TLK111CUSEVM / TLK111 Schematics 7
5 TLK111CUSEVM 3.3V/1.5V LDO Schematics 8
6 TLK111CUSEVM / SOR Schematics 9
7 TLK111CUSEVM / MII Connector Schematics 10
8 TLK111CUSEVM / Magnetics Schematics 11

List of Tables

1 TLK111CUSEVM Connections 2
2 TLK111CUSEVM Aneg Modes Connections 2
3 Bill of Materials 12

1 TLK111 EVM Purpose and Content

The Industrial Ethernet TLK111CUSEVM provides Texas Instruments customers a platform to quickly design and market systems containing the TLK111 device. Customers are encouraged to copy EVM components to expedite their design process. The TLK111CUSEVM operates with only a single voltage (5V from the MII). All other voltages are internally produced.

The EVM kit contains:

- TLK111CUSEVM unit
- Printed copy of this user's guide
- TLK111CUSEVM schematic

Copyright © 2013, Texas Instruments Incorporated

1.1 EVM Use

The TLK111 supports an IEEE 802.3u 100BASE-FX Fiber Interface. This ability was not implemented in this customer EVM. For fiber performance evaluation, a new customer EVM is being developed.

2 Information and Specifications

This section contains the specifications of the TLK111CUSEVM card, as well as a description of the card's interfaces, connectors, jumpers, and LEDs.

2.1 Usage Setup and Configuration

Power for the TLK111CUSEVM is supplied via a MII connector.

- If 5V is supplied, the on-board voltage regulator, U1, converts 5V to 3.3V for the device.
- If 3.3V is supplied from the MII connector, assemble R59 and remove R56.
- Make sure the J2 jumper is installed in order to supply 3.3V to the magnetic CT.
- Make sure J1 jumper is installed and configured to MII or RMII.

2.2 Address Settings

The PMD address TLK111CUSEVM Physical Layer device is set by the following jumpers:

- J7: PHY ID [0]
- J6: PHY ID [1]
- J5: PHY ID [2]

The default board setting for the PHY address is 01h. The board may be set to any PHY address 00h - 07h by adding jumpers J5 - J7.

2.3 TLK111CUSEVM Connections

Table 1 describes the connections of the TLK111CUSEVM.

Table 1. TLK111CUSEVM Connections

Jumper	Name	Function
P1	MII male connector	MII interface
J1	MII or RMII selector	Select between MII mode or RMII mode
J14	RESET N	Reset the device
J2	Central tap voltage selector	Enable 3.3V supply to the central tap
U2	RJ45	RJ45 ethernet connector
J5 - J7	PHY ID[0:2]	Configure PHY ID address (default = addr 01h)
J15 (Not populated)	25M out	25M clock output
J10	RMII enable	Enable RMII (default = MII)
J8	CFG CROSSOVER	Disable AMDIX (default = AMDIX ON)
J3	CFG ANEG MODE	See description below
J4	AFG ANEG SPD 0	See description below
J5	AFG ANEG SPD 1	See description below

Table 2. TLK111CUSEVM Aneg Modes Connections

AN-EN	AN_1	AN_0	Forced Mode
0	0	0	10BT, Half duplex
0	0	1	10BT, Full duplex
0	1	0	100BT, Half duplex
0	1	1	100BT, Full duplex

Copyright © 2013, Texas Instruments Incorporated

Table 2. TLK111CUSEVM Aneg Modes Connections (continued)

AN-EN	AN_1	AN_0	Forced Mode
AN-EN	**AN_1**	**AN_0**	**Advertised Mode**
1	0	0	10BT, Half or Full duplex
1	0	1	100BT, Half or Full duplex
1	1	0	10BT, 100BT, Half duplex
1	1	1	10BT, 100BT, Full duplex

3 TLK111CUSEVM Specification

3.1 Overview

The TLK111CUSEVM platform from Texas Instruments allows a customer to evaluate the TLK111 device and demonstrate the advanced features described in the TLK111 datasheet.

The EVM supports 10/100 Base-T and is IEEE 802.3 standard compliant.

The TLK111CUSEVM operates with a single supply (5V or 3.3V) from the MII. All other voltages required for the TLK111 are internally generated in the device.

The TLK111CUSEVM is designed to work in industrial temperatures.

3.2 Required Resources

Any equipment that provides a standard IEEE 802.3, Clause 22 MII DTE interface, such as a SmartBits/Netcom box.

3.3 Features

The TLK111CUSEVM features include:

- Industrial temperature rating: (-40°C to 85°C)
- Industrial temperature external magnetics
- Control and status:
  - Configurable 8 PHY Addresses – 01h (default) or any other address between 00h - 07h using jumpers as describes in Table 1
  - 8 LEDs – 2 power, 6 status LEDs (speed, link, and active data)
- Strap options:
  - MII or RMII jumper (MII disable)
  - Resistor strapping options:
    - Configurable PHY addresses 08h - 31h
    - CFG_ANEG_MODE
    - CFG_ANEG_SPD_0,1
    - CFG_CROSSOVER
  - RESET_N jumper
- Connections for the following interfaces:
  - MII connector
  - RJ-45 connector
- Single-sided component placement
- On-board clock – crystal or oscillator dual footprint
- On-board power supplied by MII connector only, resistors to configure 5V or 3.3V operation

Copyright © 2013, Texas Instruments Incorporated

3.4 TLK111CUSEVM Block Diagram

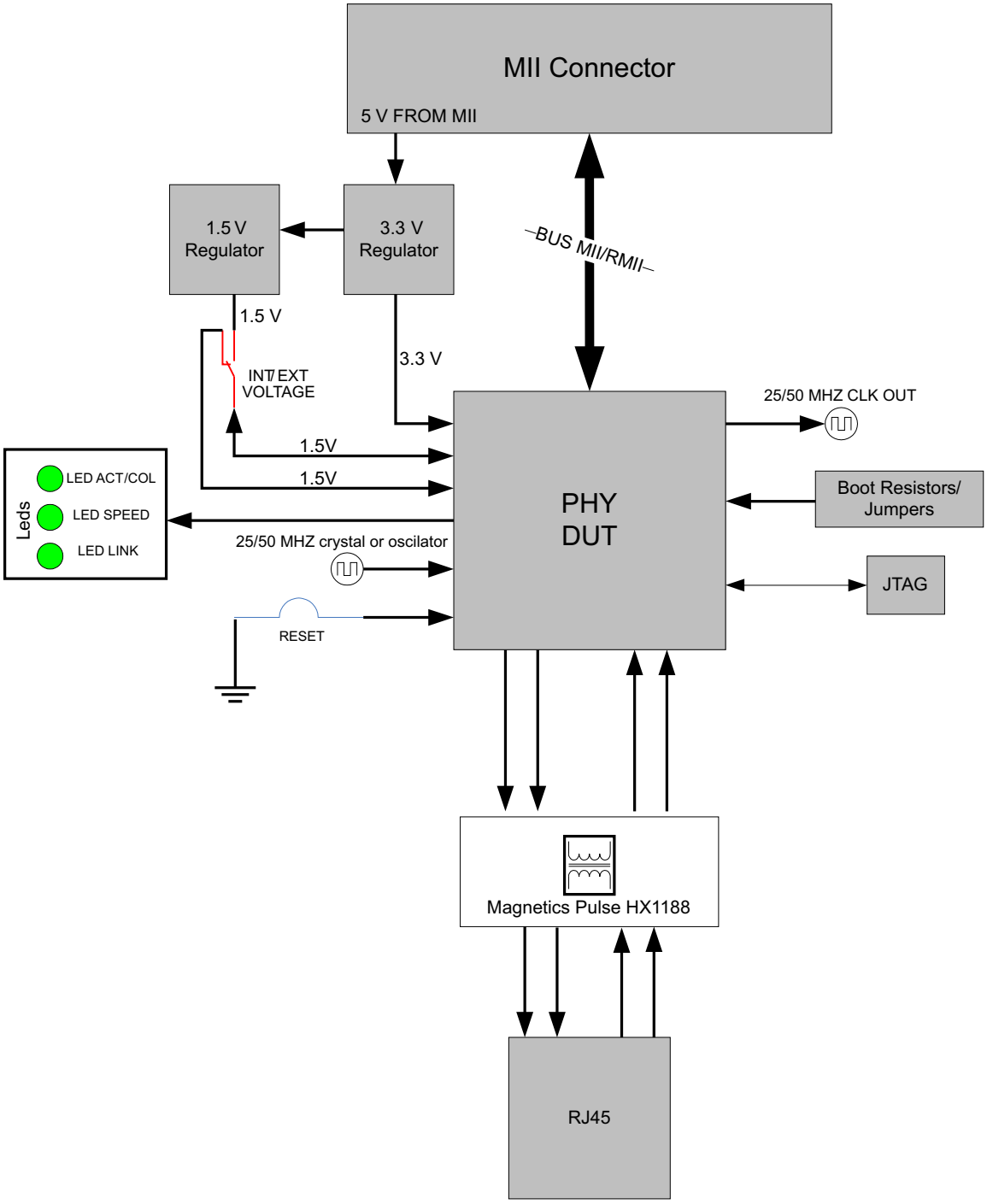

Figure 1. EVM Block Diagram

Copyright © 2013, Texas Instruments Incorporated

3.5 PCB Physical Layout

- FR4 material
- Trace impedance differential impedance 100 Ω, ±5%
- Uniform supply and ground planes
- 4 layers
- Combination of through-hole and surface mount technology

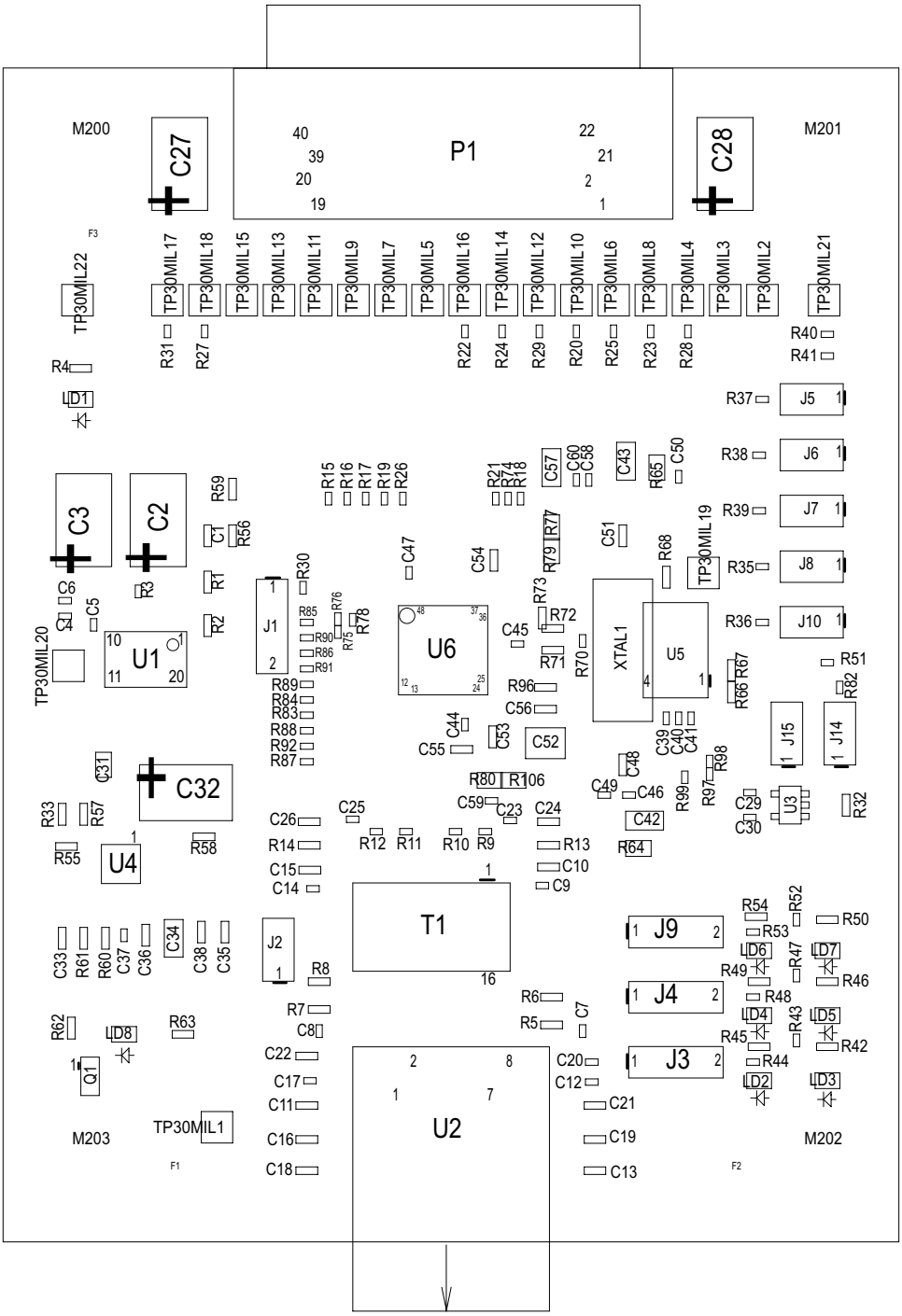

Figure 2. EVM Layout

Copyright © 2013, Texas Instruments Incorporated

3.6 EVM Schematics



Figure 3. TLK111CUSEVM Top Level Schematics

Copyright © 2013, Texas Instruments Incorporated

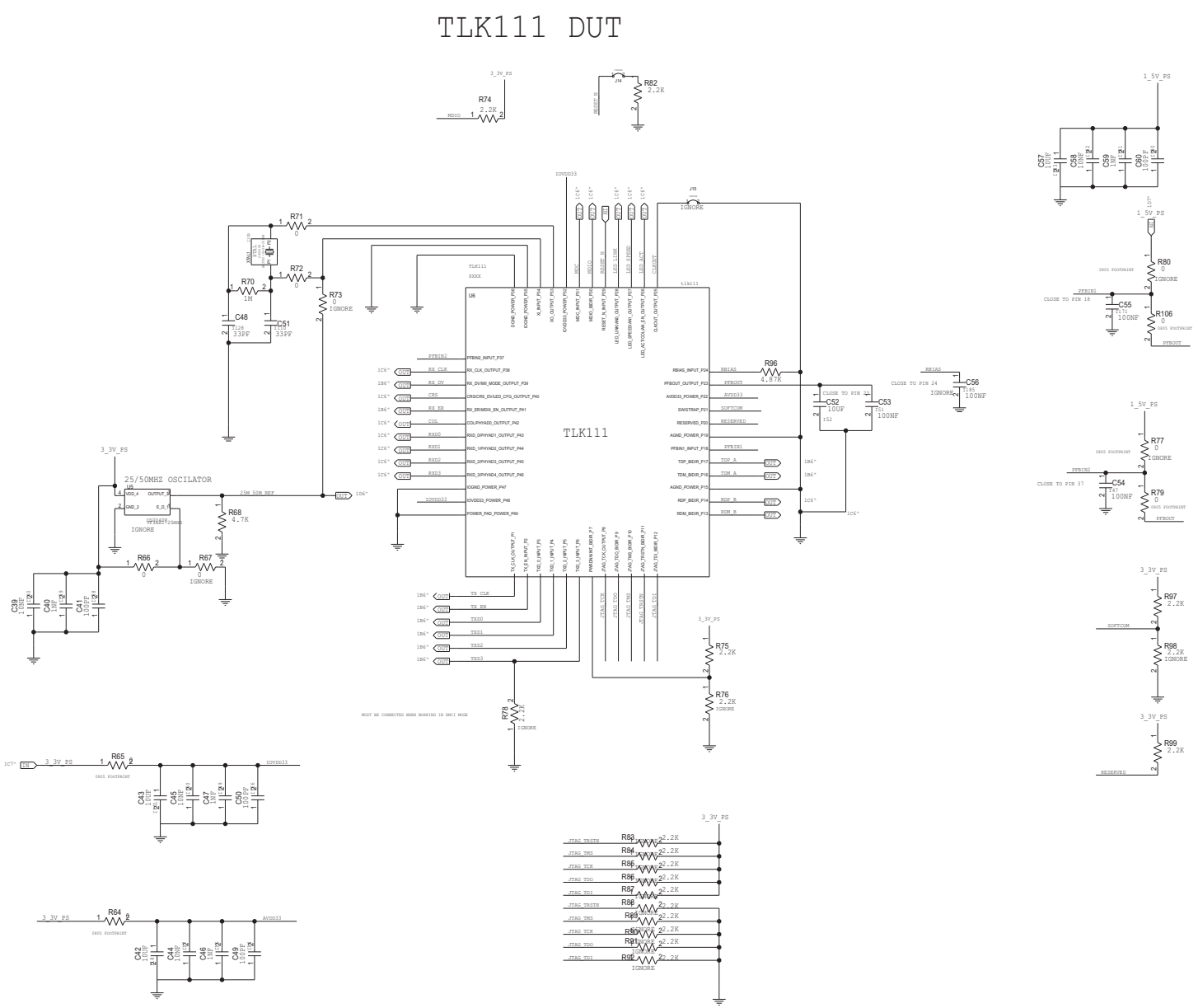

Figure 4. TLK111CUSEVM / TLK111 Schematics

Copyright © 2013, Texas Instruments Incorporated

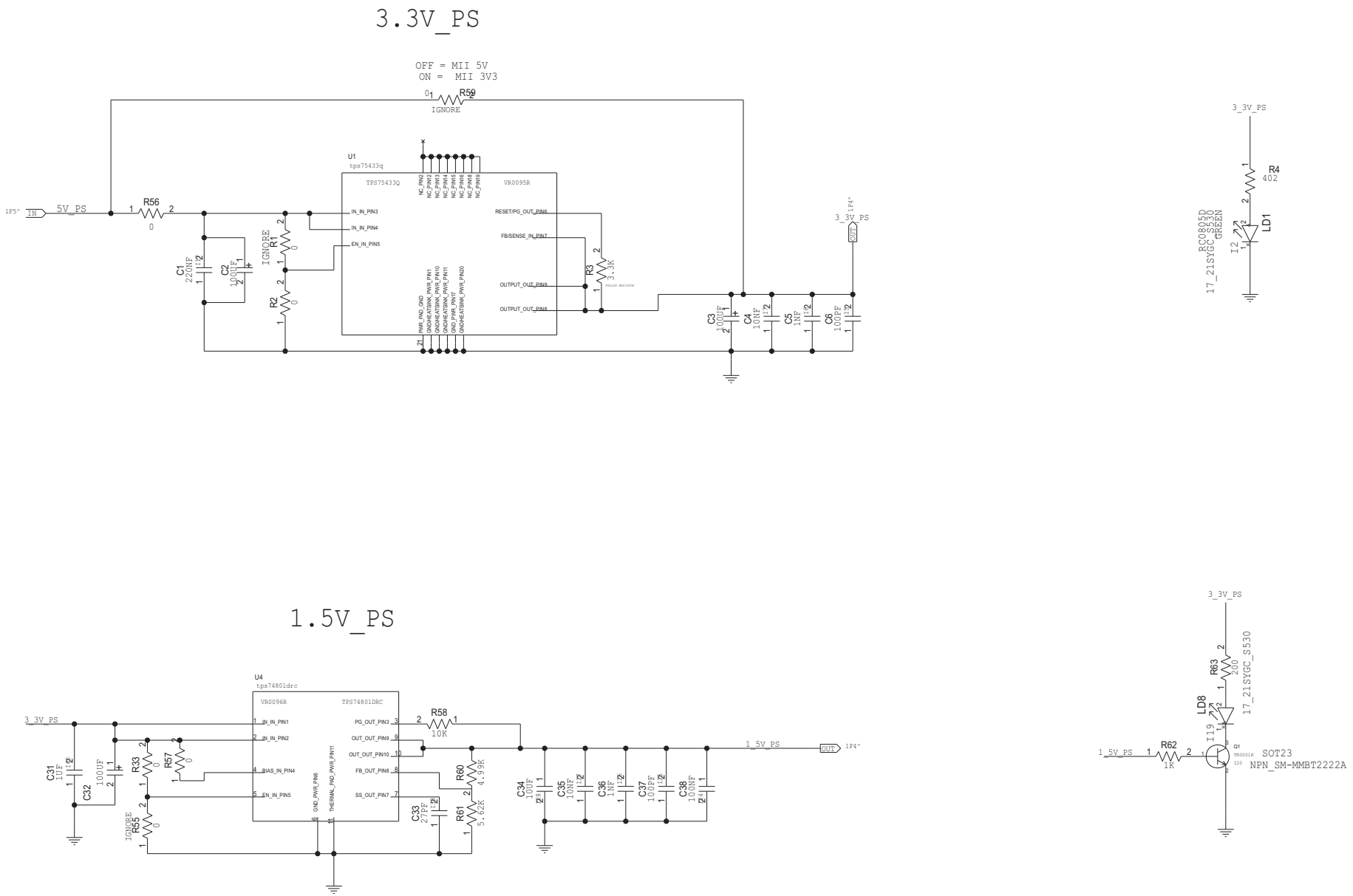

Figure 5. TLK111CUSEVM 3.3V/1.5V LDO Schematics

Copyright © 2013, Texas Instruments Incorporated

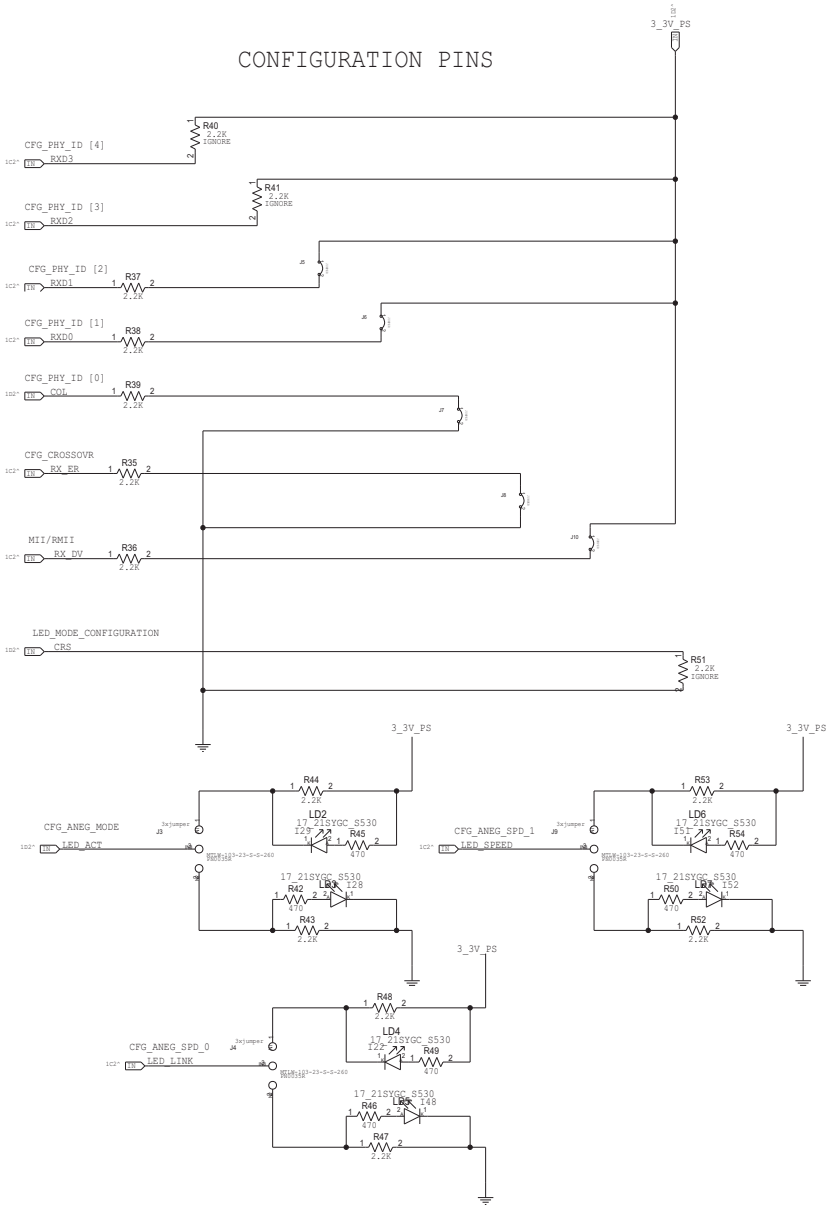

Figure 6. TLK111CUSEVM / SOR Schematics

Copyright © 2013, Texas Instruments Incorporated

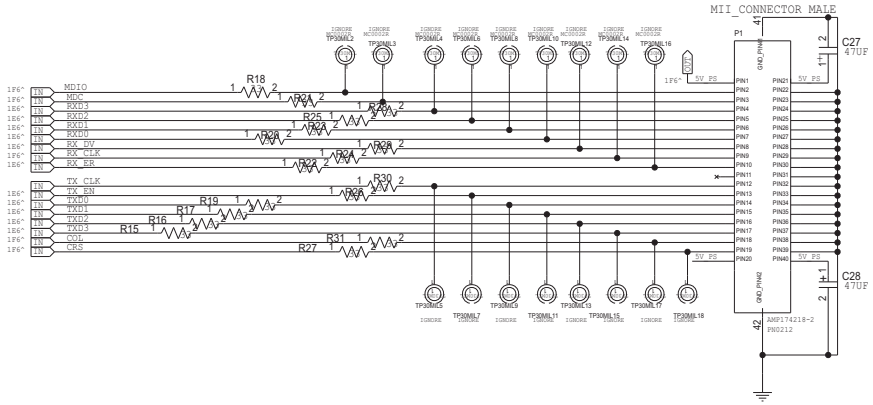

Figure 7. TLK111CUSEVM / MII Connector Schematics

Copyright © 2013, Texas Instruments Incorporated

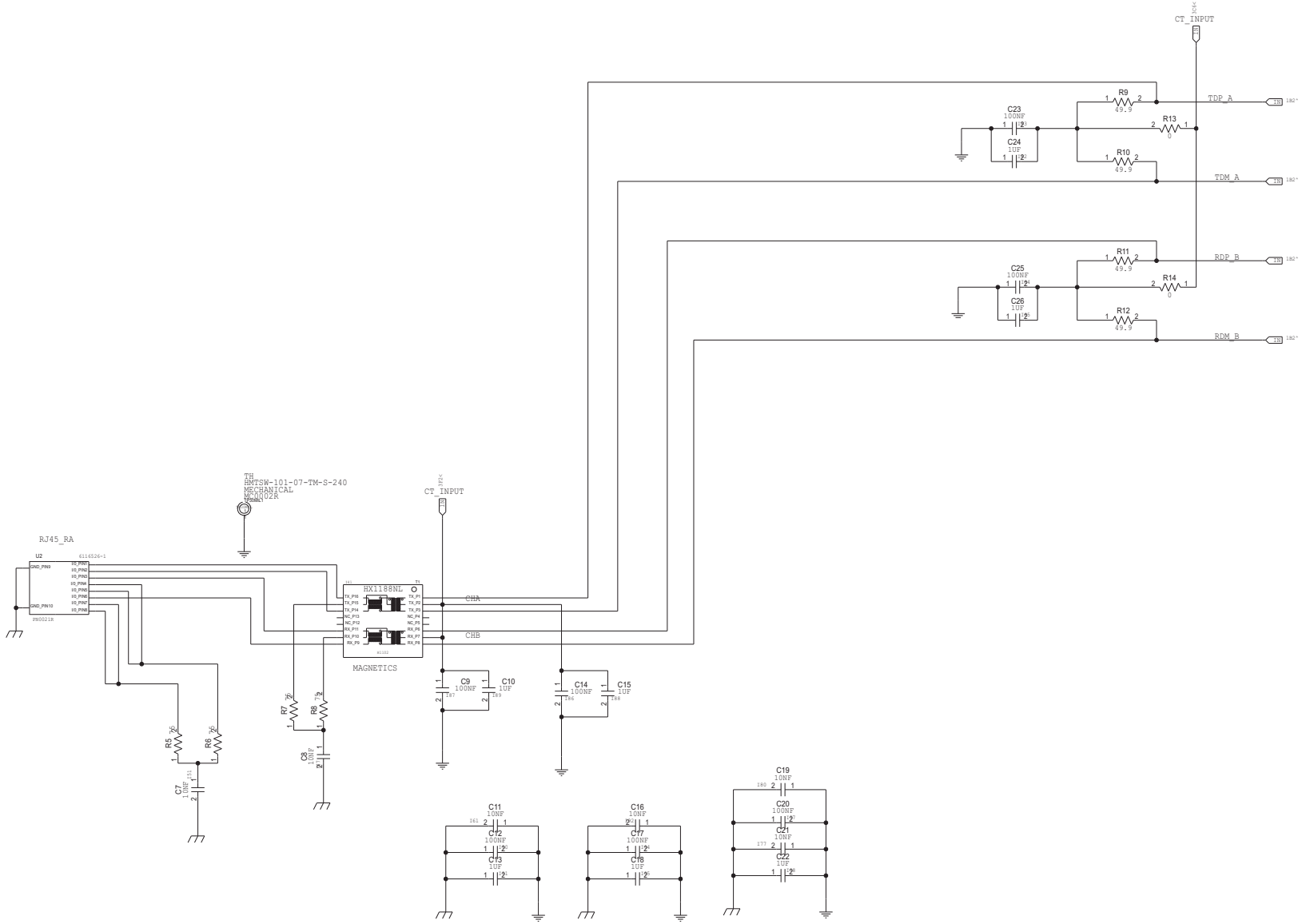

Figure 8. TLK111CUSEVM / Magnetics Schematics

Copyright © 2013, Texas Instruments Incorporated

3.7 Bill of Materials

Table 3. Bill of Materials

Part Name	Ref Des	Qty	JEDEC Type	Part No.	Vendor	Vendor Part No.	Value	BOM Ignore	Description	New Part No.
3XJUMPER_MECHANICAL-	J1,J3,J4,J9	4	JUMPERX3	PN0035R	SAMTEC	MTLW-103-23-S-S-260			JUMPERX3 MALE	CON-103260R
8_POS_TH_MEC-PN0021R,8POS,6116526-1	U2	1	8POS	PN0021R	AMP-TYCO	6116526-1			RJ45 CAT5 8 POS RA Female	CON-111031R
CAPACITOR_SINGLE-CP0042,100NF,10V,10%,10%,RC0402,GMC04X7R104K10NT	C9, C12, C14, C17, C20, C23, C25	7	RC0402	CP0042	CALCHIP	GMC04X7R104K10NT	100nF		100NF_X7R_10V_10%_0402	CAT-400134R
CAPACITOR_SINGLE-CP0044,10NF,50V,10%,10%,RC0603,VJ0603Y103KXAT	C11, C16, C19, C21, C35	5	RC0603	CP0044	VITRAMON	VJ0603Y103KXAT	10nF		10NF_X7R_50V_10%_0603	CAP-601036R
CAPACITOR_SINGLE-CP0046,1NF,50V,5%,5%,RC0603, CL10B102JBNC	C36	1	RC0603	CP0046	SAMSUNG	CL10B102JBNC	1nF		1NF_X7R_50V_5%_0603	CAP-600106R
CAPACITOR_SINGLE-CP0067,10UF,35V,20%,20%,1206, CE_GMK325_F106ZHT	C34, C42, C43, C57	4	1206	CP0067	TAIYO_YUDEN	CE_GMK325_F106ZHT	10µF		10UF_Y5V_35V_20%_1206	CAP-401010R
CAPACITOR_SINGLE-CP0105,100NF,16V,10%,10%,0603, CL10B104KONC	C38, C53-C55	4	603	CP0105	SAMSUNG	CL10B104KONC	100nF		100NF_X7R_16V_10%_0603	CAP-400136R
CAPACITOR_SINGLE-CP0105,100NF,16V,10%,10%,0603, CL10B104KONC	C56	1	603	CP0105	SAMSUNG	CL10B104KONC	100nF	Ignore	100NF_X7R_16V_10%_0603	CAP-400136R
CAPACITOR_SINGLE-CP0120,1UF,16V,80%,20%,0805,ECJ2VF1C105Z	C31	1	805	CP0120	PANASONIC	ECJ2VF1C105Z	1µF		1UF_Y5V_16V_+80%_-20%_0805	CAP-300108R
CAPACITOR_SINGLE-CP0135,1NF,25V,5%,5%,0402,VJ0402Y102JXXA	C29, C30	2	402	CP0135	VITRAMON	VJ0402Y102JXXA	1nF	Ignore	1NF_X7R_25V_5%_0402	CAS-600104R
CAPACITOR_SINGLE-CP0135,1NF,25V,5%,5%,0402,VJ0402Y102JXXA	C5, C40, C46, C47, C59	5	402	CP0135	VITRAMON	VJ0402Y102JXXA	1µF		1NF_X7R_25V_5%_0402	CAS-600104R
CAPACITOR_SINGLE-CP0136,27PF,50V,1%,1%,0603,0603N270F500NT	C33	1	603	CP0136	HITANO	0603N270F500NT	27pF		27PF_NPO_50V_1%_0603	CAP-902716R
CAPACITOR_SINGLE-CP0146,10NF,50V,5%,5%,0402, CL05B103JBNC	C4, C7, C8, C39, C44, C45, C58	7	402	CP0146	SAMSUNG	CL05B103JBNC	10nF		10NF_X7R_50V_5%_0402	CAS-601034R
CAPACITOR_SINGLE-CP0147R,100PF,50V,5%,5%,RC0402,VJ0402A101JXAT	C6, C37, C41, C49, C50, C60	6	RC0402	CP0147R	VITRAMON	VJ0402A101JXAT	100pF		100PF_NPO_50V_5%_0402	CAP-910004R
CAPACITOR_SINGLE-CP0221,1UF,6.3V,15%,15%,0603,ECJ1VB0J105K	C10, C13, C15, C18, C22, C24, C26	7	603	CP0221	PANASONIC	ECJ1VB0J105K	1µF		1UF_X7R_6V3_15%_0603	CAS-300106R
CAPACITOR_SINGLE-CP0255,220NF,16V,5%,5%,0603,0603B224J160NT	C1	1	603	CP0255	HITANO	0603B224J160NT	220nF		220NF_16V_5%_0603	CAS-402236R
CAPACITOR_SINGLE-CP0259,33PF,50V,1%,1%,0603, CL10C330FB8NNNC	C48, C51	2	603	CP0259	SAMSUNG	CL10C330FB8NNNC	33pF		33PF_NPO_50V_1%_0603	CAP-903316R
CAPACITOR_SINGLE-XXXX,10UF,10V,10%,10%,1210,GRM32AR61C106KAB7L	C52	1	1210	XXXX	MURATA	GRM32AR61C106KAB7L	10µF		10UF_X5R_10V_10%_1210 LOW ESR	CAM-301005R
F4107R_SMT5X7-OS0040R,SMT5X7,VF3AH1-25MHZ	U5	1	SMT5X7	OS0040R	VALPEY_FISHER	VF3AH1-25MHZ		Ignore	3.3V TIGHT STABILITY HCMOS SMD OSCILLATOR WITH STANDBY, 25MHz, 25ppm -40-+85 (INDUSTRIAL)	OSC-507025R
HC49SM_I-25M-INDUSTRIAL_OX0040R	XTAL1	1	HC49SM_I	OX0040R	HEC	HH2500-18-E-25PPM			XTAL HC49SM 25MHZ 100PPM 18PF INDUSTRIAL	CRS-250018R
HX1188NL_SM16-TF0116R,SM16,	T1	1	SM16	TF0122R	PULSE	HX1188NL			10/100 BASE-T MAGNETICS	CON-118800R
JUMPER_TH-PN0019,JMP02,90120-0762	J2,J5-J8,J10,J14	7	JMP02	PN0019	MOLEX	90120-0762			MOLEX JUMPER 0.1 INCH	CON-901202R
JUMPER_TH-PN0019,JMP02,90120-0762	J15	1	JMP02	PN0019	MOLEX	90120-0762		Ignore	MOLEX JUMPER 0.1 INCH	CON-901202R

Copyright © 2013, Texas Instruments Incorporated

Table 3. Bill of Materials (continued)

Part Name	Ref Des	Qty	JEDEC Type	Part No.	Vendor	Vendor Part No.	Value	BOM Ignore	Description	New Part No.
LED_SM-LD0021,50V,RC0805D,17_21SYGC_S530,GREEN	LD1-LD8	8	RC0805D	LD0021	EVERLIGHT	17_21SYGC_S530			GREEN_LED_SMD_0805	LED-215301R
MII-PN0212,,AMP174218-2	P1	1	MII-MALE	PN0212	AMP	AMP174218-2			MII_40PIN_SHILDED_THRA_MALE	CON-174218R
NPN_IC-MMBT222AA-TR0001R	Q1	1	SOT23	TR0001R	XXXX	NPN-SM-MMBT2222A			NPN SOT23 TRANSISTOR	TRS-104023R
PCAP_SINGLE-CT0024,100UF,10V,20%,20%,7343,EEJL1AD107R	C2, C3, C32	3	7343	CT0024	PANASONIC	EEJL1AD107R	100µF		100UF_10V_20%_Tantalum_Low_ESR_D_Size	CAP-100343R
PCAP_SINGLE-CT0026R,47UF,20V,10%,10%,7343,TCSVS1D476KDAR	C27, C28	2	7343	CT0026R	SAMSUNG	TCSVS1D476KDAR	47µF		47UF_TANT_20V_10%_7343	CAP-047343R
RESISTOR_2PIN-RE0004,0,0.06W,5%, RC0603JW_000E	R1, R32, R55, R59, R67, R73	6	603	RE0004	BOURNS	RC0603JW_000E	0	Ignore	0_0W06_5%_0603	RES-100006R
RESISTOR_2PIN-RE0004,0,0.06W,5%, RC0603JW_000E	R2, R13, R14, R33, R56, R57, R66, R71, R72	9	603	RE0004	BOURNS	RC0603JW_000E	0		0_0W06_5%_0603	RES-100006R
RESISTOR_2PIN-RE0005,0,0.1W,5%, RC0805JW_000E	R64, R65, R79, R106	4	805	RE0005	BOURNS	RC0805JW_000E	0		0R_0W1_5%_0805	RES-100008R
RESISTOR_2PIN-RE0005,0,0.1W,5%, RC0805JW_000E	R77, R80	2	805	RE0005	BOURNS	RC0805JW_000E	0	Ignore	0R_0W1_5%_0805	RES-100008R
RESISTOR_2PIN-RE0044,4.7K,0.06W,5%, CR0603JW-472E	R68	1	603	RE0044	BOURNS	CR0603JW-472E	4.7kΩ		4K7_0W06_5%_0603	RES-404706R
RESISTOR_2PIN-RE0085,49.9,0.06W,1%, RC0402FR-0749R9	R9-R12	4	402	RE0085	YAGEO	RC0402FR-0749R9	49.9Ω		49R9_0W06_1%_0402	RES-249914R
RESISTOR_2PIN-RE0114R,4.99K,0.06W,1%, CR0603-FX-4991ELF	R60	1	RC0603	RE0114R	BOURNS	CR0603-FX-4991ELF	4.99kΩ		RESISTOR_49.9K_1%_0603	RES-349906R
RESISTOR_2PIN-RE0125,1K,0.06W,1%, CR0603FX_1001E	R62	1	603	RE0125	YAGEO	CR0603FX_1001E	1kΩ		1K_0W06_1%_0603	RES-300106R
RESISTOR_2PIN-RE0152,470,0.1W,1%, CR0603FX-470R	R42, R45, R46, R49, R50, R54	6	603	RE0152	YAGEO	CR0603FX-470R	470Ω		470_0W1_1%_0603	RES-147006R
RESISTOR_2PIN-RE0182,10K,0.06W,1%, RC0603FR_0710K	R58	1	603	RE0182	YAGEO	RC0603FR_0710K	10kΩ		10K_0W06_1%_0603	RES-301006R
RESISTOR_2PIN-RE0218,200,0.06W,1%, RC0603FR-07200R	R63	1	603	RE0218	AVX	RC0603FR-07200R	200Ω		200R_0W06_1%_0603	RES-320006R
RESISTOR_2PIN-RE0294,75,0.06W,1%, CR0603FX_75R	R5-R8	4	603	RE0294	YAGEO	CR0605FX_75R	75Ω		75R_0W06_1%_0603	RES-107506R
RESISTOR_2PIN-RE0343,3.3K,0.06W,1%, CR0402FX-3301G	R3	1	402	RE0343	YAGEO	CR0402FX-3301G	3.3kΩ		3K3_0W06_1%_0402	RES-403304R
RESISTOR_2PIN-RE0475,5.62K,0.06W,1%, RC0603FR-075K62	R61	1	603	RE0475	YAGEO	RC0603FR-075K62	5.62kΩ		5K62_0W06_1%_0603	RES-856216R
RESISTOR_2PIN-RE0518R,402,0.06W,1%, CR0603-FX-402RELF	R4	1	603	RE0518R	BOURNS	CR0603-FX-402RELF	402Ω		RESISTOR_402OHM_1%_0603	RES-140206R
RESISTOR_2PIN-RE0536R,1M,0.06W,1%, RC0402FR-071M	R70	1	RC0402	RE0536R	YAGEO	RC0402FR-071M	1MΩ		RESISTOR_1M_1%_0402	RES-600104R
RESISTOR_2PIN-RE0661R,2.2K,0.06W,1%, CR0402FR-072K2L	R35-R39, R43, R44, R47, R48, R52, R53, R74, R75, R82, R88, R97, R99	16	402	RE0661R	YAGEO	CR0402FR-072K2L	2.2kΩ		2.2K_0W06_1%_0402	RES-402204R
RESISTOR_2PIN-RE0661R,2.2K,0.06W,1%, CR0402FR-072K2L	R40, R41, R51, R76, R78, R83-R87, R89-R92, R98	16	402	RE0661R	YAGEO	CR0402FR-072K2L	2.2kΩ	Ignore	2.2K_0W06_1%_0402	RES-402204R

Copyright © 2013, Texas Instruments Incorporated

Table 3. Bill of Materials (continued)

Part Name	Ref Des	Qty	JEDEC Type	Part No.	Vendor	Vendor Part No.	Value	BOM Ignore	Description	New Part No.
RESISTOR_2PIN-RE0662R,33,0.06W,1%, CR0402FR-0733R	R15-R31	17	402	RE0662R	YAGEO	CR0402FR-0733R	33Ω		33_0W06_1%_0402	RES-103304R
RESISTOR_2PIN-XXXX,4.87K,0.06W,1%, CR0603-FX-4871ELF	R96	1	RC0603	XXXX	BOURNS	CR0603-FX-4871ELF	4.87kΩ		RESISTOR_4.87K_1%_0603	RES-404876R
TLK111_IC-XXXX.	U6	1	QFP50P900X900X120-49	XXXX	TI	TLK111			INDUSTRIAL ETHERNET 10/100BT	TLK111
TP30MIL_MECHANICAL-MC0002R	TP30MIL1,TP30MIL19-TP30MIL22	5	TH	MC0002R	SAMTEC	HMTSW-101-07-TM-S-240			TESTPOINT_TH_0.9mm_pad_1.7MM	CON-101240R
TP30MIL_MECHANICAL-MC0002R	TP30MIL2-TP30MIL18	17	TH	MC0002R	SAMTEC	HMTSW-101-07-TM-S-240		Ignore	TESTPOINT_TH_0.9mm_pad_1.7MM	CON-101240R
TPM_MECH_VIA	M200-M203	4	TPM_MECH_VIA							
TPS3825-33DBVT_IC-MX0052,DBV,TPS3825-33DBVT	U3	1	DBV	MX0052	TI	TPS3825-33DBVT		Ignore	PROCESSOR SUPERVISORY CIRCUITS WITH MR_N INPUT	REG-382533R
TPS74801DRC_IC-VR0096R,SON10,TPS74801DRC	U4	1	SON10	VR0096R	TI	TPS74801DRC			LDO 1.5A ADJ	REG-748010R
TPS75433Q_IC-VR0095R,TSSOP-20,TPS75433Q	U1	1	TSSOP-20	VR0095R	TI	TPS75433Q			LDO 3.3V 2A	REG-754330R

Copyright © 2013, Texas Instruments Incorporated

4 Software

The EVM does not require any specific software and can be controlled with networking equipment that support a MII interface. However for SmartBits users, TI can provide a proprietary GUI that simplifies the controllability of the TLK111CUSEVM through SmartBits and allows advanced features such as a cable diagnostic tool.

Copyright © 2013, Texas Instruments Incorporated

Evaluation Board/Kit Important Notice

Texas Instruments (TI) provides the enclosed product(s) under the following conditions:

This evaluation board/kit is intended for use for **ENGINEERING DEVELOPMENT, DEMONSTRATION, OR EVALUATION PURPOSES ONLY** and is not considered by TI to be a finished end-product fit for general consumer use. Persons handling the product(s) must have electronics training and observe good engineering practice standards. As such, the goods being provided are not intended to be complete in terms of required design-, marketing-, and/or manufacturing-related protective considerations, including product safety and environmental measures typically found in end products that incorporate such semiconductor components or circuit boards. This evaluation board/kit does not fall within the scope of the European Union directives regarding electromagnetic compatibility, restricted substances (RoHS), recycling (WEEE), FCC, CE or UL, and therefore may not meet the technical requirements of these directives or other related directives.

Should this evaluation board/kit not meet the specifications indicated in the User's Guide, the board/kit may be returned within 30 days from the date of delivery for a full refund. THE FOREGOING WARRANTY IS THE EXCLUSIVE WARRANTY MADE BY SELLER TO BUYER AND IS IN LIEU OF ALL OTHER WARRANTIES, EXPRESSED, IMPLIED, OR STATUTORY, INCLUDING ANY WARRANTY OF MERCHANTABILITY OR FITNESS FOR ANY PARTICULAR PURPOSE.

The user assumes all responsibility and liability for proper and safe handling of the goods. Further, the user indemnifies TI from all claims arising from the handling or use of the goods. Due to the open construction of the product, it is the user's responsibility to take any and all appropriate precautions with regard to electrostatic discharge.

EXCEPT TO THE EXTENT OF THE INDEMNITY SET FORTH ABOVE, NEITHER PARTY SHALL BE LIABLE TO THE OTHER FOR ANY INDIRECT, SPECIAL, INCIDENTAL, OR CONSEQUENTIAL DAMAGES.

TI currently deals with a variety of customers for products, and therefore our arrangement with the user **is not exclusive.**

TI assumes **no liability for applications assistance, customer product design, software performance, or infringement of patents or services described herein.**

Please read the User's Guide and, specifically, the Warnings and Restrictions notice in the User's Guide prior to handling the product. This notice contains important safety information about temperatures and voltages. For additional information on TI's environmental and/or safety programs, please contact the TI application engineer or visit www.ti.com/esh.

No license is granted under any patent right or other intellectual property right of TI covering or relating to any machine, process, or combination in which such TI products or services might be or are used.

FCC Warning

This evaluation board/kit is intended for use for **ENGINEERING DEVELOPMENT, DEMONSTRATION, OR EVALUATION PURPOSES ONLY** and is not considered by TI to be a finished end-product fit for general consumer use. It generates, uses, and can radiate radio frequency energy and has not been tested for compliance with the limits of computing devices pursuant to part 15 of FCC rules, which are designed to provide reasonable protection against radio frequency interference. Operation of this equipment in other environments may cause interference with radio communications, in which case the user at his own expense will be required to take whatever measures may be required to correct this interference.

EVM Warnings and Restrictions

It is important to operate this EVM within the input voltage range of 5 V or 3.3 V and the output voltage range of N/A V to N/A V .

Exceeding the specified input range may cause unexpected operation and/or irreversible damage to the EVM. If there are questions concerning the input range, please contact a TI field representative prior to connecting the input power.

Applying loads outside of the specified output range may result in unintended operation and/or possible permanent damage to the EVM. Please consult the EVM User's Guide prior to connecting any load to the EVM output. If there is uncertainty as to the load specification, please contact a TI field representative.

During normal operation, some circuit components may have case temperatures greater than 60° C. The EVM is designed to operate properly with certain components above 60° C as long as the input and output ranges are maintained. These components include but are not limited to linear regulators, switching transistors, pass transistors, and current sense resistors. These types of devices can be identified using the EVM schematic located in the EVM User's Guide. When placing measurement probes near these devices during operation, please be aware that these devices may be very warm to the touch.

Mailing Address: Texas Instruments, Post Office Box 655303, Dallas, Texas 75265
Copyright © 2013, Texas Instruments Incorporated

IMPORTANT NOTICE

Texas Instruments Incorporated and its subsidiaries (TI) reserve the right to make corrections, enhancements, improvements and other changes to its semiconductor products and services per JESD46, latest issue, and to discontinue any product or service per JESD48, latest issue. Buyers should obtain the latest relevant information before placing orders and should verify that such information is current and complete. All semiconductor products (also referred to herein as “components”) are sold subject to TI’s terms and conditions of sale supplied at the time of order acknowledgment.

TI warrants performance of its components to the specifications applicable at the time of sale, in accordance with the warranty in TI’s terms and conditions of sale of semiconductor products. Testing and other quality control techniques are used to the extent TI deems necessary to support this warranty. Except where mandated by applicable law, testing of all parameters of each component is not necessarily performed.

TI assumes no liability for applications assistance or the design of Buyers’ products. Buyers are responsible for their products and applications using TI components. To minimize the risks associated with Buyers’ products and applications, Buyers should provide adequate design and operating safeguards.

TI does not warrant or represent that any license, either express or implied, is granted under any patent right, copyright, mask work right, or other intellectual property right relating to any combination, machine, or process in which TI components or services are used. Information published by TI regarding third-party products or services does not constitute a license to use such products or services or a warranty or endorsement thereof. Use of such information may require a license from a third party under the patents or other intellectual property of the third party, or a license from TI under the patents or other intellectual property of TI.

Reproduction of significant portions of TI information in TI data books or data sheets is permissible only if reproduction is without alteration and is accompanied by all associated warranties, conditions, limitations, and notices. TI is not responsible or liable for such altered documentation. Information of third parties may be subject to additional restrictions.

Resale of TI components or services with statements different from or beyond the parameters stated by TI for that component or service voids all express and any implied warranties for the associated TI component or service and is an unfair and deceptive business practice. TI is not responsible or liable for any such statements.

Buyer acknowledges and agrees that it is solely responsible for compliance with all legal, regulatory and safety-related requirements concerning its products, and any use of TI components in its applications, notwithstanding any applications-related information or support that may be provided by TI. Buyer represents and agrees that it has all the necessary expertise to create and implement safeguards which anticipate dangerous consequences of failures, monitor failures and their consequences, lessen the likelihood of failures that might cause harm and take appropriate remedial actions. Buyer will fully indemnify TI and its representatives against any damages arising out of the use of any TI components in safety-critical applications.

In some cases, TI components may be promoted specifically to facilitate safety-related applications. With such components, TI’s goal is to help enable customers to design and create their own end-product solutions that meet applicable functional safety standards and requirements. Nonetheless, such components are subject to these terms.

No TI components are authorized for use in FDA Class III (or similar life-critical medical equipment) unless authorized officers of the parties have executed a special agreement specifically governing such use.

Only those TI components which TI has specifically designated as military grade or “enhanced plastic” are designed and intended for use in military/aerospace applications or environments. Buyer acknowledges and agrees that any military or aerospace use of TI components which have ***not*** been so designated is solely at the Buyer's risk, and that Buyer is solely responsible for compliance with all legal and regulatory requirements in connection with such use.

TI has specifically designated certain components as meeting ISO/TS16949 requirements, mainly for automotive use. In any case of use of non-designated products, TI will not be responsible for any failure to meet ISO/TS16949.

Products		**Applications**	
Audio	www.ti.com/audio	Automotive and Transportation	www.ti.com/automotive
Amplifiers	amplifier.ti.com	Communications and Telecom	www.ti.com/communications
Data Converters	dataconverter.ti.com	Computers and Peripherals	www.ti.com/computers
DLP® Products	www.dlp.com	Consumer Electronics	www.ti.com/consumer-apps
DSP	dsp.ti.com	Energy and Lighting	www.ti.com/energy
Clocks and Timers	www.ti.com/clocks	Industrial	www.ti.com/industrial
Interface	interface.ti.com	Medical	www.ti.com/medical
Logic	logic.ti.com	Security	www.ti.com/security
Power Mgmt	power.ti.com	Space, Avionics and Defense	www.ti.com/space-avionics-defense
Microcontrollers	microcontroller.ti.com	Video and Imaging	www.ti.com/video
RFID	www.ti-rfid.com		
OMAP Applications Processors	www.ti.com/omap	**TI E2E Community**	e2e.ti.com
Wireless Connectivity	www.ti.com/wirelessconnectivity		

Mailing Address: Texas Instruments, Post Office Box 655303, Dallas, Texas 75265
Copyright © 2013, Texas Instruments Incorporated