High Precision Hall-Effect Switch TLE4976L

Data Sheet Version 1.0
2003-11-20

Features

- 2-wire current interface 6/14 mA
- 3.0V to 24V supply voltage operation
- Operation from unregulated power supply
- High sensitivity and high stability of the magnetic switching points
- High resistance to mechanical stress by Active Error Compensation
- Reverse battery protection (-18V)
- Superior temperature stability
- Peak temperatures up to 195°C without damage
- Low jitter (typ. 1µs)
- High ESD performance (±8kV HBM)
- Digital output signal
- Unipolar version
- Leaded package P-SSO-3-2

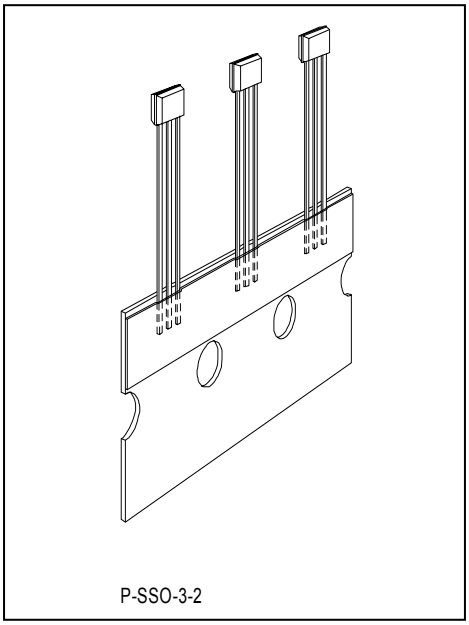

Type	Ordering Code	Package
TLE4976L	Q62705-K692	P-SSO-3-2

Functional Description

The TLE4976L is an integrated circuit Hall-effect sensor designed specifically for highly accurate applications with a current interface. Precise magnetic switching points and high temperature stability are achieved by active compensation circuits and chopper techniques on chip.

Circuit Description

The chopped Hall IC Switch comprises a Hall probe, bias generator, compensation circuits, oscillator, and a current output.
The bias generator provides currents for the Hall probe and the active circuits. Compensation circuits stabilize the temperature behavior and reduce technology variations.

The Active Error Compensation rejects offsets in signal stages and the influence of mechanical stress to the Hall probe caused by molding and soldering processes and other thermal stresses in the package. This chopper technique together with the threshold generator and the comparator ensure high accurate magnetic switching points.

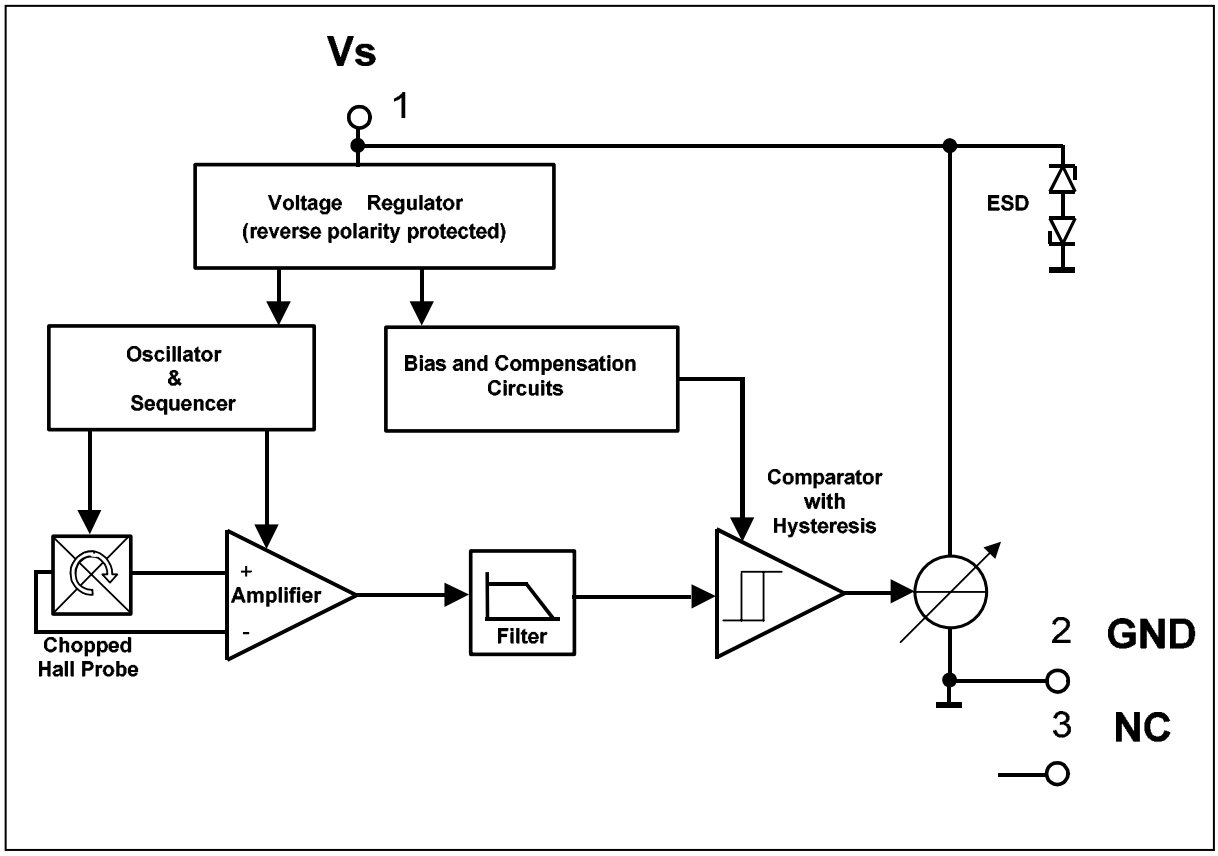

Figure 1 Block Diagram

Pin Configuration

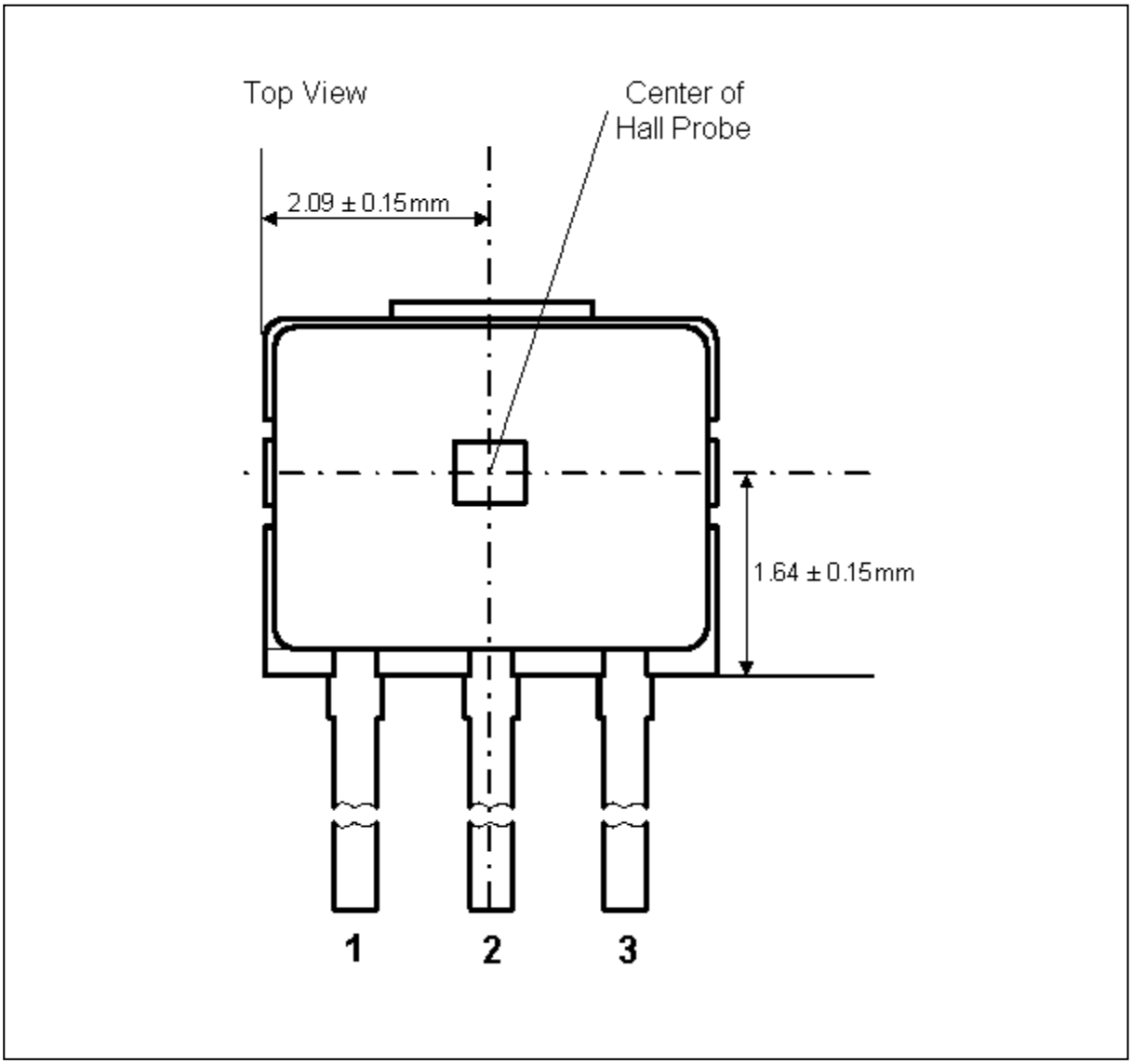

Figure 2: Pin Configuration

Pin Definition and Functions

Pin	Symbol	Function
1	V_S	Supply voltage
2	GND	Ground
3	NC	No internal connection

Absolute Maximum Ratings

Tj = -40 to 150°C

Parameter	Symbol	min.	max.	Unit	Conditions
Supply Voltage	V_S	-18 -18 -18	18 24 26	V	 for 1h (R_S+R_L > 75 Ohm) for 5min (R_S+R_L > 75 Ohm)
Supply Current through protection device	Is	-50	+50	mA	
Junction Temperature	T_j	-	155 165 175 195	°C	for 2000 h (not additive) for 1000 h (not additive) for 168 h (not additive) for 3x1 h (additive)
Storage Temperature	T_S	-40	150	°C	
Magnetic Flux Density	B	-	unlimit.	mT	

Note: Stresses above those listed here may cause permanent damage to the device.
Exposure to absolute maximum rating conditions for extended periods may affect device reliability.

ESD Protection

Human Body Model (HBM) tests according to:
EOS/ESD Association Standard S5.1-1993 and Mil. Std. 883D method 3015.7

Parameter	Symbol	max.	Unit	Conditions
ESD Voltage	V_{ESD}	± 8	kV	HBM, R= 1.500 Ohm, C= 100pF; T_A = 25°C

Operating Range

Parameter	Symbol	min.	typ.	max.	Unit	Conditions
Supply Voltage	V_S	3.0 3.0	-	18 24	V	 for 5min (R_S+R_L > 100 Ohm)
Junction Temperature	T_j	-40	-	150 175	°C	 for 168 h

AC/DC Characteristics

over operating range, unless otherwise specified. Typical values correspond to V_S=12V and T_A=25°C.

Parameter	Symbol	min.	typ.	max.	Unit	Conditions
Supply Current low	I_{Slow}	5	6	7	mA	B>Brp; V_S = 3.0V .. 18V
Supply Current high	I_{Shigh}	12	14	17	mA	B<Bop; V_S = 3.0V .. 18V
Reverse Current	I_{SR}	0	-	0.2	mA	V_S= -18V
Output Fall Time	t_f		0.4	1.6	µs	R_S= 100 Ohm; Figure 3
Output Rise Time	t_r		0.4	1.6	µs	R_S= 100 Ohm; Figure 3
Chopper Frequency	f_{OSC}	-	320	-	kHz	
Switching Frequency	f_{SW}	0	-	15[1)]	kHz	
Delay Time[2]	t_d	-	13	-	µs	
Output Jitter[3]	T_{QJ}	-	1	-	$µs_{RMS}$	Typ. Value for Square-Wave Signal 1kHz
Repeatability of magnetic thresholds[4]	B_{REP}	-	40	-	$µT_{RMS}$	Typ. Value for ΔB/Δt>12mT/ms
Power-On Time[5]	t_{PON}	-	13	-	µs	V_S >= 3.0V
Thermal Resistance[6] P-SSO-3-2	R_{thJA}	-	-	190	K/W	

1) To operate the sensor at the max. switching frequency, the value of the magnetic signal amplitude must be 1.4 times higher than for static fields. This is due to the -3dB corner frequency of the low pass filter in the signal path.
2) Systematic delay between magnetic threshold reached and output switching.
3) Jitter is the unpredictable deviation of the output switching delay.
4) B_{REP} is equivalent to the noise constant.
5) Time from applying V_S >= 3.0 V to the sensor until the output state is valid.
6) Thermal resistance from junction to ambient.
e.g.: V_S=12.0 V, R_S=100 Ohms, I_{Shigh_typ}=14 mA => Power Dissipation P_{dis}=148.4 mW.
In $T_A = T_j – (R_{thJA} * P_{dis})$ = 175 °C – (190 K/W * 0.1484 W) => T_A = 146.8 °C

Magnetic Characteristics

over operating range, unless otherwise specified. Typical values correspond to V_S=12V.

Parameter	Symbol	Tj [°C]	min.	typ.	max.	Unit	Conditions
Operate Point TLE4976L	B_{OP}	 -40 25 150	 1.1 1.0 0.9	 4.1 4.0 3.8	 6.1 6.0 5.8	mT	
Release Point TLE4976L	B_{RP}	 -40 25 150	 3.1 3.0 2.9	 6.1 6.0 5.8	 8.2 8.0 7.7	mT	
Hysteresis TLE4976L	B_{HYS}	 -40 25 150	 - 0.5 -	 - 2.0 -	 - 3.5 -	mT	
Temperature Compensation of Magnetic Thresholds	TC	-	-	-200	-	ppm/°C	

Positive magnetic fields related with south pole of magnet to the branded side of package.
Note: Typical characteristics specify mean values expected over the production spread.

Timing Diagram

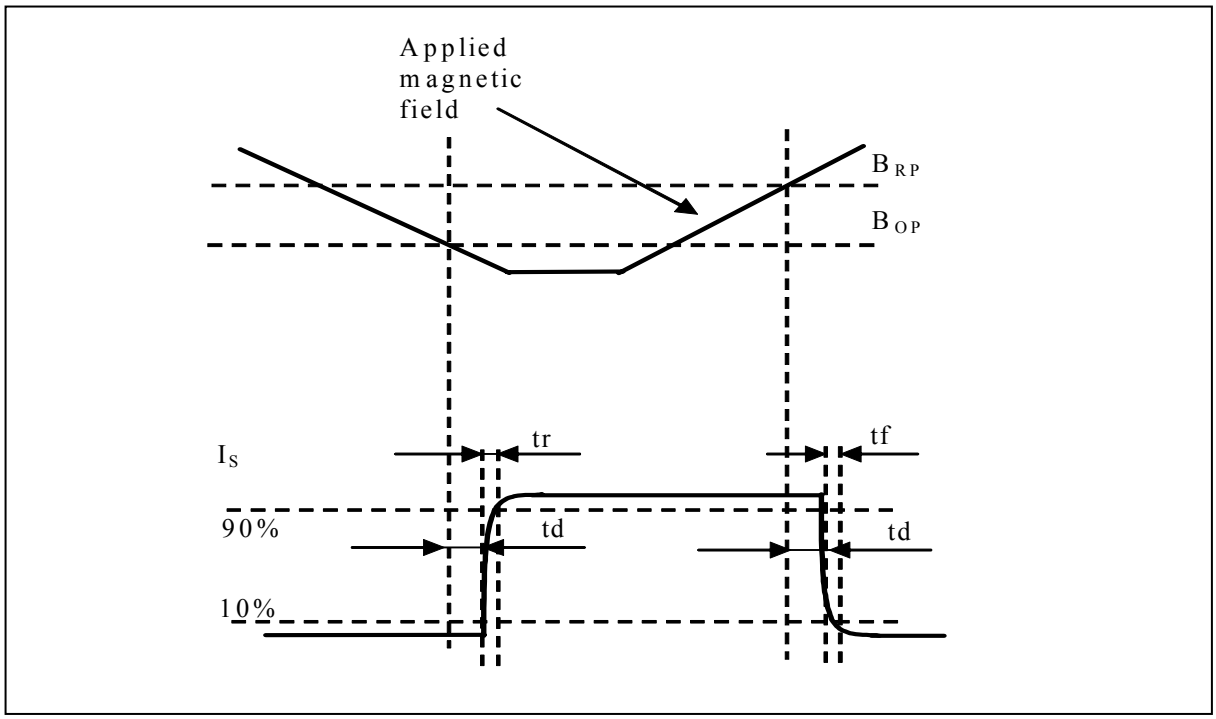

Figure 3: Timing Definition

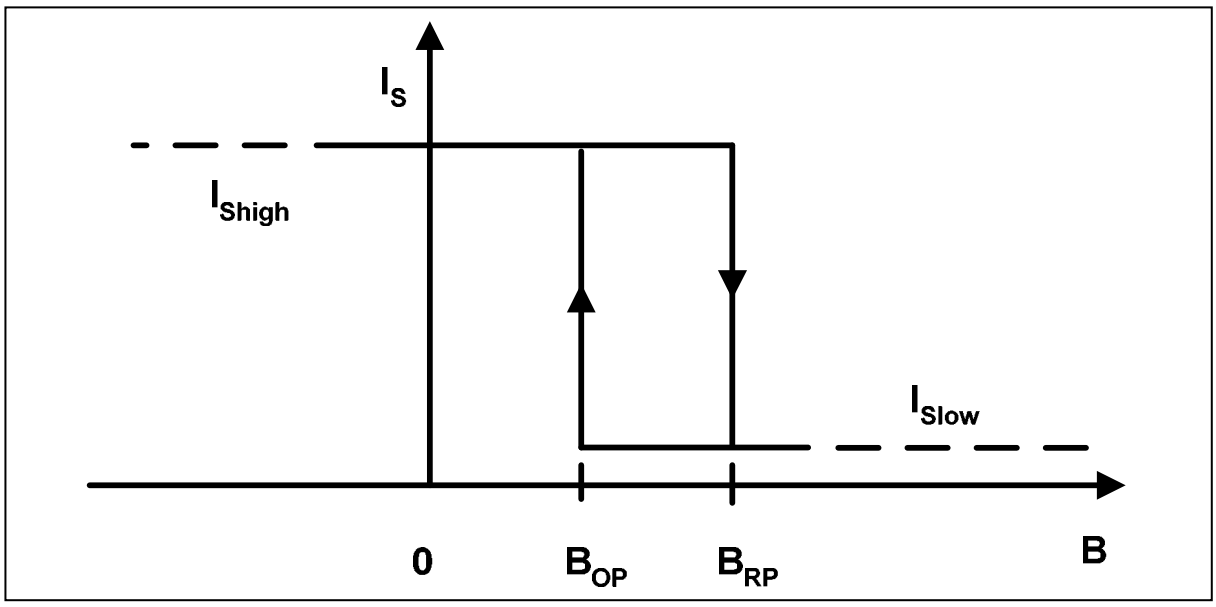

Figure 4: Output Signal

Package Dimension P-SSO-3-2

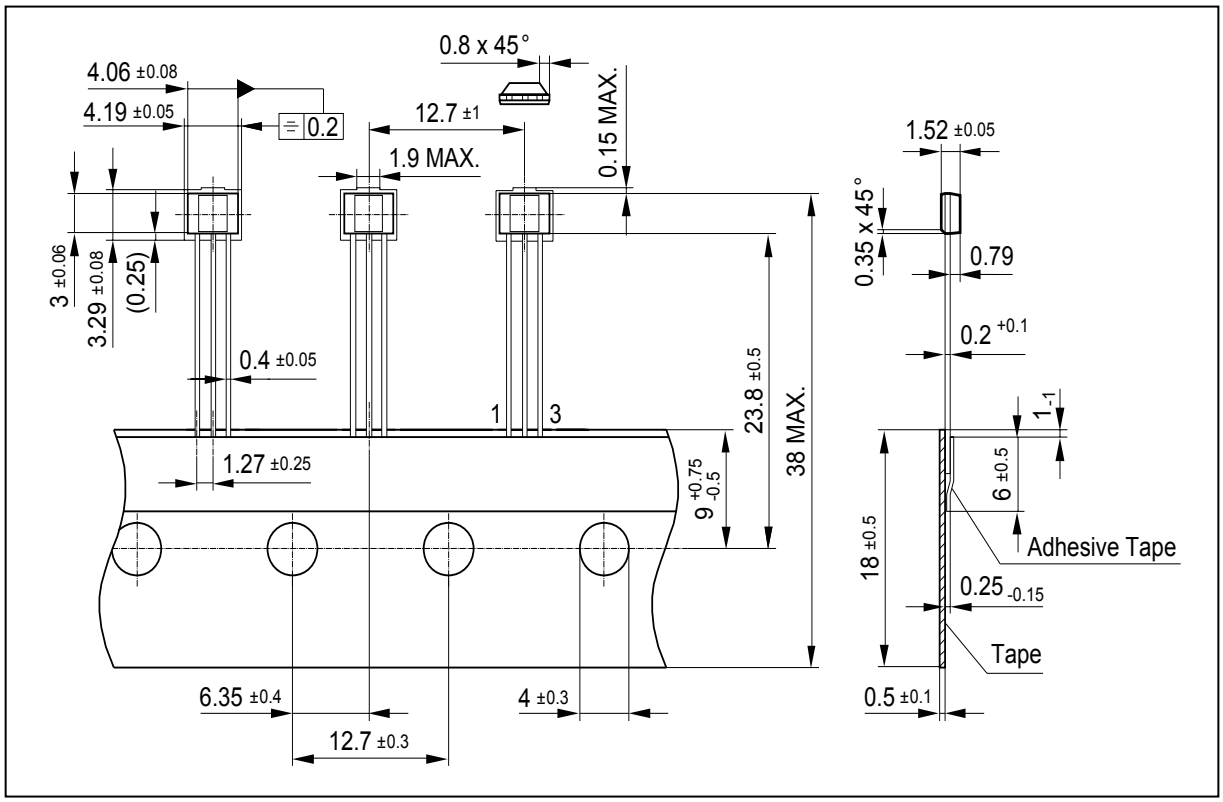

Figure 5: Package Dimension

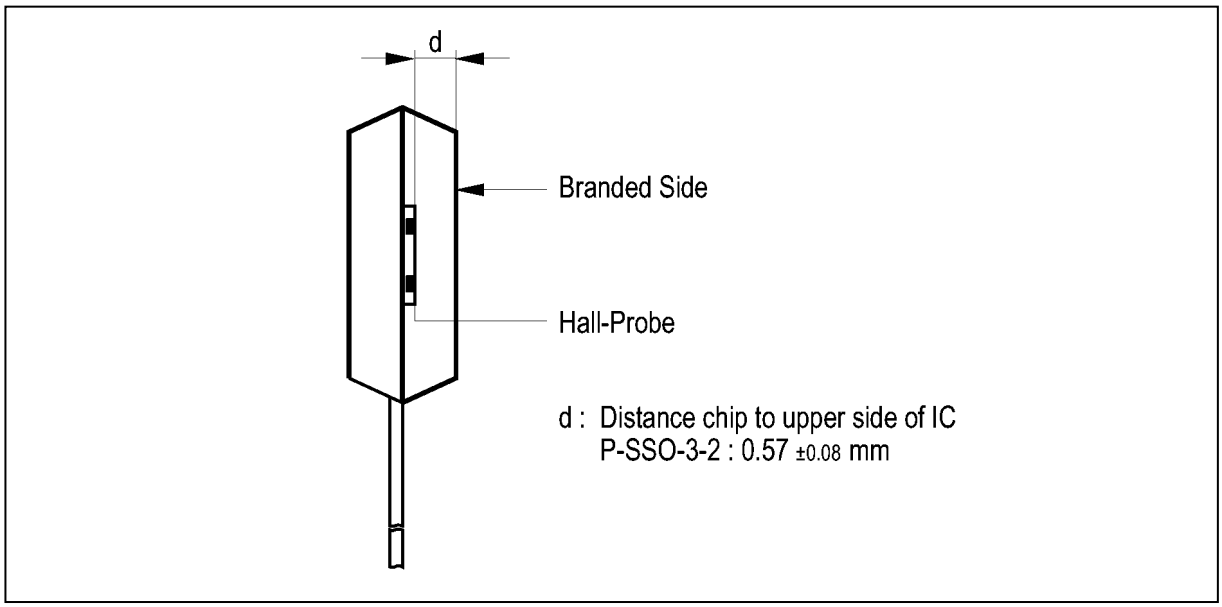

Figure 6: Distance Chip to Upper Side of IC

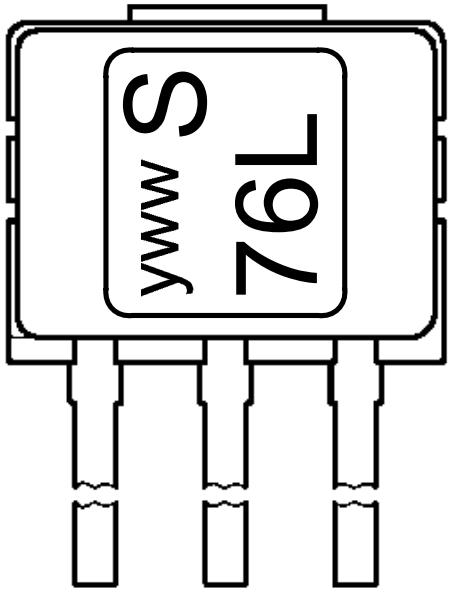

Year (y) = 0..9
Calendar Week (ww) = 01..52

Figure 7: Marking

TLE4976L Revision History: Version 1.0	2003-11-20
Previous Version:	
Page	Subjects (major changes since last revision)

For questions on technology, delivery and prices please contact the Infineon Technologies Offices in Germany or the Infineon Technologies Companies and Representatives worldwide: see our webpage at http://www.infineon.com

We Listen to Your Comments

Any information within this document that you feel is wrong, unclear or missing at all?
Your feedback will help us to continuously improve the quality of this document.
Please send your proposal (including a reference to this document) to:
feedback.sensors@infineon.com

Edition 2001-02-22
Published by Infineon Technologies AG
St.-Martin-Strasse 53
D-81541 München

© Infineon Technologies AG 2000
All Rights Reserved.

Attention please!

The information herein is given to describe certain components and shall not be considered as warranted characteristics.

Terms of delivery and rights to technical change reserved.

We hereby disclaim any and all warranties, including but not limited to warranties of non-infringement, regarding circuits, descriptions and charts stated herein.

Infineon Technologies is an approved CECC manufacturer.

Information

For further information on technology, delivery terms and conditions and prices please contact your nearest Infineon Technologies Office in Germany or our Infineon Technologies Representatives worldwide (see address list).

Warnings

Due to technical requirements components may contain dangerous substances. For information on the types in question please contact your nearest Infineon Technologies Office.

Infineon Technologies Components may only be used in life-support devices or systems with the express written approval of Infineon Technologies, if a failure of such components can reasonably be expected to cause the failure of that life-support device or system, or to affect the safety or effectiveness of that device or system. Life support devices or systems are intended to be implanted in the human body, or to support and/or maintain and sustain and/or protect human life. If they fail, it is reasonable to assume that the health of the user or other persons may be endangered.