TLC59291 8/16-Channel, Constant Current LED Driver with 7-bit Brightness Control Low Quiescent Current and Full Self Diagnosis for LED Lamp

1 Features

- 8/16 Constant-Current Sink Output Channels with On/Off Control
- Current Capability:
  - 1 - 40 mA (V_{CC} ≤ 3.6 V)
  - 1 - 50 mA (V_{CC} > 3.6 V)
- Global Brightness Control: 7-Bit (128 Steps)
- Power-Supply Voltage Range: 3 V to 5.5 V
- LED Power-Supply Voltage: Up to 10 V
- Constant-Current Accuracy:
  - Channel-to-Channel = ±3% (Typical)
  - Device-to-Device = ±2% (Typical)
- Low Quiescent Current
- SOUT can be Configured for 8-Channel or 16-Channel Output
- LED Open Detection (LOD)/LED Short Detection (LSD) with Invisible Detection Mode (IDM)
- Output Leakage Detection (OLD) Detects 3 µA Leak
- Pre-Thermal Warning (PTW)
- Thermal Shutdown (T_{SD})
- Current Reference Terminal Short Flag (ISF)
- Power-Save Mode with 10-µA Consumption
- Undervoltage Lockout Sets the Default Data
- 2-ns Delayed Switching Between Each Channel Minimizes Inrush Current
- Operating Temperature: –40°C to 85°C

2 Applications

- Industry LED Indicator
- Illumination
- LED Video Display

3 Description

The TLC59291 is a 8/16-channel constant current sink LED driver. Each channel can be turned on-off by writing data to an internal register. The constant current value of all 16 channels is set by a single external resistor and 128 steps for the global brightness control (BC).

The TLC59291 has six type error flags: LED open detection (LOD), LED short detection (LSD), output leak detection (OLD), reference terminal short detection (ISF), Pre thermal warning (PTW) and thermal error flag (TEF). In addition, the LOD and LSD functions have invisible detection mode (IDM) that can detect those errors even when the output is off. The error detection results can be read via a serial interface port.

The TLC59291 has low quiescent current in normal mode, it also has a power-save mode that sets the total current consumption to 10 uA (typical) when all outputs are off.

Device Information[1]

PART NUMBER	PACKAGE	BODY SIZE (NOM)
TLC59291	VQFN (24)	4.00mm x 4.00mm

(1) For all available packages, see the orderable addendum at the end of the data sheet.

Typical Application Circuit (Multiple Daisy Chained TLC59291s)

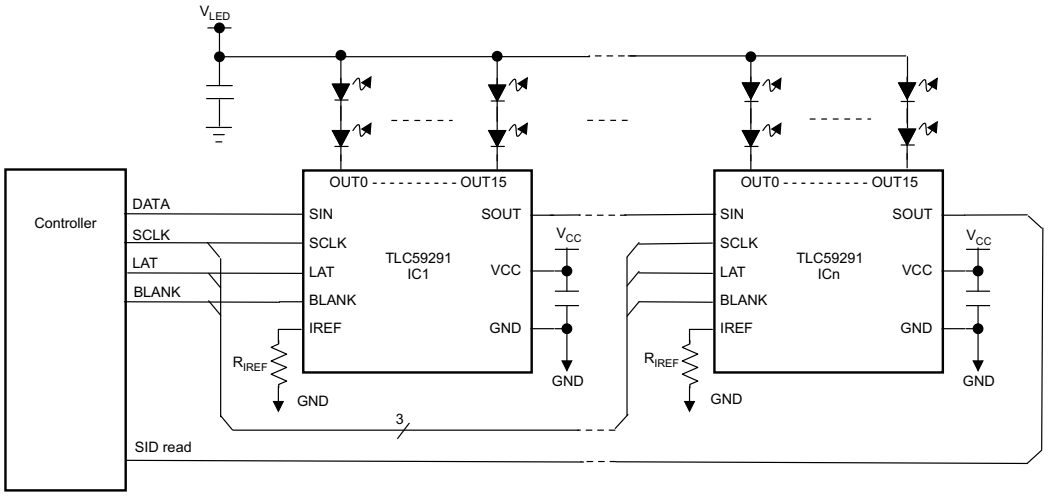

An IMPORTANT NOTICE at the end of this data sheet addresses availability, warranty, changes, use in safety-critical applications, intellectual property matters and other important disclaimers. PRODUCTION DATA.

Table of Contents

1 Features ... 1
2 Applications ... 1
3 Description ... 1
4 Revision History ... 2
5 Pin Configuration and Functions ... 3
6 Specifications ... 4
6.1 Absolute Maximum Ratings ... 4
6.2 ESD Ratings ... 5
6.3 Recommended Operating Conditions ... 5
6.4 Thermal Information ... 5
6.5 Electrical Characteristics ... 6
6.6 Switching Characteristics ... 8
6.7 Timing Diagrams ... 9
6.8 Typical Characteristics ... 21
7 Parameter Measurement Information ... 23
8 Detailed Description ... 24
8.1 Overview ... 24
8.2 Functional Block Diagram ... 24
8.3 Feature Description ... 25
8.4 Device Functional Modes ... 28
8.5 Register Maps ... 31
9 Application and Implementation ... 37
9.1 Application Information ... 37
9.2 Typical Application ... 37
10 Power Supply Recommendations ... 38
11 Layout ... 39
11.1 Layout Guidelines ... 39
11.2 Layout Example ... 39
12 Device and Documentation Support ... 40
12.1 Documentation Support ... 40
12.2 Community Resources ... 40
12.3 Trademarks ... 40
12.4 Electrostatic Discharge Caution ... 40
12.5 Glossary ... 40
13 Mechanical, Packaging, and Orderable Information ... 40

4 Revision History

Changes from Original (September 2015) to Revision A **Page**

- Changed *Features* From: Channel-to-Channel = ±1% (Typical) To: Channel-to-Channel = ±3% (Typical) ... 1
- Deleted device number TLC5929 From the *Electrical Characteristics* table ... 6
- Changed $\Delta I_{OL(C0)}$ Test Condition in *Electrical Characteristics* From: BC = 7Fh, R_{IREF} = 1.6 kΩ To: BC = 0Eh, R_{IREF} = 3.6 kΩ, ... 7
- Changed the $\Delta I_{OL(C1)}$ values in *Electrical Characteristics* From: TYP = ±2%, MAX = ±4% To TYP = 1% , MAX = ÷3%: ... 7
- Deleted device number TLC5929 From the *Switching Characteristics* table ... 8
- Changed text From: "with the 1-bit data" To: "with the 16-bit data" in the *Function Control Data Writing* section ... 34

Copyright © 2015–2016, Texas Instruments Incorporated

5 Pin Configuration and Functions

RGE Package
24-Pin VQFN
(Top View)

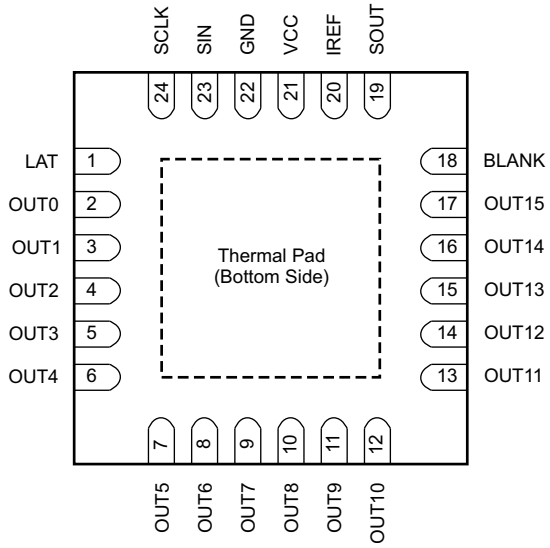

Pin Functions

PIN		I/O	DESCRIPTION
NAME	NO.		
BLANK	18	I	BLANK PIN, has two configures: When FC9(BLANK Mode) = 0, Blank pin worked as SOUT select pin: a. When BLANK = Low, SOUT is connected to the bit 7 of the 16-bit shift register, worked as 8ch device; b. When BLANK = High, SOUT is connected to the bit 15 of the 16-bit shift register, worked as 16ch device; When FC9(BLANK Mode) = 1, Blank pin worked as OUTPUT enable pin; a. When BLANK = Low, all constant current outputs are controlled by the on/off control data in the data latch. b. When BLANK = High, all OUTx are forced off
GND	22	—	Ground
IREF	20	I/O	Maximum current programming terminal. A resistor connected between IREF and GND sets the maximum current for every constant-current output. When this terminal is directly connected to GND, all outputs are forced off. The external resistor should be placed close to the device and must be in the range of 1.32 kΩ to 66 kΩ.
LAT	1	I	Data latch. The rising edge of LAT latches the data from the common shift register into the output on/off data latch. At the same time, the data in the common shift register are replaced with SID, which is selected by SIDLD. See the *Output On/Off Data Latch* section and *Status Information Data (SID)* section for more details.

Pin Functions (continued)

PIN		I/O	DESCRIPTION
NAME	NO.		
OUT0	2	O	Constant-current sink outputs. Multiple outputs can be configured in parallel to increase the constant-current capability. Different voltages can be applied to each output.
OUT1	3	O	
OUT2	4	O	
OUT3	5	O	
OUT4	6	O	
OUT5	7	O	
OUT6	8	O	
OUT7	9	O	
OUT8	10	O	
OUT9	11	O	
OUT10	12	O	
OUT11	13	O	
OUT12	14	O	
OUT13	15	O	
OUT14	16	O	
OUT15	17	O	
SCLK	24	I	Serial data shift clock. Data present on SIN are shifted to the LSB of the 16-bit shift register with the SCKI rising edge. Data in the shift register are shifted toward the MSB at each SCLK rising edge. The MSB data of the common shift register appear on SOUT.
SIN	23	I	Serial data input for the 16-bit common shift register. When SIN is high, a '1' is written to the LSB of the common shift register at the rising edge of SCLK.
SOUT	19	O	Serial data output of the 16-bit common shift register. When FC9(BLANK Mode) = 0 and BLANK = LOW; SOUT is connected to the bit 7 of the 16-bit shift register. Data are clocked out at the SCLK rising edge. In other case: SOUT is connected to the bit 15 of the 16-bit shift register. Data are clocked out at the SCLK rising edge.
VCC	21	—	Power-supply voltage

6 Specifications

6.1 Absolute Maximum Ratings

over operating free-air temperature range (unless otherwise noted) (1)

		VALUE		UNIT
		MIN	MAX	
Supply voltage, V_{CC} (2)		–0.3	6	V
Input voltage	SIN, SCLK, LAT, BLANK, IREF	–0.3	V_{CC} + 0.3	V
Output voltage	SOUT	–0.3	V_{CC} + 0.3	V
	OUT0 to OUT15	–0.3	11	V
Output current (DC)	OUT0 to OUT15		65	mA
Operating junction temperature, T_J (max)			150	°C
Storage temperature, T_{STG}		–55	150	°C

(1) Stresses beyond those listed under *Absolute Maximum Ratings* may cause permanent damage to the device. These are stress ratings only, which do not imply functional operation of the device at these or any other conditions beyond those indicated under *Recommended Operating Conditions*. Exposure to absolute-maximum-rated conditions for extended periods may affect device reliability.
(2) All voltages are with respect to device ground terminal.

Copyright © 2015–2016, Texas Instruments Incorporated

6.2 ESD Ratings

			VALUE	UNIT
$V_{(ESD)}$	Electrostatic discharge	Human-body model (HBM), per ANSI/ESDA/JEDEC JS-001 (1)	±4000	V
		Charged-device model (CDM), per JEDEC specification JESD22-C101 (2)	±2000	

(1) JEDEC document JEP155 states that 500-V HBM allows safe manufacturing with a standard ESD control process.
(2) JEDEC document JEP157 states that 250-V CDM allows safe manufacturing with a standard ESD control process.

6.3 Recommended Operating Conditions

At T_A= –40°C to 85°C, unless otherwise noted.

PARAMETER		TEST CONDITIONS		MIN	NOM	MAX	UNIT
DC Characteristics: V_{CC} = 3 V to 5.5 V							
V_{CC}	Supply voltage			3	3.3	5.5	V
V_O	Voltage applied to output	OUT0 to OUT15				10	V
V_{IH}	High-level input voltage	SIN, SCLK, LAT, BLANK		0.7 × V_{CC}		V_{CC}	V
V_{IL}	Low-level input voltage	SIN, SCLK, LAT, BLANK		GND		0.3 × V_{CC}	V
I_{OH}	High-level output current	SOUT				–2	mA
I_{OL}	Low-level output current	SOUT				2	mA
I_{OLC}	Constant output sink current	OUT0 to OUT15	3 V ≤ V_{CC} ≤ 3.6 V			40	mA
		OUT0 to OUT15	3.6 V < V_{CC} ≤ 5.5 V			50	mA
T_A	Operating free-air temperature range			–40		85	°C
T_J	Operating junction temperature range			–40		125	°C
AC Characteristics: V_{CC} = 3 V to 5.5 V							
$f_{CLK\ (SCLK)}$	Data shift clock frequency	SCLK				33	MHz
t_{WH0}	Pulse duration (see Figure 1 and Figure 3)	SCLK		10			ns
t_{WL0}		SCLK		10			ns
t_{WH1}		LAT		20			ns
t_{WH2}		BLANK		40			ns
t_{WL2}		BLANK		40			ns
t_{SU0}	Setup time (see Figure 1, Figure 3 and Figure 4)	SIN to SCLK↑		5			ns
t_{SU1}		LAT↑ to SCLK↑		200			ns
t_{SU2}		SCLK ↓to LAT↑		10			ns
t_{H0}	Hold time (see Figure 1, Figure 3, and Figure 13)	SIN to SCLK↑		3			ns
t_{H1}		LAT↑ to SCLK↑		10			ns
t_{H2}		LAT↑ to SCLK ↓		40			ns

6.4 Thermal Information

THERMAL METRIC (1)		TLC59291 RGE (VQFN) 24 PINS	UNIT
$R_{\theta JA}$	Junction-to-ambient thermal resistance	38.1	°C/W
$R_{\theta JC(top)}$	Junction-to-case (top) thermal resistance	45.3	
$R_{\theta JB}$	Junction-to-board thermal resistance	16.9	
ψ_{JT}	Junction-to-top characterization parameter	0.9	
ψ_{JB}	Junction-to-board characterization parameter	16.9	
$R_{\theta JC(bot)}$	Junction-to-case (bottom) thermal resistance	6.2	

(1) For more information about traditional and new thermal metrics, see the *IC Package Thermal Metrics* application report, SPRA953.

Copyright © 2015–2016, Texas Instruments Incorporated

6.5 Electrical Characteristics

At V_{CC} = 3 V to 5.5 V and T_A = –40°C to 85°C. Typical values at V_{CC} = 3.3 V and T_A = 25°C, unless otherwise noted.

PARAMETER		TEST CONDITIONS		MIN	TYP	MAX	UNIT
V_{OH}	High-level output voltage	I_{OH} = –2 mA at SOUT		V_{CC} – 0.4		V_{CC}	V
V_{OL}	Low-level output voltage	I_{OL} = 2 mA at SOUT				0.4	V
V_{LOD}	LED open detection threshold	All OUT*n* = on		0.25	0.30	0.35	V
V_{LSD0}	LED short detection threshold	All OUT*n* = on, detection voltage code = 0h		0.32 × V_{CC}	0.35 × V_{CC}	0.38 × V_{CC}	V
V_{LSD1}		All OUT*n* = on, detection voltage code = 1h		0.42 × V_{CC}	0.45 × V_{CC}	0.48 × V_{CC}	V
V_{LSD2}		All OUT*n* = on, detection voltage code = 2h		0.52 × V_{CC}	0.55 × V_{CC}	0.58 × V_{CC}	V
V_{LSD3}		All OUT*n* = on, detection voltage code = 3h		0.62 × V_{CC}	0.65 × V_{CC}	0.68 × V_{CC}	V
V_{IREF}	Reference voltage output	R_{IREF} = 1.3 kΩ		1.175	1.205	1.235	V
I_{IN}	Input current	V_{IN} = V_{CC} or GND at SIN, SCLK, LAT, and BLANK		–1		1	µA
I_{CC0}	Supply current (V_{CC})	SIN/SCLK/LAT = Low, BLANK = High, all OUT*n* = off, V_{OUTn} = 0.8 V, BC = 7Fh, R_{IREF} = open			2	3	mA
I_{CC1}		SIN/SCLK/LAT = Low, BLANK = High, all OUT*n* = off, V_{OUTn} = 0.8 V, BC = 7Fh, R_{IREF} = 3.6 kΩ (I_{OUT} = 18.3 mA target)			5	7	mA
I_{CC2}		SIN/SCLK/LAT/BLANK =Low, All OUT*n* = on, V_{OUTn} = 0.8 V, BC = 7Fh, R_{IREF} = 3.6 kΩ (I_{OUT} = 18.3 mA target)			5	7	mA
I_{CC3}		SIN/SCLK/LAT/BLANK =Low, All OUT*n* = on, V_{OUTn} = 0.8 V, BC = 0Eh, R_{IREF} = 1.6 kΩ (I_{OUT} = 2 mA target)			3	4	mA
I_{CC4}		SIN/SCLK/LAT/BLANK = Low, All OUT*n* = on, V_{OUTn} = 0.8 V, BC = 7Fh, R_{IREF} = 1.6 kΩ (I_{OUT} = 41.3 mA target)			9	11	mA
I_{CC5}		V_{CC} = 5 V, SIN/SCLK/LAT/BLANK = Low, All OUT*n* = on, V_{OUTn} = 0.8 V, BC = 7Fh, R_{IREF} = 1.3 kΩ (I_{OUT} = 50.8 mA target)			11	14	mA
I_{CC6}		V_{CC} = 5 V, SIN/SCLK/LAT/BLANK = Low, V_{OUTn} = 0.8 V, BC = 7Fh, R_{IREF} = 1.3 kΩ (I_{OUT} = 50.8 mA target), all output data off with power-save mode enabled			10	40	µA
$I_{OL(C0)}$	Constant output sink current (OUT0 to OUT15, see Figure 28)	All OUT*n* = on, V_{OUTn} = V_{OUTfix} = 0.8 V, BC = 7Fh, R_{IREF} = 1.6 kΩ		38.5	41.3	44.1	mA
$I_{OL(C1)}$		V_{CC} = 5 V, All OUT*n* = on, V_{OUTn} = V_{OUTfix} = 1 V, BC = 7Fh, R_{IREF} = 1.3 kΩ		47.3	50.8	54.3	mA
$I_{OL(KG0)}$	Output leakage current (OUT0 to OUT15, see Figure 28)	BLANK = high, V_{OUTn} = V_{OUTfix} = 10 V, R_{IREF} = 1.6 kΩ	T_J = 25°C			0.1	µA
$I_{OL(KG1)}$			T_J = 85°C(1)			0.2	µA
$I_{OL(KG2)}$			T_J = 125°C(1)		0.3	0.8	µA

(1) Not tested; specified by design.

Copyright © 2015–2016, Texas Instruments Incorporated

Electrical Characteristics (continued)

At V_{CC} = 3 V to 5.5 V and T_A = –40°C to 85°C. Typical values at V_{CC} = 3.3 V and T_A = 25°C, unless otherwise noted.

PARAMETER		TEST CONDITIONS	MIN	TYP	MAX	UNIT
$\Delta I_{O(LC0)}$	Constant-current error (channel-to-channel, OUT0 to OUT15)(2)	All OUT*n* = on, V_{OUTn} = V_{OUTfix} = 0.8 V, BC = 0Eh, R_{IREF} = 3.6 kΩ, T_A = 25°C		±3%	±6%	
$\Delta I_{OL(C1)}$	Constant-current error (device-to-device, OUT0 to OUT15)(3)	All OUT*n* = on, V_{OUTn} = V_{OUTfix} = 0.8 V, BC = 7Fh, R_{IREF} = 1.6 kΩ, T_A = 25°C		±1%	±3%	
$\Delta I_{OL(C2)}$	Line regulation(4)	All OUT*n* = on, V_{OUTn} = V_{OUTfix} = 0.8 V, BC = 7Fh, R_{IREF} = 1.6 kΩ		±0.1	±1	%/V
$\Delta I_{OL(C3)}$	Load regulation(5)	All OUT*n* = on, V_{OUTn} = 0.8 V to 3 V, V_{OUTfix} = 0.8 V, BC = 7Fh, R_{IREF} = 1.6 kΩ		±0.5	±3	%/V
T_{TEF}	Thermal error flag threshold	Junction temperature(1)	150	165	180	°C
T_{HYS}	Thermal error flag hysteresis	Junction temperature(1)	5	10	20	°C
T_{PTW}	Pre-thermal warning threshold	Junction temperature(1)	125	138	150	°C

(2) The deviation of each output from the average of OUT0 to OUT15 constant-current. Deviation is calculated by the formula:

$$\Delta\ (\%) = 100\ x\ \left[\frac{I_{OLC(n)}}{\left[\frac{\left(I_{OLC(0)} + I_{OLC(1)} + ... + I_{OLC(14)} + I_{OLC(15)} \right)}{16} \right]} - 1 \right].$$

(3) The deviation of the OUT0 to OUT15 constant-current average from the ideal constant-current value. Deviation is calculated by the formula:

$$\Delta\ (\%) = 100\ x\ \left[\frac{\left[\frac{\left(I_{OLC(0)} + I_{OLC(1)} + ... + I_{OLC(14)} + I_{OLC(15)} \right)}{16} \right]}{\text{Ideal Output Current}} - (\text{Ideal Output Current}) \right]$$

Ideal current is calculated by the formula: $I_{O(LC_IDEAL)} = 54\ x\ \left(\frac{1.20}{R_{IREF}} \right)$

(4) Line regulation is calculated by the formula:

$$\Delta\ (\%) = 100\ x\ \left[\frac{\left(I_{OLC(n)} \text{ at } V_{CC} = 5.5\ V \right) - \left(I_{OLC(n)} \text{ at } V_{CC} = 3\ V \right)}{2.5\ x\ \left(I_{OLC(n)} \text{ at } V_{CC} = 3\ V \right)} \right]$$

(5) Load regulation is calculated by the equation:

$$\Delta\ (\%) = 100\ x\ \left(\frac{\left(I_{OLC(n)} \text{ at } V_{OUTn} = 3\ V \right) - \left(I_{OLC(n)} \text{ at } V_{OUTn} = 1\ V \right)}{2\ x\ \left(I_{OLC(n)} \text{ at } V_{OUTn} = 1\ V \right)} \right)$$

Copyright © 2015–2016, Texas Instruments Incorporated

6.6 Switching Characteristics

At V_{CC} = 3 V to 5.5 V, T_A = –40°C to 85°C, C_L = 15 pF, R_L = 82 Ω, R_{IREF} = 1.3 kΩ, and V_{LED} = 5 V.
Typical values at V_{CC} = 3.3 V and T_A = 25°C, unless otherwise noted.

PARAMETER		TEST CONDITIONS	MIN	TYP	MAX	UNIT
t_{R0}	Rise time	At SOUT		10	15	ns
t_{R1}		At OUT*n*, BC = 7Fh		40	60	ns
t_{F0}	Fall time	At SOUT		10	15	ns
t_{F1}		At OUT*n*, BC = 7Fh		40	60	ns
t_{D0}	Propagation delay	SCLK↑ to SOUT↑↓		8	22	ns
t_{D1}		LAT↑ or BLANK↑↓ to OUT0 sink current on/off, BC = 7Fh		35	65	ns
t_{D2}		OUT*n* on/off to OUT*n* + 1 on/off, BC = 7Fh		2	6	ns
t_{D3}		LAT↑ to power-save mode by data writing for all output off			400	ns
t_{D4}		SCLK↑ to normal mode operation			100	µs
t_{D5}		BLANK↑↓ to SOUT↑↓ when BLANK MODE=0			100	ns
t_{ON_ERR}	Output on-time error(1)	Output on/off data = all '1', BLANK low pulse = 40 ns, BC = 7Fh	–30		20	ns
f_{OSC}	Internal oscillator frequency		12	20	28	MHz

(1) Output on-time error (t_{ON_ERR}) is calculated by the formula: t_{ON_ERR} (ns) = t_{OUT_ON} – 40 ns. t_{OUT_ON} is the actual on-time of OUT*n*.

Copyright © 2015–2016, Texas Instruments Incorporated

6.7 Timing Diagrams

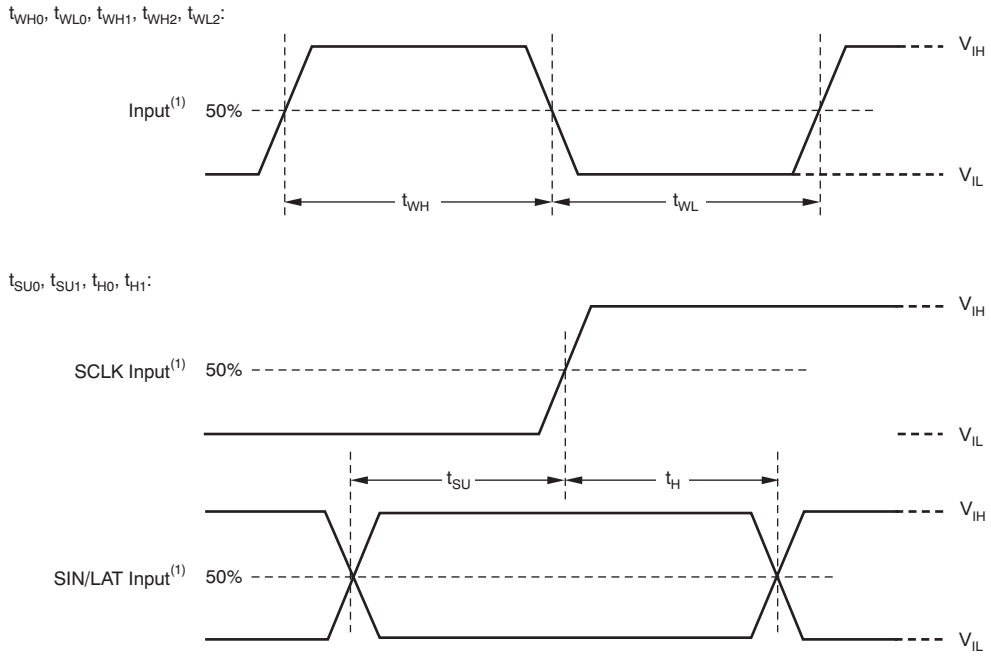

(1) Input pulse rise and fall time is 1 ns to 3 ns.

Figure 1. Input Timing

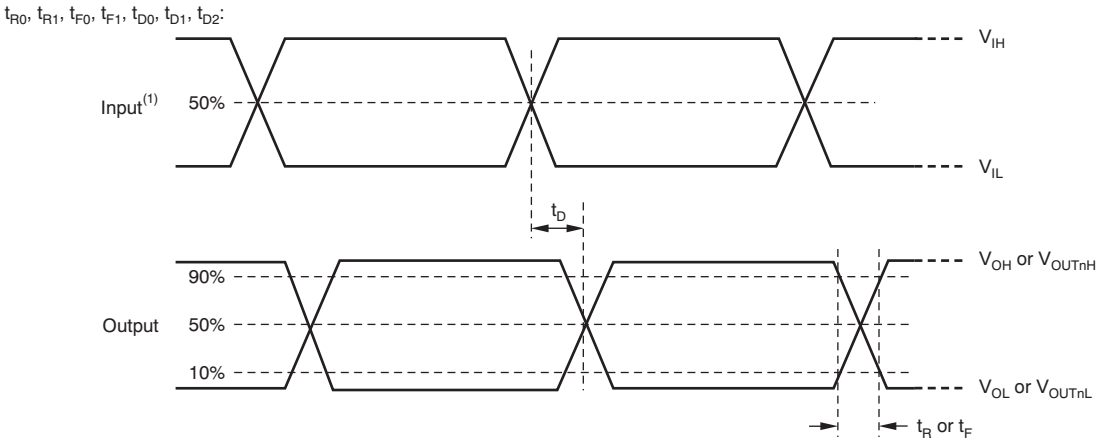

(1) Input pulse rise and fall time is 1 ns to 3 ns.

Figure 2. Output Timing

Timing Diagrams (continued)

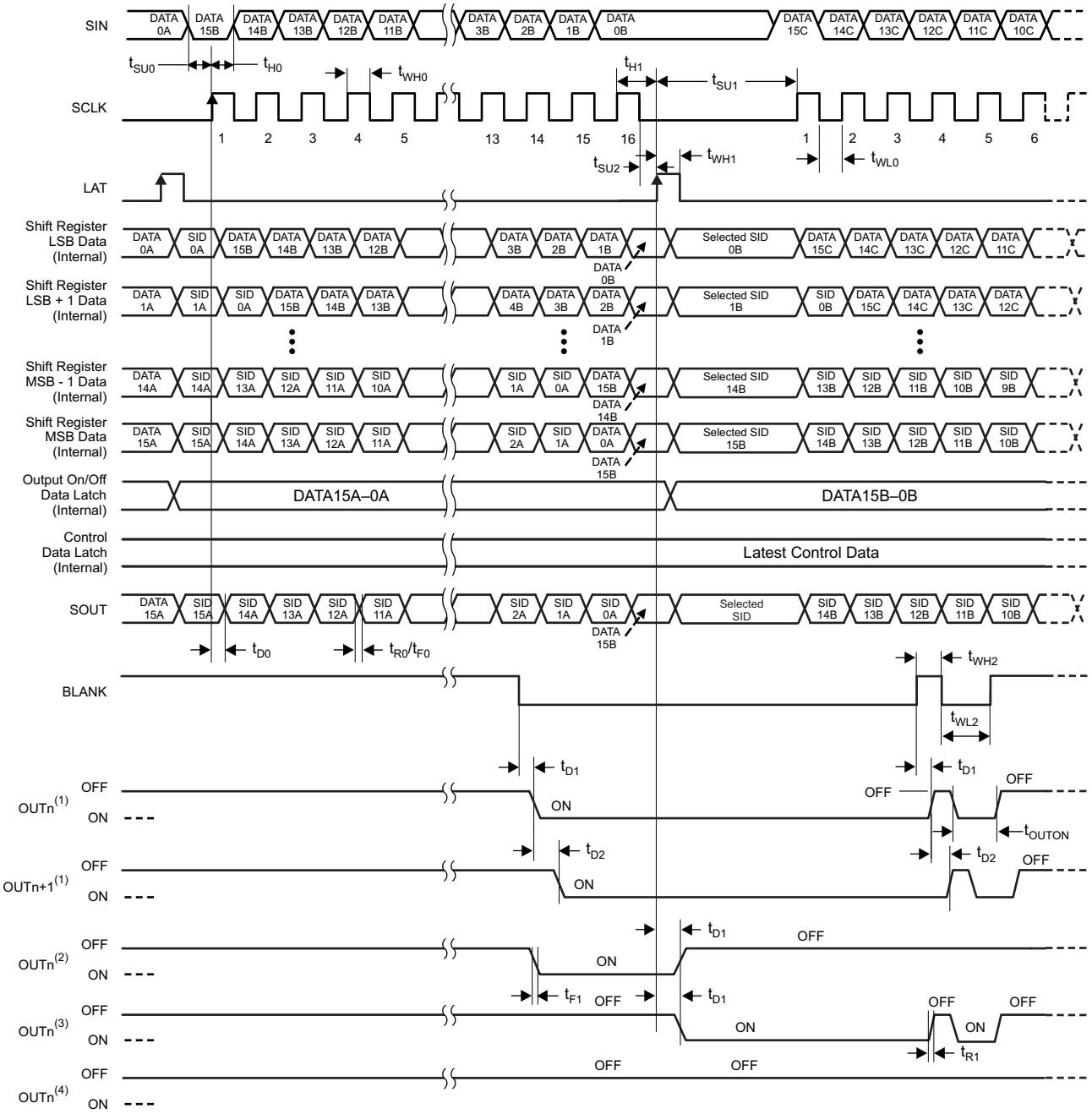

(1) On/off latched data is '1'.

(2) On/off latched data change from '1' to '0' at second LAT signal.

(3) On/off latched data change from '0' to '1' at second LAT signal.

(4) On/off latched data is '0'.

Figure 3. Write for ON/Off Data and Output Timing (BLANK Mode = 1)

Copyright © 2015–2016, Texas Instruments Incorporated

Timing Diagrams (continued)

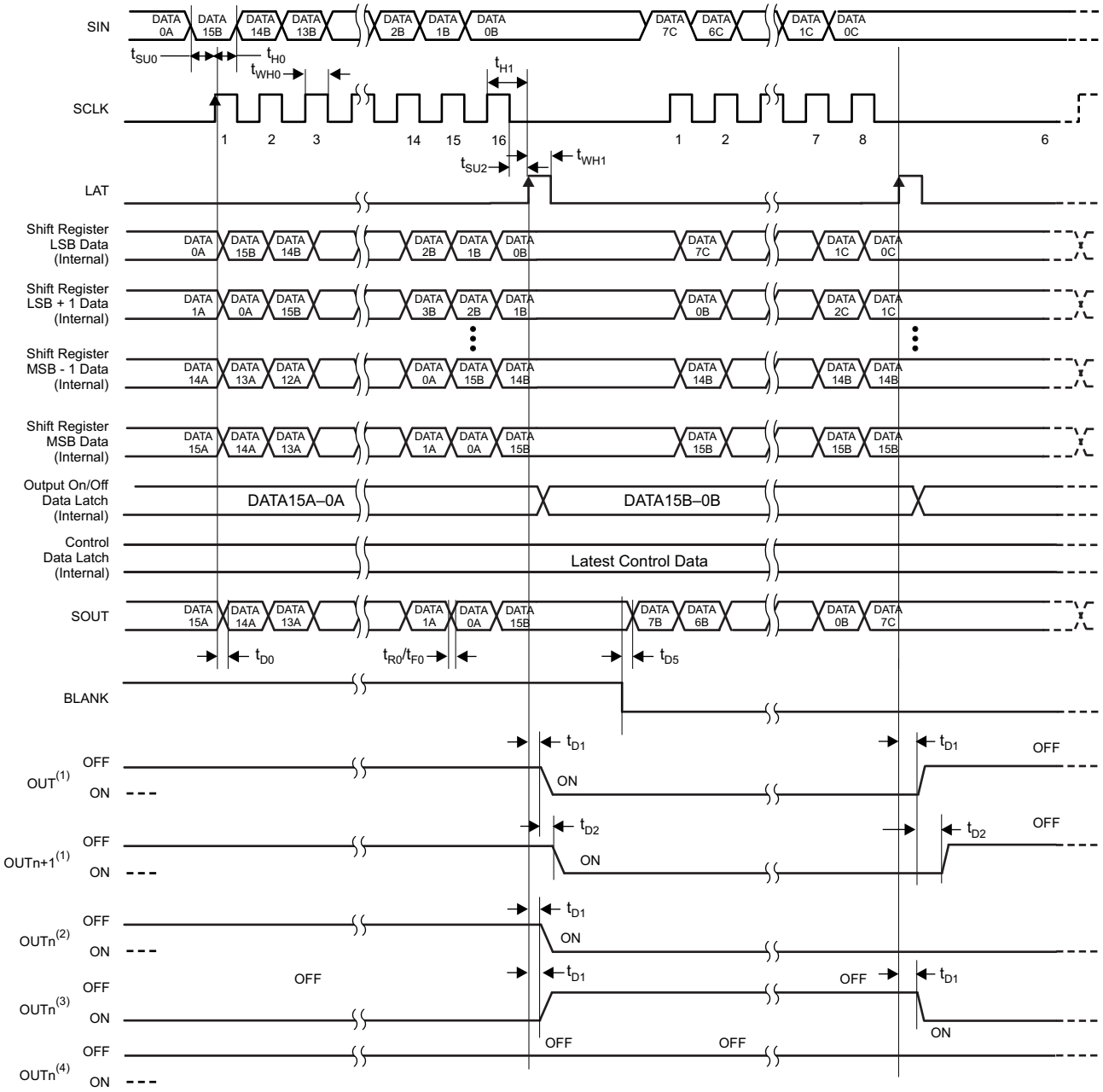

(1) If the on/off latched data is changed from “0” to “1” at 1’st LAT signal, changed from “1” to “0” at second LAT signal.

(2) If the on/off latched data is changed from “0” to “1” at 1’st LAT signal, changed from “1” to “1” at second LAT signal.

(3) If the on/off latched data is changed from “1” to “0” at 1’st LAT signal, changed from “0” to “1” at second LAT signal.

(4) if the on/off latched data is “0”.

Figure 4. Write for On/Off Data and Output Timing (BLANK Mode = 0)

Copyright © 2015–2016, Texas Instruments Incorporated

Timing Diagrams (continued)

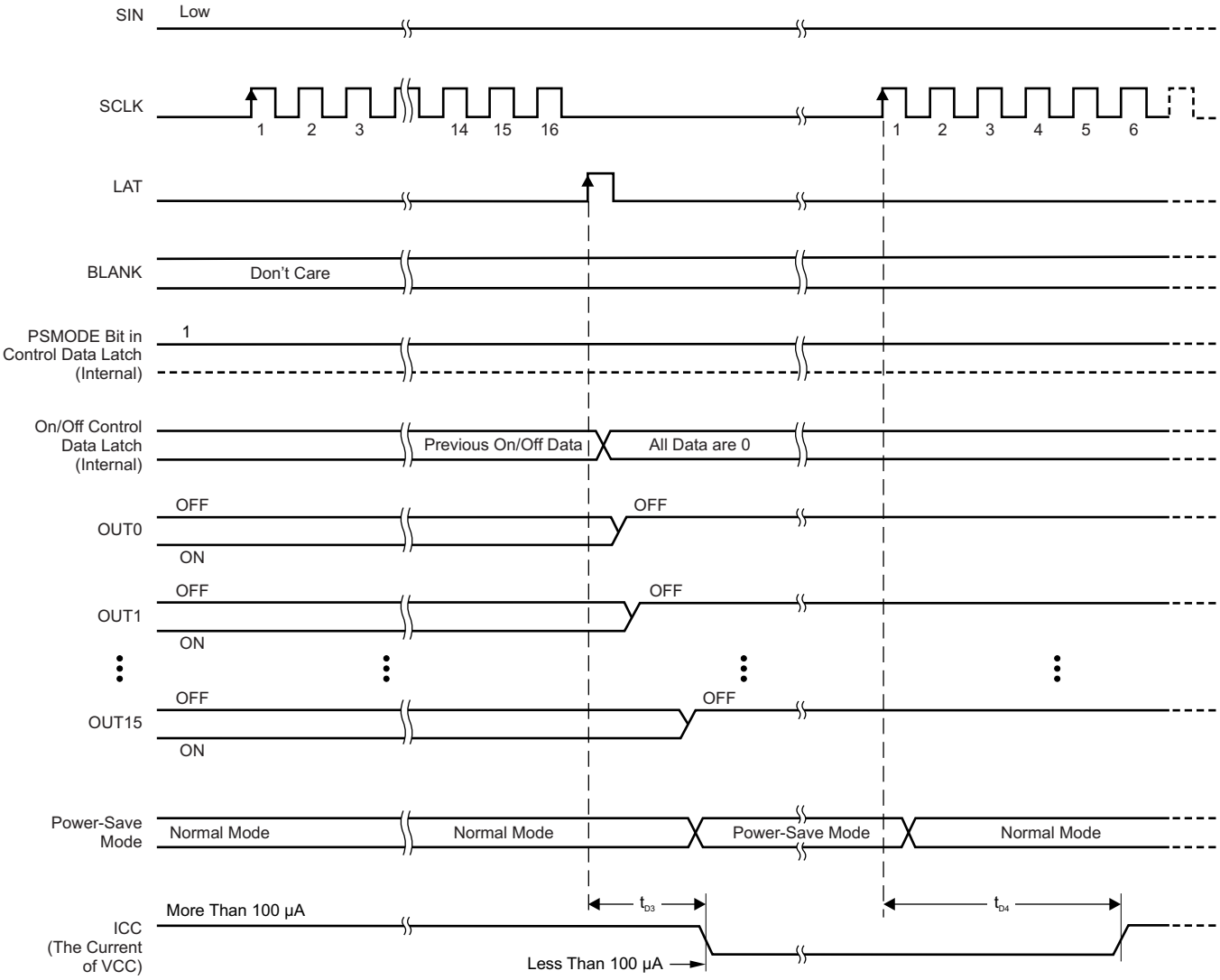

Figure 5. Power-Save Mode

Copyright © 2015–2016, Texas Instruments Incorporated

Timing Diagrams (continued)

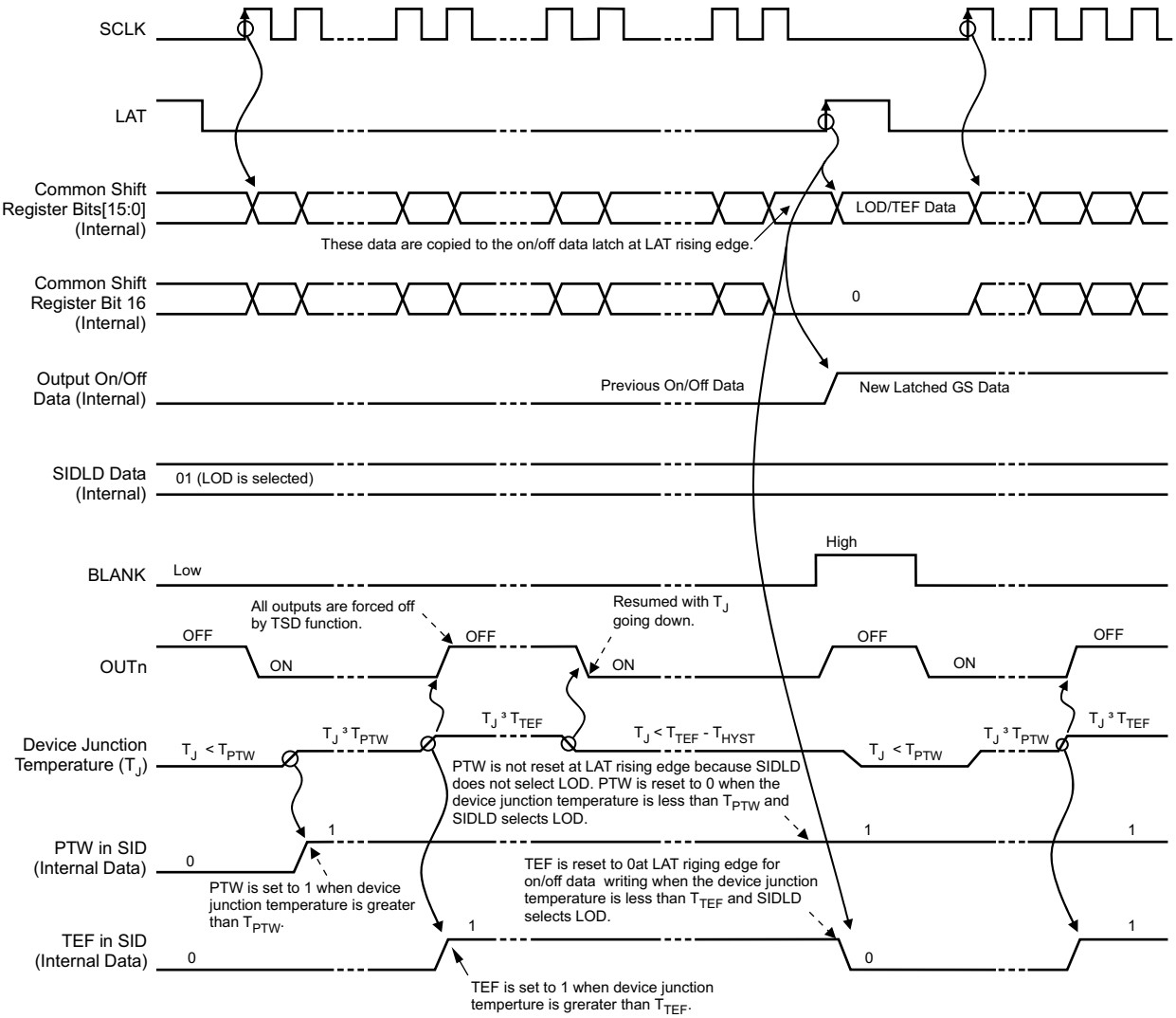

Figure 6. PTW/TEF/TSD Timing (LOD Selected)

Timing Diagrams (continued)

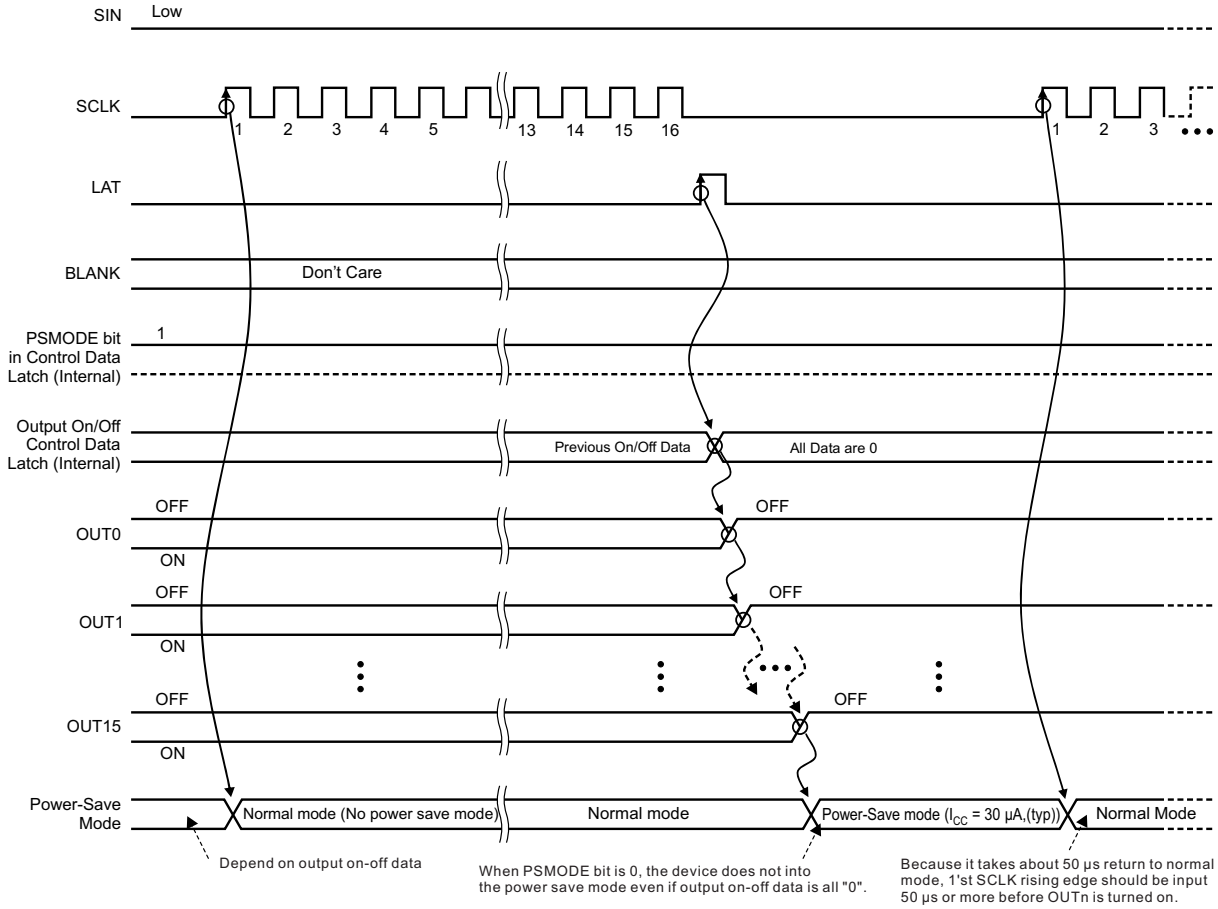

Figure 7. Power-Save Mode Timing

Copyright © 2015–2016, Texas Instruments Incorporated

Timing Diagrams (continued)

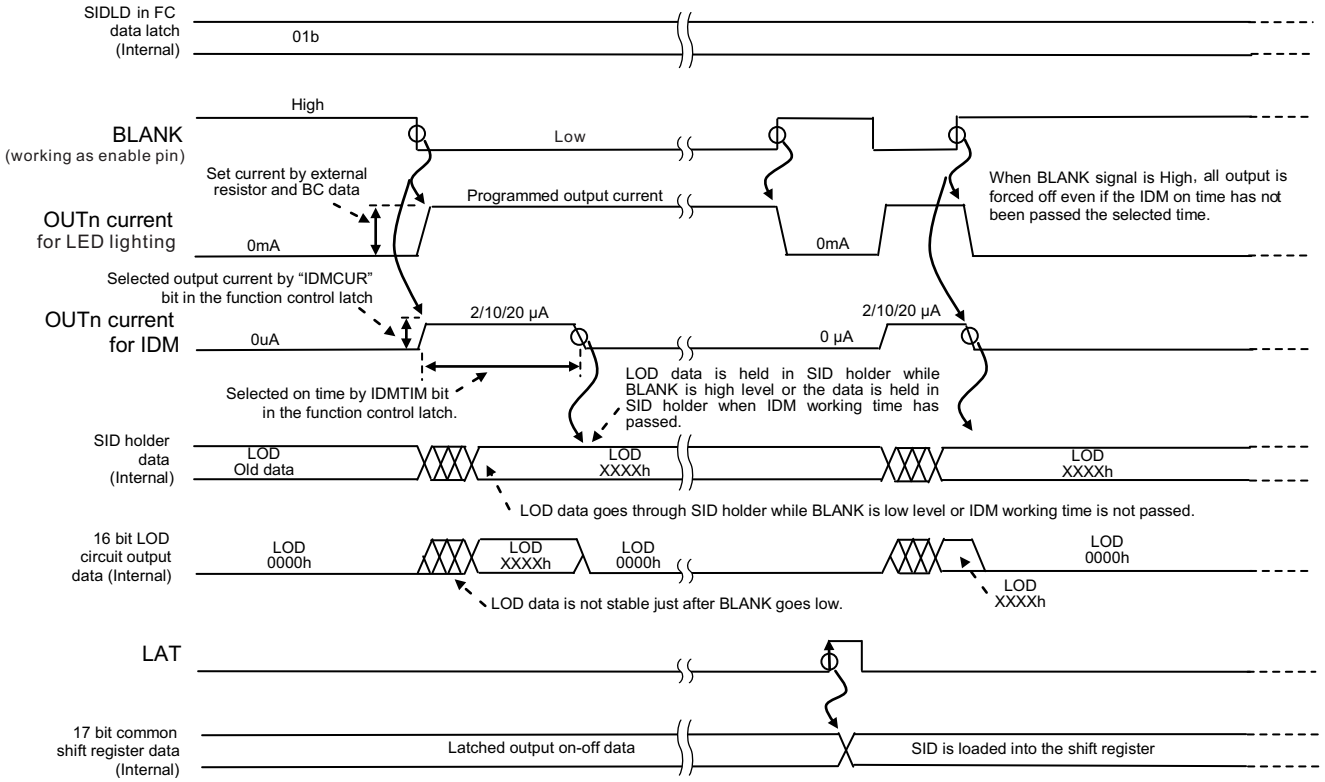

Figure 8. IDM Operation Timing with LOD Selected and IDM Enabled

Timing Diagrams (continued)

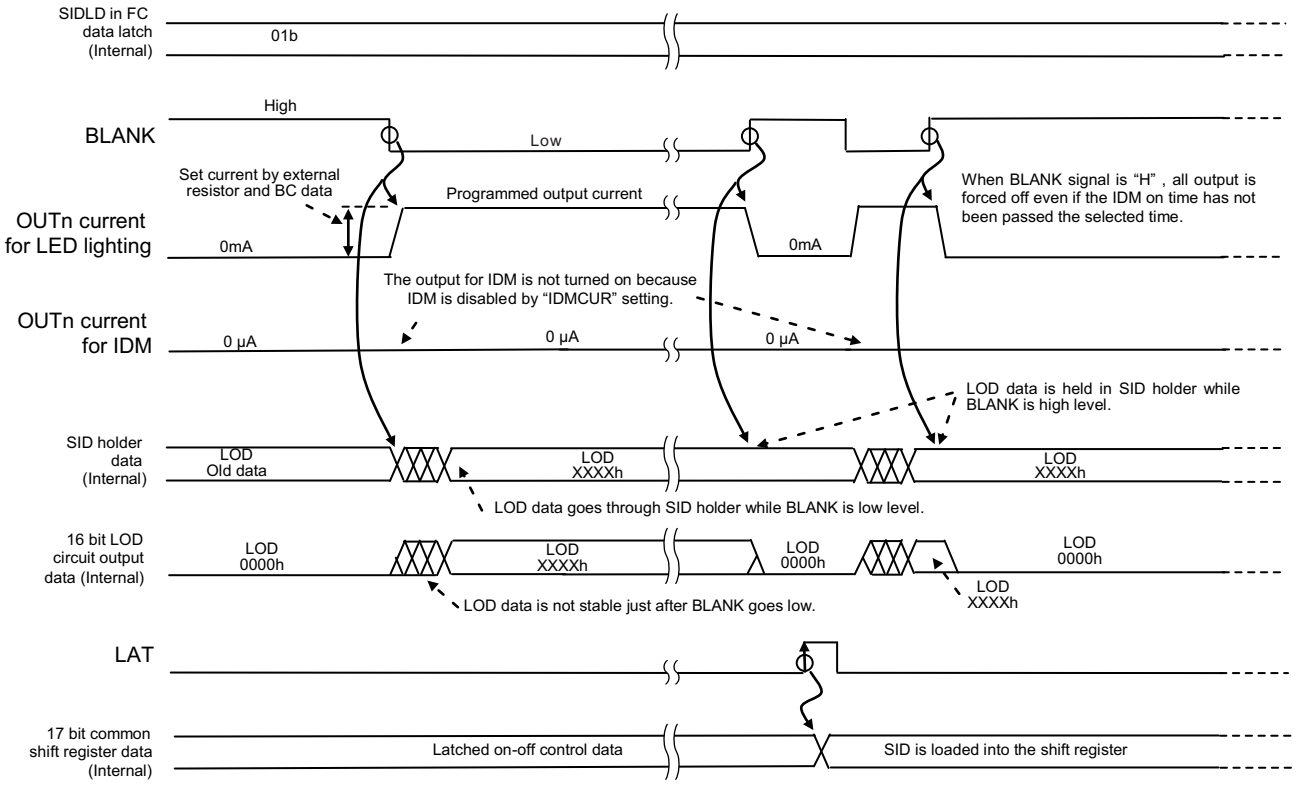

Figure 9. IDM Operation Timing with LOD Selected and IDM Disabled

Copyright © 2015–2016, Texas Instruments Incorporated

Timing Diagrams (continued)

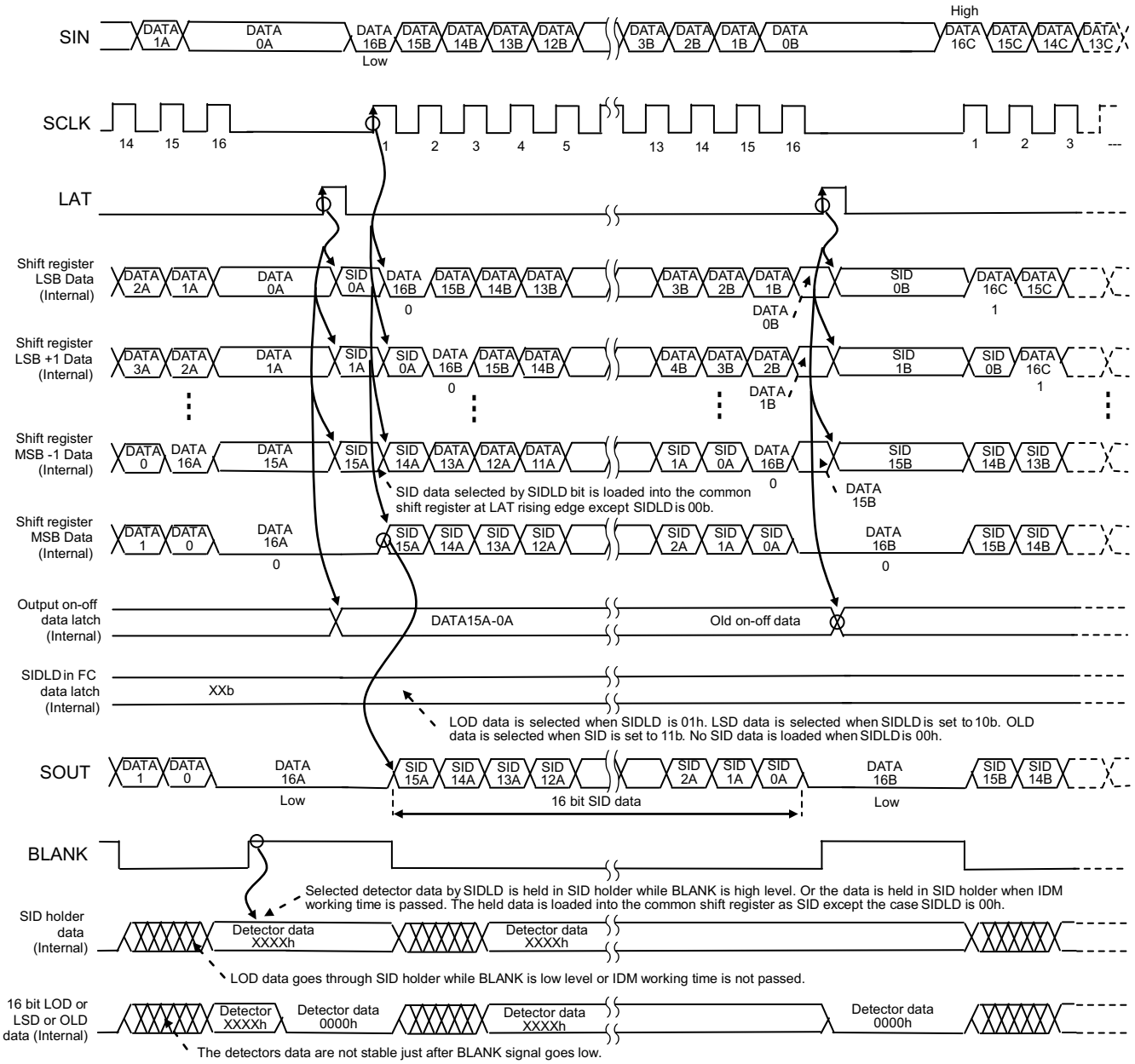

Figure 10. SID Read Timing

Timing Diagrams (continued)

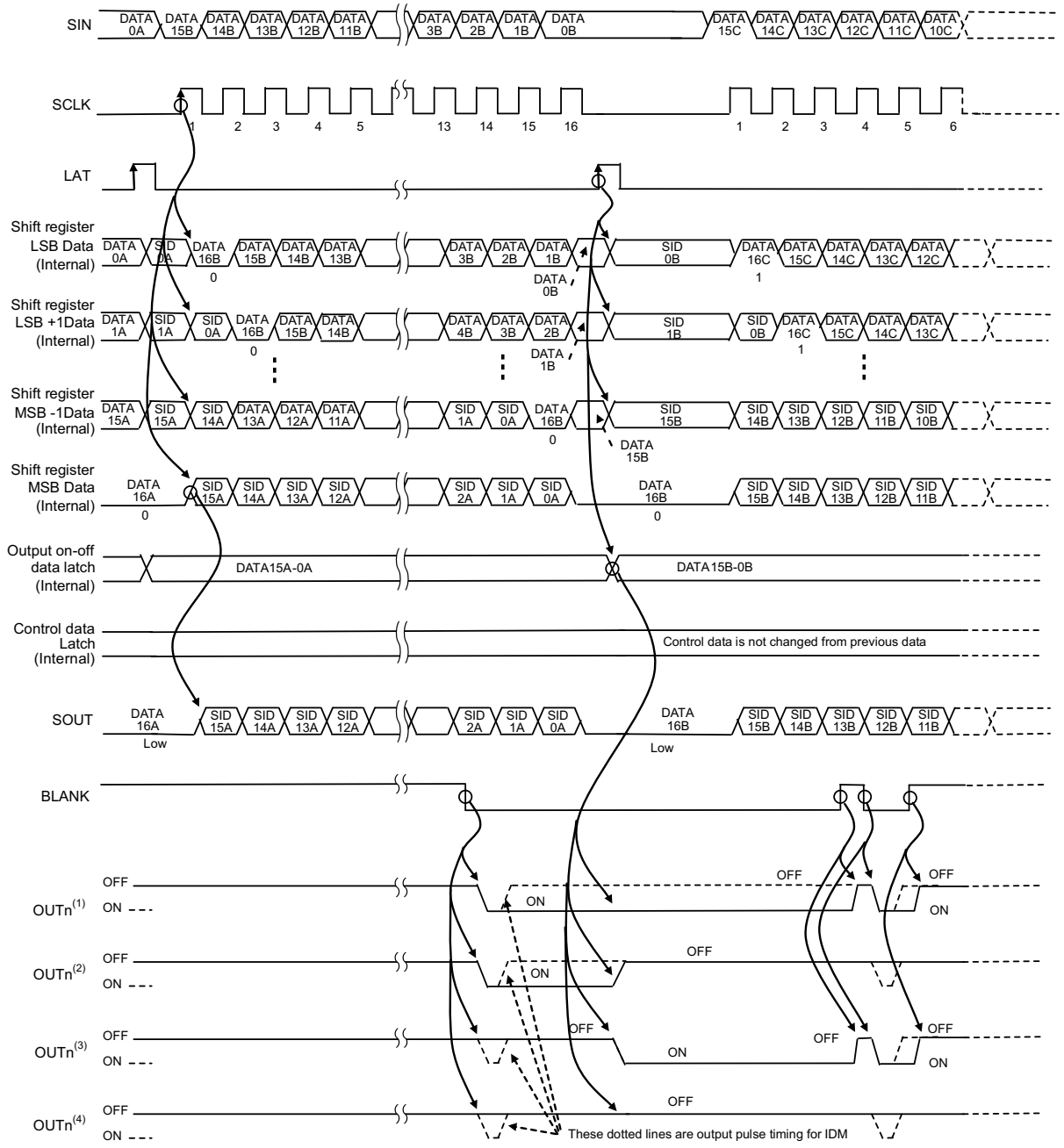

(1) On/off latch data is '1'.

(2) On/off latch data change from '1' to '0' at second LAT signal.

(3) On/off latch data is change from '0' to '1' at second LAT signal.

(4) On/off latch data is '0'.

Figure 11. On-Off Control Data Write Timing (BLANK Mode = 1)

Copyright © 2015–2016, Texas Instruments Incorporated

Timing Diagrams (continued)

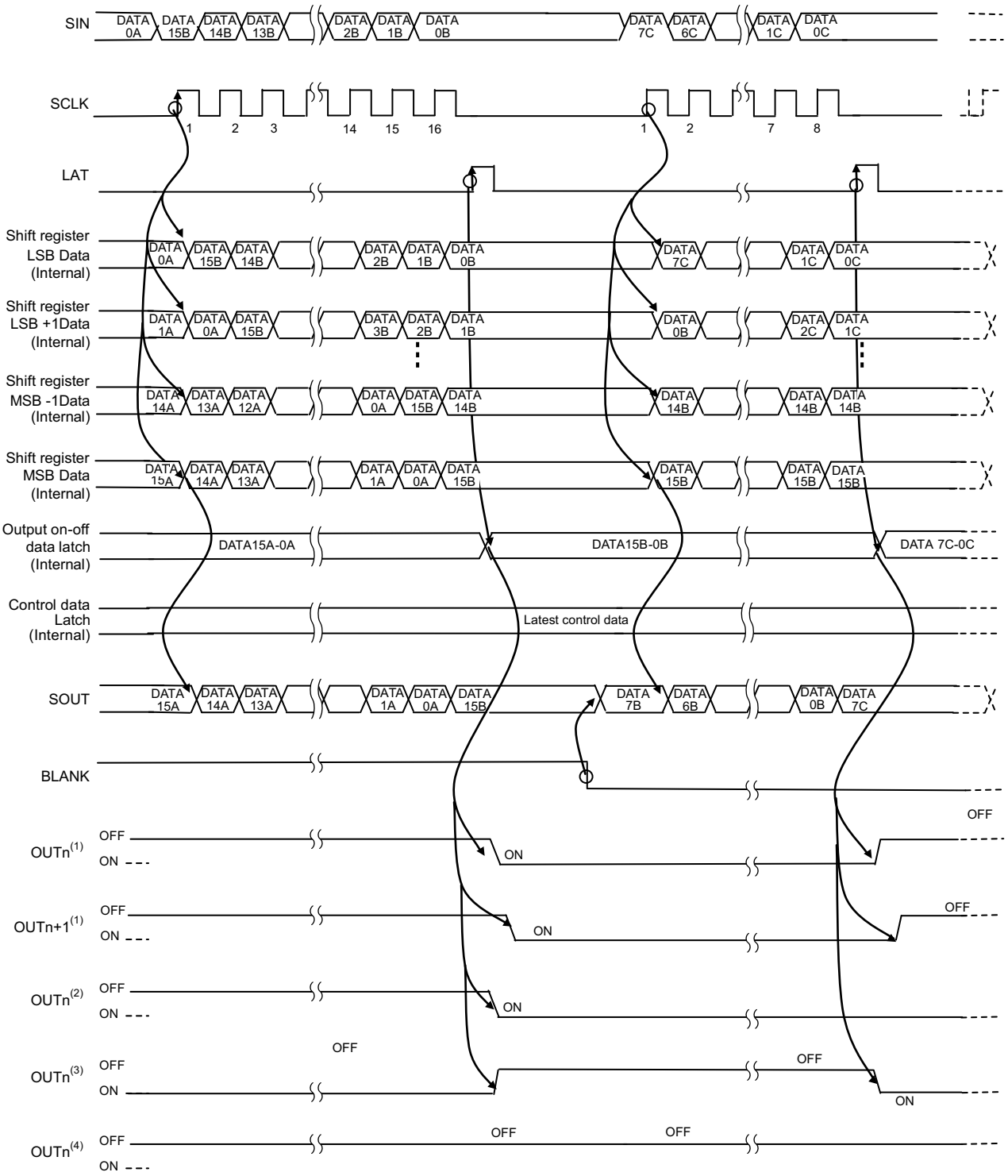

(1) If the on/off latched data is changed from “0” to “1” at 1’st LAT signal, changed from “1” to “0” at 2’nd LAT signal.

(2) If the on/off latched data is changed from “0” to “1” at 1’st LAT signal, changed from “1” to “1” at 2’nd LAT signal.

(3) If the on/off latched data is changed from “1” to “0” at 1’st LAT signal, changed from “0” to “1” at 2’nd LAT signal.

(4) If the on/off latched data is “0”.

Figure 12. On-Off Control Data Write Timing (BLANK Mode = 0)

Copyright © 2015–2016, Texas Instruments Incorporated

Timing Diagrams (continued)

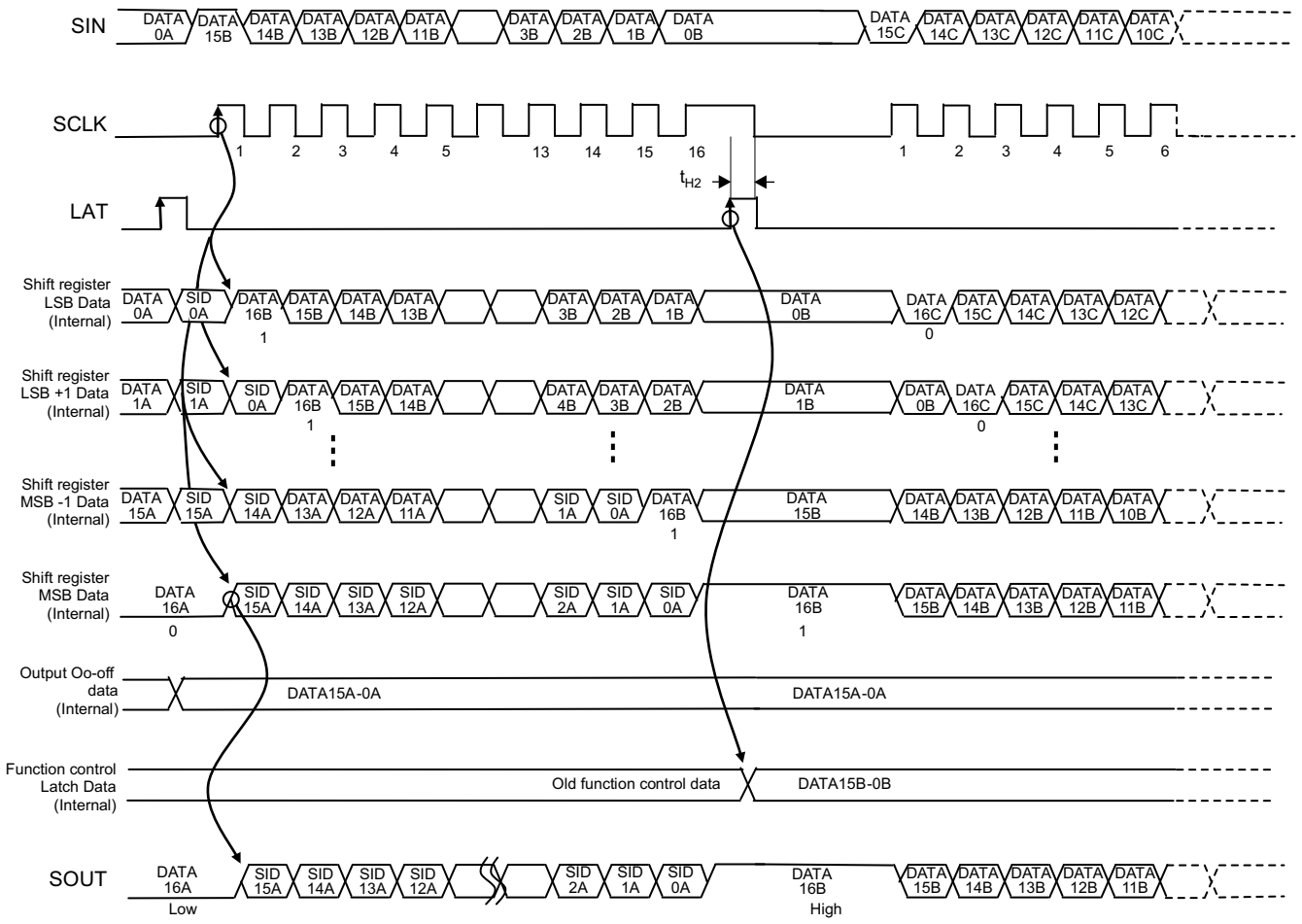

Figure 13. Function Control Data Write Timing

Copyright © 2015–2016, Texas Instruments Incorporated

6.8 Typical Characteristics

At T_A = 25°C, unless otherwise noted.

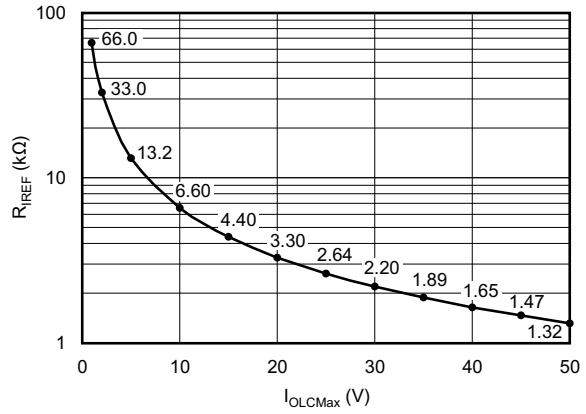

Figure 14. Reference Resistor vs Output Current

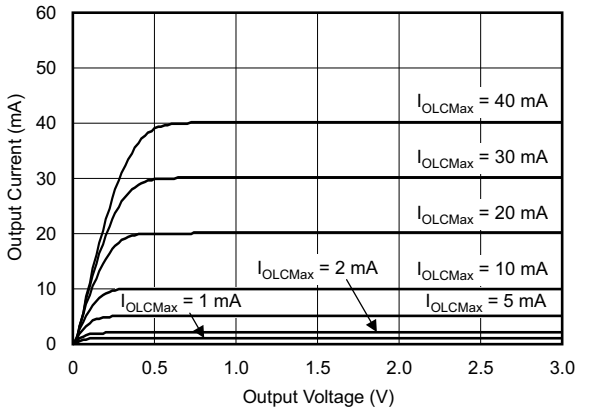

V_{CC} = 3.3 V BC = 7Fh V_{OUTn} = 0.8 V

Figure 15. OUT*n* Current vs Output Voltage

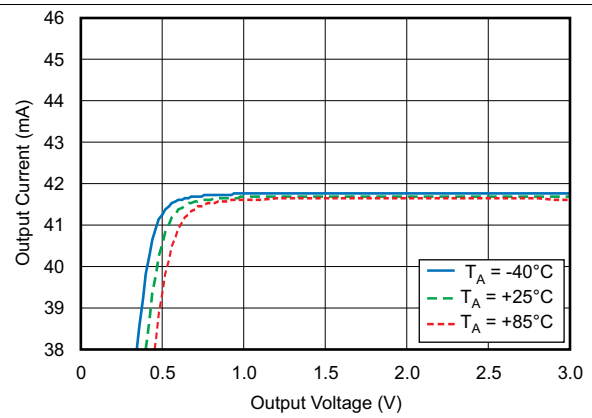

V_{CC} = 3.3 V BC = 7Fh R_{IREF} = 1.58 kΩ
V_{OUTn} = 0.8 V

Figure 16. OUT*n* Current vs Output Voltage

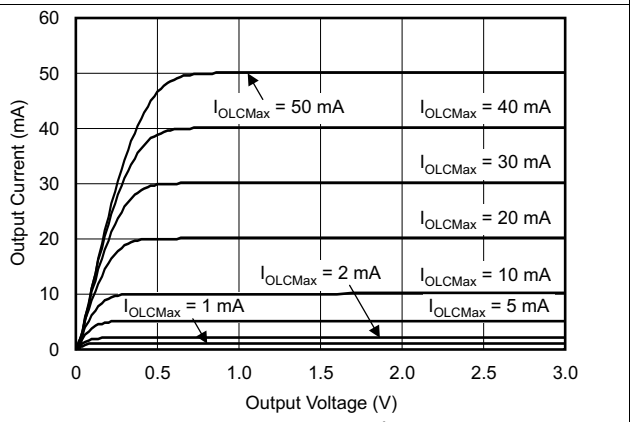

V_{CC} = 5 V BC = 7Fh V_{OUTn} = 0.8 V
50 mA = 1 V

Figure 17. OUT*n* Current vs Output Voltage

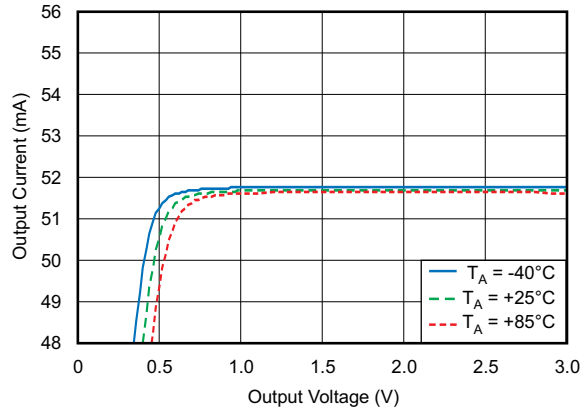

V_{CC} = 5 V BC = 7Fh R_{IREF} = 1.28 kΩ
V_{OUTn} = 1 V

Figure 18. OUT*n* Current vs Output Voltage

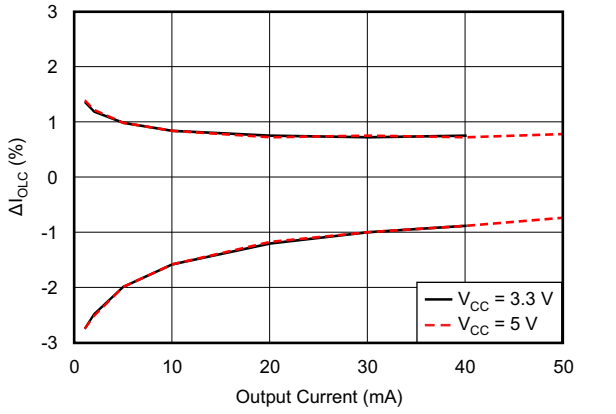

BC = 7Fh V_{OUTn} = 0.8 V 50 mA = 1 V

Figure 19. Constant-Current Error vs Output CurrenT set by R_{IREF} or BC Data (Channel-to-Channel)

Copyright © 2015–2016, Texas Instruments Incorporated

Typical Characteristics (continued)

At T_A = 25°C, unless otherwise noted.

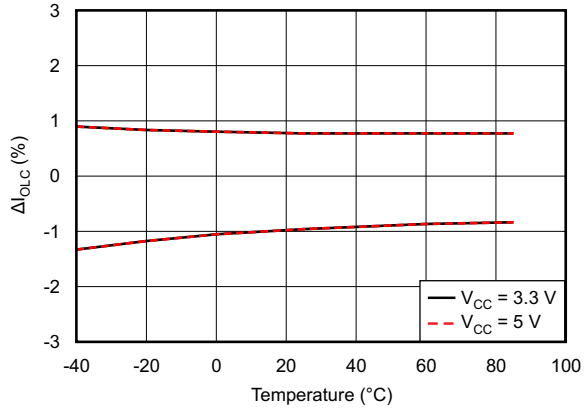

R_{IREF} = 1.28 kΩ V_{OUTn} = 0.8 V

Figure 20. Constant-Current Error vs Ambient Temperature (Channel-to-Channel)

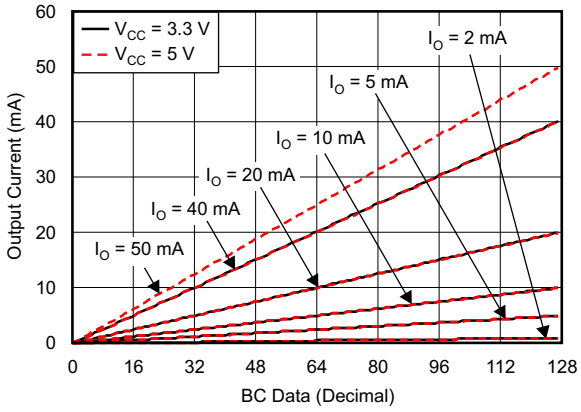

Figure 21. Global Brightness Control Linearity

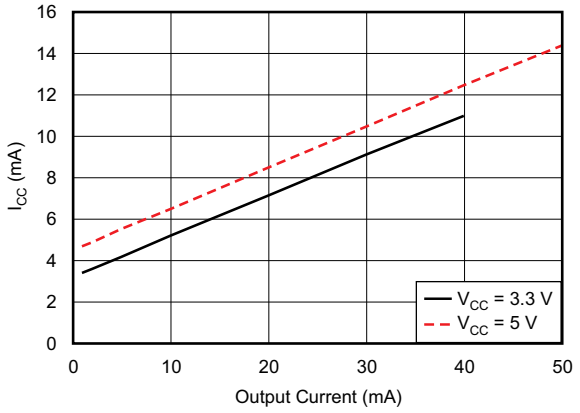

BC = 7Fh R_{IREF} = 1.6 kΩ SIN = 17.5 MHz
SCLK = 35 MHz All Outpts on

Figure 22. Supply Current vs Output Current Set by R_{IREF}

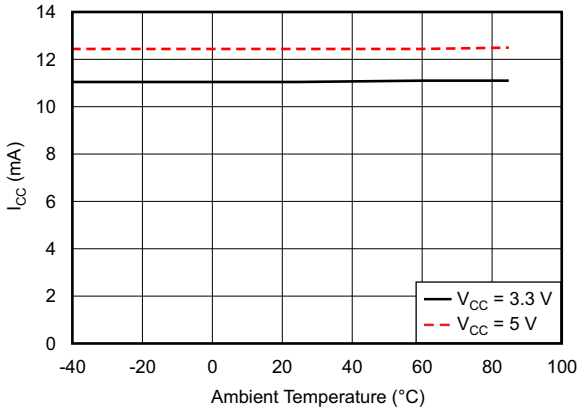

BC = 7Fh R_{IREF} = 1.6 kΩ SIN = 17.5 MHz
SCLK = 35 MHz All Outpts on

Figure 23. Supply Current vs Ambient Temperature

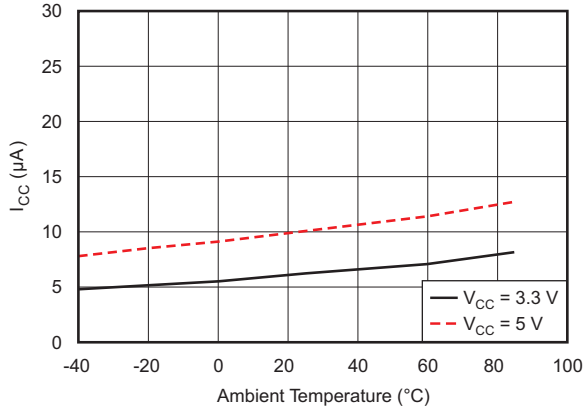

BC = 7Fh R_{IREF} = 1.6 kΩ SIN = SCLK = Low
Power-Save Mode

Figure 24. Supply Current in Power-Save Mode vs Ambient Temperature

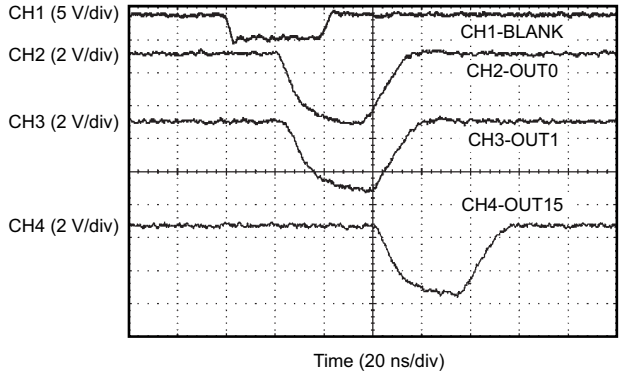

V_{CC} = 3.3 V BC = 7Fh R_{IREF} = 1.6 kΩ
V_{LED} = 5 V R_L = 100 Ω C_L = 15 pF

Figure 25. Constant-Current Output Voltage Waveform

Copyright © 2015–2016, Texas Instruments Incorporated

7 Parameter Measurement Information

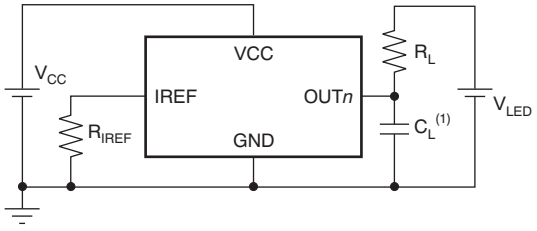

(1) C_L includes measurement probe and jig capacitance.

Figure 26. Rise Time and Fall Time Test Circuit for OUT*n*

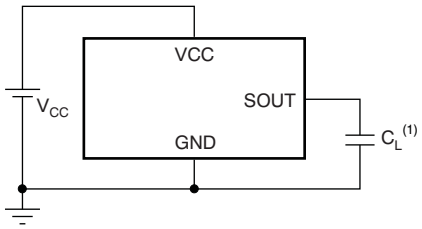

(1) C_L includes measurement probe and jig capacitance.

Figure 27. Rise Time and Fall Time Test Circuit for SOUT

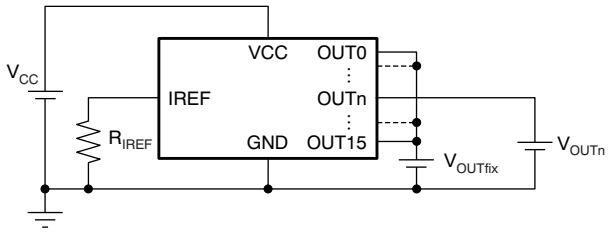

Figure 28. Constant-Current Test Circuit for OUT*n*

8 Detailed Description

8.1 Overview

The TLC59291 is a 8/16-channel constant current sink LED driver. Each channel can be turned on-off by writing data to an internal register. The constant current value of all 16 channels is set by a single external resistor and 128 steps for the global brightness control (BC).

The TLC59291 has six type error flags: LED open detection (LOD), LED short detection (LSD), output leak detection (OLD), reference terminal short detection (ISF), Pre thermal warning (PTW) and thermal error flag (TEF). In addition, the LOD and LSD functions have invisible detection mode (IDM) that can detect those errors even when the output is off. The error detection results can be read via a serial interface port.

8.2 Functional Block Diagram

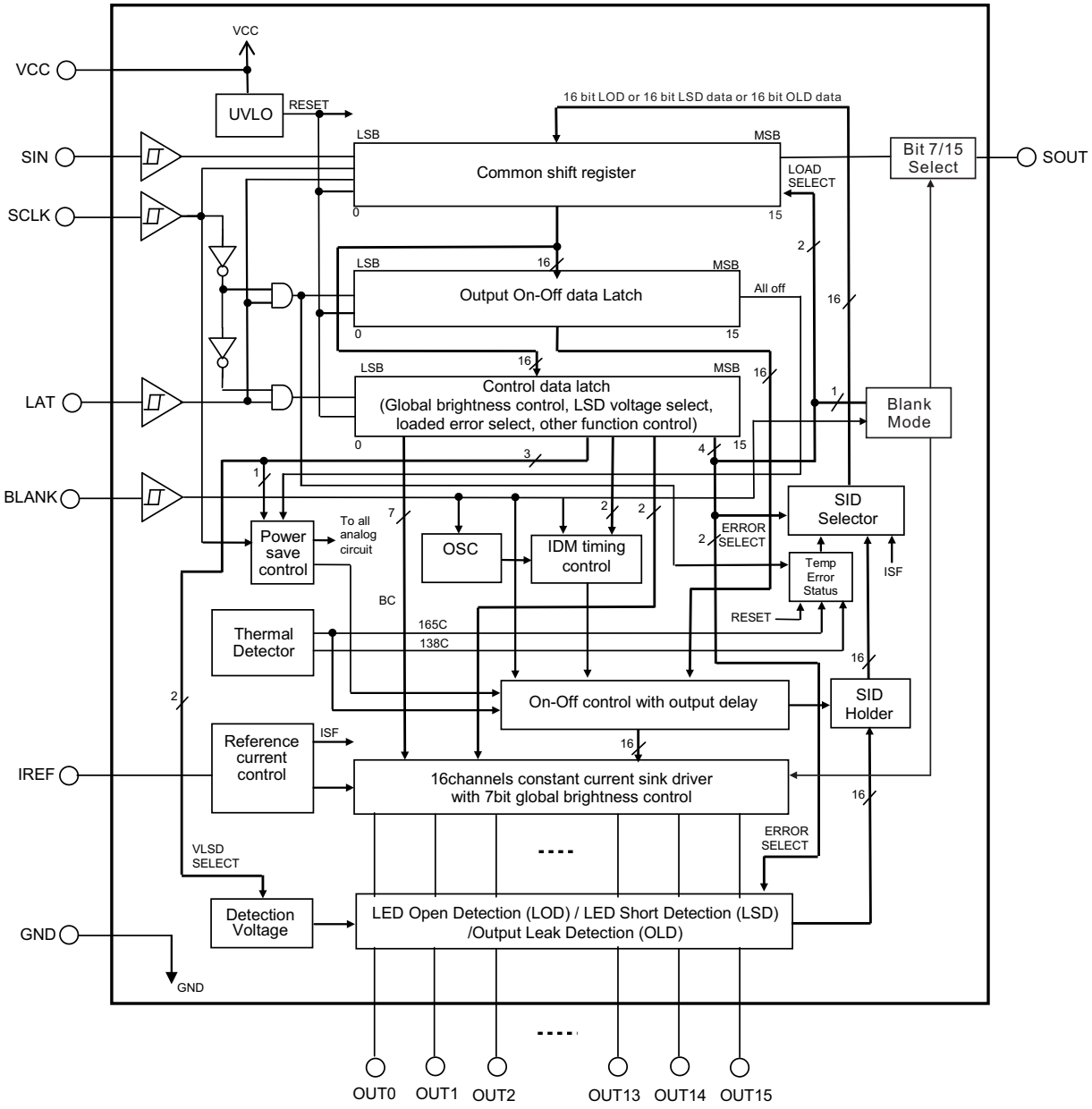

Copyright © 2015–2016, Texas Instruments Incorporated

8.3 Feature Description

8.3.1 Maximum Constant Sink Current

The maximum output current of each channel ($I_{O(LCmax)}$) is programmed by a single resistor (R_{IREF}) that is placed between the IREF and GND pins. The current value can be calculated by Equation 1:

$$R_{IREF}(K\Omega) = \frac{V_{IREF}(V)}{I_{O(CL\,max)}(mA)} \times 54.8 \quad (1)$$

Where:

V_{IREF} = the internal reference voltage on IREF (typically 1.205 V when the global brightness control data are at maximum.

$I_{O(LCmax)}$ = 1 mA to 40 mA (V_{CC} ≤ 3.6 V), or 1 mA to 50 mA (V_{CC} > 3.6 V) at OUT0 to OUT15 (BC = 7Fh)

$I_{O(LCmax)}$ is the highest current for each output. Each output sinks $I_{O(LCmax)}$ current when it is turned on with the maximum global brightness control (BC) data. Each output sink current can be reduced by lowering the global brightness control value. R_{IREF} must be between 1.32 kΩ and 66 kΩ to hold $I_{O(LCmax)}$ between 50 mA (typical) and 1 mA (typical). Otherwise, the output may be unstable. Output currents lower than 1 mA can be achieved by setting $I_{O(LCmax)}$ to 1 mA or higher and then using the global brightness control to lower the output current.

Figure 14 and Table 1 show the characteristics of the constant-current sink versus the external resistor, R_{IREF}.

Table 1. Maximum Constant Current Output versus External Resistor Value

$I_{O(LCmax)}$ (mA)	R_{IREF} (kΩ, typ)
50 (V_{CC} > 3.6 V only)	1.32
45 (V_{CC} > 3.6 V only)	1.47
40	1.65
35	1.89
30	2.20
25	2.64
20	3.30
15	4.40
10	6.60
5	13.2
2	33
1	66

Copyright © 2015–2016, Texas Instruments Incorporated

8.3.2 Global Brightness Control (BC) Function

The TLC59291 has the ability to adjust the output current of all constant current outputs simultaneously. This function is called *global brightness control* (BC). The global BC for all outputs (OUT0 to OUT15) can be set with a 7-bit word. The global BC adjusts all output currents in 128 steps from 0% to 100%. where 100% corresponds to the maximum output current set by R_{IREF}. Equation 2 calculates the actual output current. BC data can be set via the serial interface.

$$I_{O(LCn)}(mA) = \frac{I_{O(LCmax)}(mA) \times BC}{127d}$$

Where:

$I_{O(LCmax)}$ = the maximum constant-current value for each output determined by R_{IREF}.
BC = the global brightness control value in the control data latch (0h to 127d) (2)

Table 2 shows the BC data versus the constant-current ratio against $I_{O(LCmax)}$.

Table 2. BC Data versus Constant-Current Ratio Against $I_{O(LCmax)}$

BC DATA			RATIO OF OUTPUT CURRENT TO $I_{O(LCmax)}$ (%)	$I_{O(LC)}$ (mA, $I_{O(LCmax)}$= 40mA, typ)	$I_{O(LC)}$ (mA, $I_{O(LCmax)}$= 1mA, typ)
BINARY	DECIMAL	HEX			
000 0000	0	00	0	0	0
000 0001	1	01	0.8	0.31	0.01
000 0010	2	02	1.6	0.63	0.02
. . .	. . .	. . .	. . .	. . .	. . .
111 1101	125	7D	98.4	39.4	0.98
111 1110	126	7E	99.2	39.7	0.99
111 1111	127	7F	100.0	40.0	1.00

8.3.3 Thermal Shutdown (TSD) and Thermal Error Flag (TEF)

The thermal shutdown (TSD) function turns off all constant-current outputs when the junction temperature (T_J) exceeds the threshold (T_{TEF} = 165°C, typical) and sets all LOD data bit to '1'. When the junction temperature drops below (T_{TEF} – T_{HYST}), the output control starts. The TEF is remains '1' until LAT is input even if low temperature. Figure 6 shows a timing diagram and Table 3 shows a truth table for TEF.

8.3.4 Pre-Thermal Warning (PTW)

The PTW function indicates that the IC junction temperature is high. The PTW is set and all LSD data bit are set to "1" while the IC junction temperature exceeds the temperature threshold (T_{PTW} = 138 °C, typical). Then OUT*n* are not forced off. When the PTW is set, the IC temperature should be reduced by lowering the power dissipated in the driver to avoid a forced shutdown by the thermal shutdown circuit. This reduction can be accomplished by lowering the values of the BC data. When the IC junction temperature decreases below the temperature of T_{PTW}, PTW is reset. Figure 6 shows a timing diagram and Table 3 shows a truth table for PTW.

Copyright © 2015–2016, Texas Instruments Incorporated

8.3.5 Current Reference Terminal – IREF Terminal - Short Flag (ISF)

The ISF function indicates that IREF terminal is short to GND with low impedance. When IREF is set, all OLD data bit is set to “1”. Then all outputs (OUT*n*) are forced off and remain off until the short is removed. Table 3 shows the truth table for ISF.

Table 3. TEF/PTW/ISF Truth Table

TEF	PTW	ISF	CORRESPONDING DATA BITS IN SID
Device temperature is lower than high-side detect temperature (temperature ≤ T_{TEF})	Device temperature is lower than pre-thermal warning temperature (temperature ≤ T_{PTW})	IREF terminal is not shorted	Depends on LOD/LSD/OLD
Device temperature is higher than high-side detect temperature and all outputs are forced off (temperature >T_{TEF})	Device temperature is higher than pre-thermal warning temperature (temperature > T_{PTW})	IREF terminal is shorted to GND with low impedance and all outputs (OUT0 to OUT15) are forced off	SID is all 1s for TEF when SIDLD bit = '01'. SID is all 1s for PTW when SIDLD = '10'. SID is all 1s for ISF when SIDLD = '11'.

8.3.6 Noise Reduction

Large surge currents may flow through the IC and the board on which the device is mounted if all 16 outputs turn on simultaneously when BLANK goes low or on-off data changes at LAT rising edge with BLANK low. These large current surges could induce detrimental noise and electromagnetic interference (EMI) into other circuits. The TLC59291 turns the outputs on in 2ns series delay for each output to provide a circuit soft-start feature.

Copyright © 2015–2016, Texas Instruments Incorporated

8.4 Device Functional Modes

8.4.1 Blank Mode Selection (BLKMS)

The device has two configuration for BLANK pin, which is decided by BIT[9] in FC register. When BLANK mode = 1, the device is in ENABLE mode, BLANK pin is worked as OUTPUT enable pin: when BLANK=Low, all constant current outputs are controlled by the on/off control data in the data latch; when BLANK=High, all OUTx are forced off.

When BLANK mode = 0, the device is in SOUT mode, BLANK pin is worked as SOUT select pin; when BLANK= Low, SOUT is connected to the bit7 of the 16-bit shift register, worked as 8 channel device; when BLANK= High, SOUT is connected to the bit15 of the 16-bit shift register, worked as 16ch device. If device is already in ENABLE mode and we want to switch to SOUT mode, the new FC data with BIT[9]=0 must be input. Then it enter SOUT mode.

If device is already in SOUT mode and the user wants to switch to ENABLE mode. First make sure BLANK pin is high, SOUT is connected with bit15 of common shift register. Then input the new FC data with BIT[9] = 1. The device enters ENABLE mode

When the IC is powered on, SOUT mode is selected as default value. Refer to table 7 for detail.

8.4.2 Power-Save Mode

In this mode, the device dissipation current becomes 30 µA (typical). When “PSMODE” bit is ‘1’, the power save mode is enabled. Then if LAT rising edge is input to write all ‘0’ data into the output on-off data latch or to write any data into the control data latch when the on-off data latch are all ‘0’, TLC5929 goes into the power save mode. When SCLK rising edge is input, the device returns to normal operation. The power-save mode timing is shown in Figure 7.

8.4.3 LED Open Detection (LOD)

LOD detects the fault caused by LED open circuit or a short from OUT*n* to ground by comparing the OUT*n* voltage to the LOD detection threshold voltage level (V_{LOD} = 0.3 V typical). If the OUT*n* voltage is lower than V_{LOD}, that output LOD bit is set to '1' to indicate an open LED. Otherwise, the LOD bit is set to '0'. LOD data are only valid for outputs programmed to be on. LOD data for outputs programmed to be off are always '0' (Table 11).

The LOD data are stored into a 16-bit register called SID holder at BLANK rising edge when “SIDLD” bits is set to ‘01b’ (Table6) or when *Invisible Detection Mode (IDM)* is enabled, the LOD data are stored to SID holder at the end timing of IDM working time.

The stored LOD data can be read out through the common shift register as *Status Information Data (SID)* from SOUT pin. LOD/LSD data are not valid until 0.5 µs after the falling edge of BLANK.

8.4.4 LED Short Detection (LSD)

LSD data detects the fault caused by a shorted LED by comparing the OUT*n* voltage to the LSD detection If the OUT*n* voltage is higher than the programmed voltage, that output LSD bit is set to '1' to indicate a shorted LED. Otherwise, the LSD bit is set to'0'. LSD data are only valid for outputs programmed to be on. LSD data for outputs programmed to be off are always '0' (Table 4).

The LSD data are stored into a 16-bit register called SID holder at BLANK rising edge when “SIDLD” bits is set to ‘10b’ (Table6) or when *Invisible Detection Mode (IDM)* is enabled, the LSD data are stored to SID holder at the end timing of IDM working time. The stored LSD data can be read out through the common shift register as *Status Information Data (SID)* from SOUT pin. LOD/LSD data are not stabled until 0.5 µs after the falling edge of BLANK. Therefore, BLANK must be low for at least that time.

The LSD need to be executed after propagation delay, “t_{d4}” or more from the device operation resumed from the power save mode because LOD does not work during the power save mode.

Copyright © 2015–2016, Texas Instruments Incorporated

Device Functional Modes (continued)

8.4.5 Invisible Detection Mode (IDM)

Invisible Detection Mode (IDM) is the mode which can detect LOD and LSD when output on-off data is set to off state. When “IDMCUR” bit in the control data latch are set any data except “00b”, OUT*n* start to sink the current set by the “IDMCUR” bit at BLANK falling edge and OUTn stop to sink the current at BLANK rising signal or the time set by “IDMTIM” has passed. When OUTn is stopped, the selected SID data by “SIDLD” bit are latched to into SID holder.

When IDM mode is enabled, OLD is always set to disable. When “IDMCUR” bit in the control data latch is set “00b”, OUTn doesn’t start to sink the current set. Figure 29 shows LOD/LSD/OLD/IDM circuit. Figure 8 shows IDM operation timing and Table 5 shows a truth table for LOD/LSD/OLD.

IDM can only be working when FC[9] = 1.

8.4.6 Output Leakage Detection (OLD)

Output leak detection (OLD) detects a fault caused by OUT*n* is short to GND with high resistance by comparing the OUT*n* voltage to the LSD detection threshold voltage when output on-off data is set to off state. Also OLD can detect the short between adjacent pins. Small current is sourced from OUT*n* turned off to LED to detect LED leaking when “SIDLD” bit are ‘11b’ and BLANK is low. OLD operation is disabled when SIDLD bit are set any data except “11b” and then the sourced current is stopped. Also OLD is disabled when *Invisible Detection Mode (IDM)* is enabled. If the OUT*n* voltage is lower than the programmed LSD threshold voltage, that output OLD bit is set to '1' to indicate a leaking LED. Otherwise, the OLD bit is set to '0'. OLD result is valid for outputs programmed to off only. The OLD data is latched into SID holder when BLANK goes high. OLD data for outputs not programmed to off are always '0'. The OLD need to be executed after propagation delay, “td4” or more from the device operation resumed from the power save mode because OLD does not work during the power save mode.

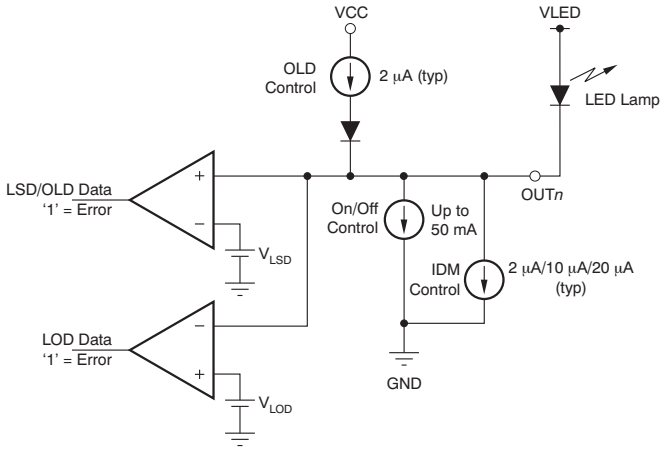

Figure 29. LOD/LSD/OLD/IDM Circuit

8.4.7 Status Information Data (SID)

The status information data (SID) contains the status of the *LED Open Detection (LOD)*, *LED Short Detection (LSD)*, *Output Leakage Detection (OLD)*, *Pre-Thermal Warning (PTW)*, Thermal Shutdown (TSD) and Thermal Error Flag (TEF) and *Current Reference Terminal – IREF Terminal - Short Flag (ISF)*. The loaded SID data can be selected by “SIDLD” bits in the control data latch. When the MSB of the common shift register is set to '0', the selected SID overwrites lower 16-bit data in the common shift register data at the rising edge of LAT after the data in the common shift register are copied to the output on-off data latch. If the common shift register MSB is '1', the selected SID does not overwrite the 16-bit data in the common shift register

Copyright © 2015–2016, Texas Instruments Incorporated

Device Functional Modes (continued)

After being copied into the common shift register, new SID data are not available until new data are written into the common shift register. If new data are not written, the LAT signal is ignored. To recheck SID without changing the on-off control data, reprogram the common shift register with the same data currently programmed into the on-off data latch. When LAT goes high, the output on-off data is not changed, but new SID data are loaded into the common shift register. LOD, LSD, OLD, PTW, TEF, ISF are shifted out of SOUT with each rising edge of SCLK. The SID need to be read out after t_{d4} or more from the device operation resumed from the power save mode.

The SID reading must be delayed for a duration of t_{D4} or more after the device resumes operation from the power-save mode because SID does not indicate correct data during the power-save mode. The SID load configuration and SID read timing are shown in Figure 10 and Figure 30, respectively.

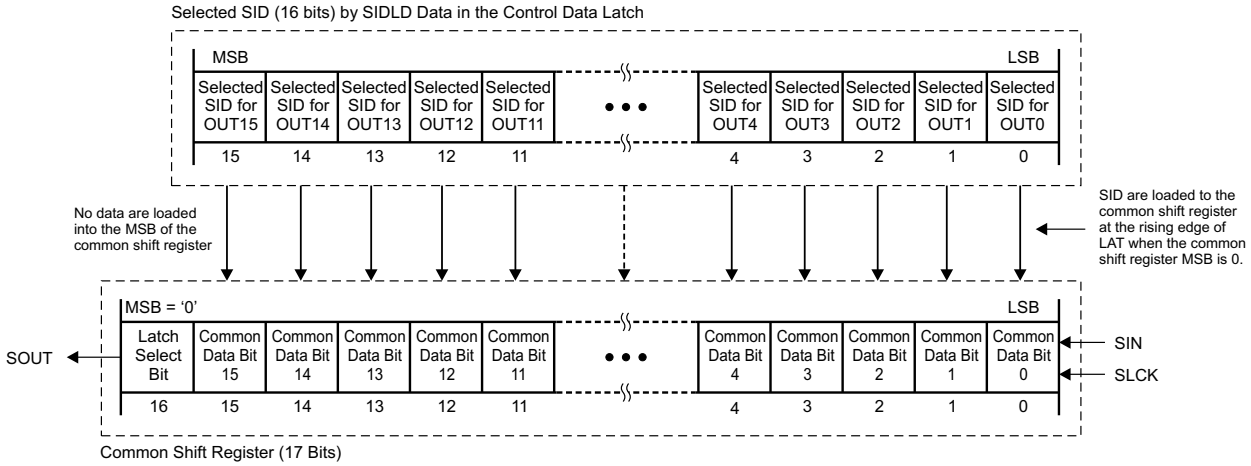

Figure 30. SID Load Configuration

Table 4. SID Load Assignment

SIDLD 1/0 BIT	SELECTED DETECTOR	CHECKED OUT*n*	BIT NUMBER LOADED INTO COMMON SHIFT REGISTER	DESCRIPTION
00b	No detector selected	—	No data loaded	The data in the common shift register are not changed.
01b	LED open detection (LOD)	OUT0	0	The data in the common shift register are updated with LOD or TEF data. All bits '1' = device junction temperature (T_J) is high ($T_J > T_{TEF}$) and all outputs are forced off by the thermal shutdown function.'1 = OUT*n* shows lower voltage than the LED open detection threshold (V_{LOD}). 0 = normal operation.
		OUT1	1	
		. . .	. . .	
		OUT14	14	
		OUT15	15	
10b	LED short detection (LSD)	OUT0	0	The data in the common shift register are updated with LSD or PTW data. All bits '1' = device junction temperature (T_J) is high ($T_J > T_{PTW}$). 1 = OUT*n* shows higher voltage than the LED short detection threshold (V_{LSD}) selected by LSDVLT. 0 = normal operation.
		OUT1	1	
		. . .	. . .	
		OUT14	14	
		OUT15	15	
11b	Output leakage detection (OLD)	OUT0	0	The data in the common shift register are updated with OLD or ISF data. All bits '1' = IREF pin is shorted to GND with low impedance. 1 = OUT*n* is leaking to GND with greater than 3µA. 0 = normal operation.
		OUT1	1	
		. . .	. . .	
		OUT14	14	
		OUT15	15	

Copyright © 2015–2016, Texas Instruments Incorporated

Table 5. LOD/LSD/OLD Truth Table

LOD	LSD	OLD	CORRESPONDING BIT IN SID
LED is not opened ($V_{OUTn} > V_{LOD}$)	LED is not shorted ($V_{OUTn} \le V_{LSD}$)	OUT*n* does not leak to GND ($V_{OUTn} > V_{LSD}$ when constant-current output off and OUT*n* source current on)	0
LED is open or shorted to GND ($V_{OUTn} \le V_{LOD}$)	LED is shorted between anode and cathode, or shorted to higher voltage side ($V_{OUTn} > V_{LSD}$)	Current leaks from OUT*n* to internal GND, or OUT*n* is shorted to external GND with high impedance ($V_{OUTn} \le V_{LSD}$ when constant-current output off and OUT*n* source current on)	1

8.5 Register Maps

8.5.1 Register and Data Latch Configuration

The TLC59291 has one common shift register and two control data latch. The common shift register is 16-bits in length and two control data latch is 16-bits length. When SCLK is '0' at LAT rising edge, the 16-bits common shift register are copied into the output on-off data latch. Also when SCLK is '1' at LAT rising edge the 16-bits data are copied into the control data latch. Figure 31 shows the common shift register and two control data latches configuration.

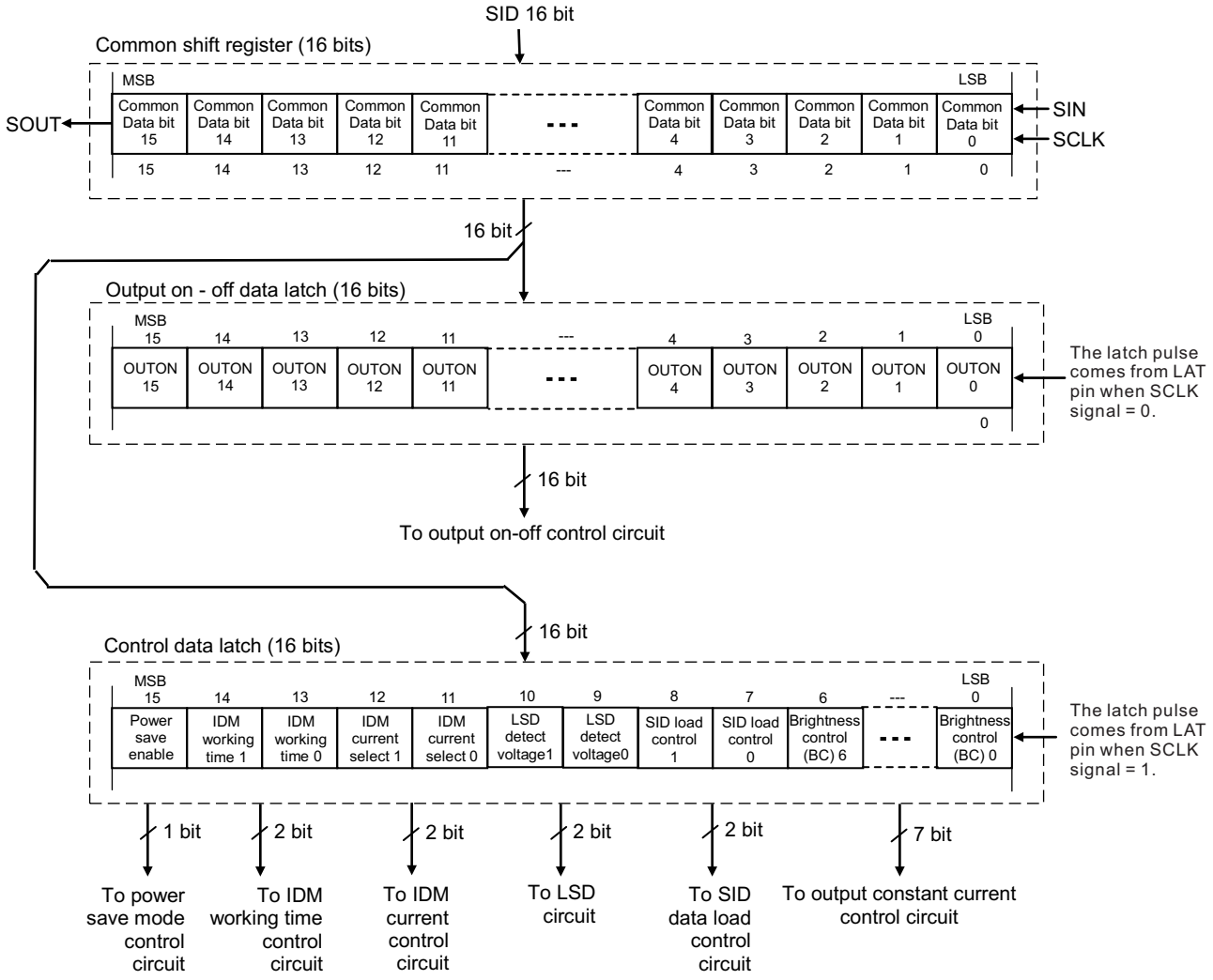

Figure 31. Common Shift Register and Control Data Latches Configuration

Register Maps (continued)

8.5.1.1 Common Shift Register

The 16-bit common shift register is used to shift data from the SIN pin into the TLC59291. The data shifted into the register are used for the data writing for output on-off control, global brightness control, and some functions control. The register LSB is connected to SIN. On each SCLK rising edge, the data on SIN are shifted into the register LSB and all bits are shifted towards the MSB.

SOUT can be connected to either bit 15 or bit 7 of common shift register depending on BLANK signal and control data setting.

Also Status Information Data (SID) selected by the load select data in the control data latch are loaded to the common shift register when LAT rising edge is input with SCLK is “0” of the shift register.

When the device powered up, the data in the 16-bit common shift register is set to all “0”.

8.5.1.2 Output On/Off Data Latch

The output on/off data latch is 16 bits long and sets the on or off status for each constant-current output.

When FC[9] = 1 and BLANK is high, all outputs are forced off. But then the data in the latch are not changed. In other case, the corresponding output is turned on if the data in the output on-off data latch are '1' and remains off if the data are '0'.

When the IC is initially powered on, the data in the data latch is set to all “0”.

The output on/off data latch configuration is shown in Figure 32 and the data bit assignment is shown in Table 6.

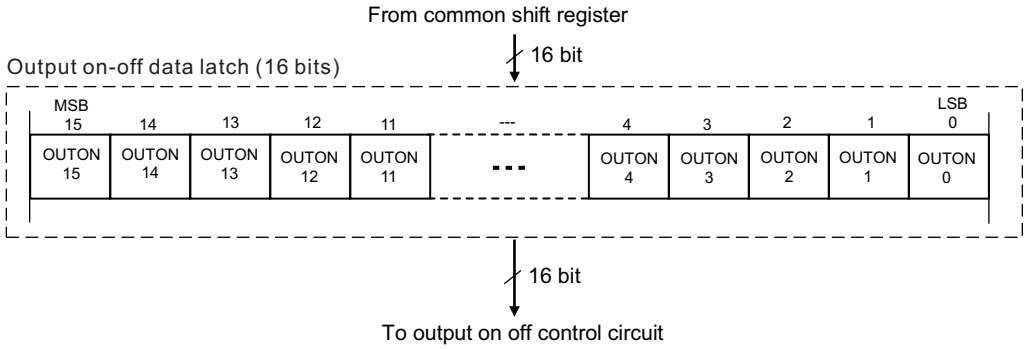

Figure 32. Output On/Off Data Latch Configuration

Table 6. On/Off Control Data Latch Bit Assignment

BIT NUMBER	BIT NAME	CONTROLLED CHANNEL
0	OUTON0	OUT0
1	OUTON1	OUT1
2	OUTON2	OUT2
. . .	. . .	. . .
13	OUTON13	OUT13
14	OUTON14	OUT14
15	OUTON15	OUT15

Copyright © 2015–2016, Texas Instruments Incorporated

Figure 33. Output On/Off Data Latch

15	14	13	12	11	10	9	8
0	0	0	0	0	0	0	0
R/W	R/W	R/W	R/W	R/W	R/W	R/W	R/W
7	6	5	4	3	2	1	0
0	0	0	0	0	0	0	0
R/W	R/W	R/W	R/W	R/W	R/W	R/W	R/W

LEGEND: R/W = Read/Write; R = Read only; -n = value after reset

Table 7. Output On/Off Data Latch

Bit	Field	Type	Reset	Description
[15]	OUTON15	R/W	00	When IC is powered up, these all data are set to “0” 0 = output OFF (default) 1 = output ON
[14]	OUTON14	R/W	00	
[13]	OUTON13	R/W	00	
[12]	OUTON12	R/W	00	
[11]	OUTON11	R/W	00	
[10]	OUTON10	R/W	00	
[9]	OUTON9	R/W	00	
[8]	OUTON8	R/W	00	
[7]	OUTON7	R/W	00	
[6]	OUTON6	R/W	00	
[5]	OUTON5	R/W	00	
[4]	OUTON4	R/W	00	
[3]	OUTON3	R/W	00	
[2]	OUTON2	R/W	00	
[1]	OUTON1	R/W	00	
[0]	OUTON0	R/W	00	

8.5.1.3 Control Data Latch

The control data latch is 16-bit in length and contains the *Global Brightness Control (BC) Function* data, *Status Information Data (SID)* load select data, *Blank Mode Selection (BLKMS)* data, the current value for *Invisible Detection Mode (IDM)*, IDM working time, and *Power-Save Mode* enable control data.

When the device is powered up, the data in this data latch are set to the default values shown in Table 8.

The function control data latch configuration is shown in Figure 34.

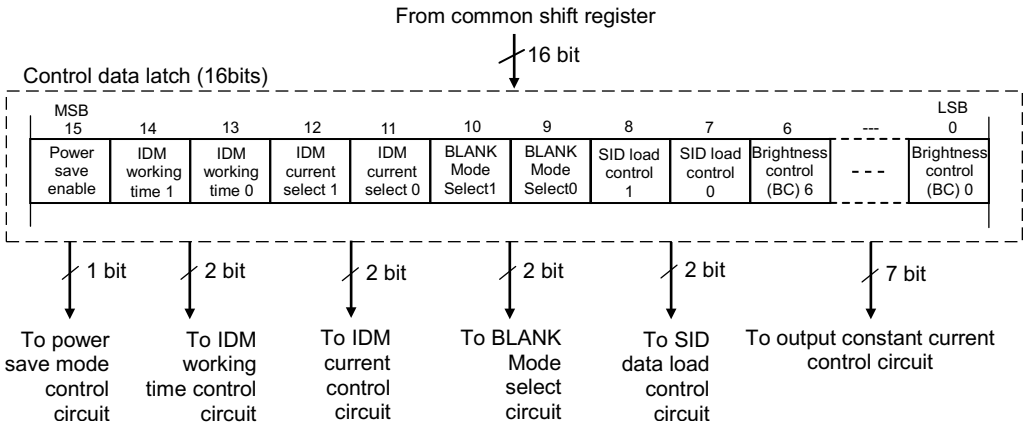

Figure 34. Function Control Data Latch Configuration

Figure 35. Control Data Latch

15	14	13	12	11	10	9	8
1	0	0	0	0	1	0	0
R/W	R/W	R/W	R/W	R/W	R/W	R/W	R/W
7	6	5	4	3	2	1	0
0	1	1	1	1	1	1	1
R/W	R/W	R/W	R/W	R/W	R/W	R/W	R/W

LEGEND: R/W = Read/Write; R = Read only; -n = value after reset

Table 8. Control Data Latch

Bit	Field	Type	Reset	Description
[15]	PSMODE	R/W	1b	Power save mode enable (Default value = '1b') The data selects power save mode enable or disable. When the mode is enabled, the device goes into power save mode if all data in the on/off data latch are "0". Table 15 shows the power save mode truth table. Figure 7 shows the power save mode operation timing.
[14:13]	IDMTIM	R/W	00b	IDM working time select (Default value = '00b') The data selects the time of output current sink at OUTn for IDM to detect LED open detection (LOD) or LSD without visible lighting. Table 15 shows the work time truth table.Figure 9 shows the IDM operation timing.
[12:11]	IDMCUR	R/W	00b	IDM current select (Default value = '00b') The data selects the sink current at OUTn for IDM to detect LED open detection (LOD) or LSD without visible lighting. Table 14 shows the current value truth table. Figure 9 shows the IDM operation timing.
[10]	LSDVLT	R/W	1b	LSD detection voltage select. (Default value = '1b') These two bits select the detection threshold voltage for the LED short detection (LSD). Table 12 shows the detect voltage truth table.
[9]	BLKMS	R/W	0b	BLANK Mode Select (Default value = '0b') The data selects the working mode for BLANK pin. Table 11 shows the truth table.
[8:7]	SIDLD	R/W	00b	SID load control (Default value = '00b') The data selects the SID data loaded to the common register when LAT pulse is input for on-off data writing. Table 10 shows the selected data truth table.
[6:0]	BCALL	R/W	1111111b	Global brightness control (Default value = '1111111b') The 7-bit data controls the current of all output with 128 steps between 0~100% of the maximum current value set by a external resistor. Table 13 shows the current value truth table.

8.5.1.4 Output On/Off Data Write Timing and Output Control

When SCLK = "0" at LAT rising edge, the output on-off data can be updated with the 16-bit data in the shift register after the data are stored to the shift register using SIN and SCLK signals. When the on-off data latch is updated, SID is loaded into the shift register except SID load control is "00b". See Figure 11.

When BLANK = SOUT mode, the timing is show in Figure 12.

8.5.1.5 Function Control Data Writing

When SCLK = "1" at LAT rising edge, the control data latch can be updated with the 16-bit data in the shift register after the data are stored to the shift register using SIN and SCLK signals. When the control data latch is updated, SID is not loaded into the shift register.

If the device is in SOUT mode (FC[9] = 0) and BLANK = Low, SOUT is connected with BIT 7 of common shift register. Then FC data can't be input and not valid. See Figure 13

Copyright © 2015–2016, Texas Instruments Incorporated

8.5.1.6 Function Control (FC) Data

The FC data latch is 16 bits long and is used to adjust output current values for LED brightness, select the SID, BLANK mode select, the output current for IDM, the output on time for IDM, and power-save mode enable/disable. When the IC is powered on, the control data latch is set to the default value (E67Fh).The control data latch truth tables are shown in Table 9 through Table 14.

Table 9. Global Brightness Control (BC) Truth Table

BCALL (BIT 6:0)	Brightness Control for all Output with Output Current
0000000	Output current of OUT*n* is set to $I_{O(LCmax)}$ × 0%
0000001	$I_{O(LCmax)}$ × 0.8%
. . .	. . .
1111110	$I_{O(LCmax)}$ × 99.2%
1111111	$I_{O(LCmax)}$ × 100%

Table 10. SID Load Control Truth Table

SIDLD		SID LOADED TO THE COMMON SHIFT REGISTER
BIT 8	BIT 7	
0	0	No data is loaded (default value)
0	1	LED open detection (LOD) or thermal error flag (TEF) data are loaded
1	0	LED short detection (LSD) or pre-thermal warning (PTW) data are loaded
1	1	Output leakage detection (OLD) or IREF pin short flag (ISF) data are loaded

Table 11. BLANK Mode Selection Table

BLKMS (BIT 9)	BLANK MODE SELECTION
0	SOUT mode, BLANK pin worked as SOUT 8/16 select signal (default)
1	Enable mode, BLANK pin worked as OUTPUT enable

Table 12. LSD Threshold Voltage Truth Table

LSDVLT (BIT 10)	LED SHORT DETECTION (LSD) THRESHOLD VOLTAGE
0	V_{LSD0} (0.35 × V_{CC} typ)
1	V_{LSD3} (0.65 × V_{CC} typ, default value)

Table 13. Current Select for IDM

IDMCUR		SINK CURRENT AT OUT*n* FOR INVISIBLE DETECTION MODE (IDM)
BIT 12	BIT 11	
0	0	IDM is disabled (default value)
0	1	2 µA (typ)
1	0	10 µA (typ)
1	1	20 µA (typ)

Table 14. IDM Work-Time Truth Table

IDMTIM		INVISIBLE DETECTION MODE (IDM) WORKING TIME
BIT 14	BIT 13	
0	0	All outputs are turned on for 17 OSC clocks (0.85 µs typ)
0	1	All outputs are turned on for 33 OSC clocks (1.65 µs typ)
1	0	All outputs are turned on for 65 OSC clocks (3.25 µs typ)
1	1	All outputs are turned on for 129 OSC clocks (6.45 µs tyicalp, default value)

Copyright © 2015–2016, Texas Instruments Incorporated

Table 15. Power-Save Mode Truth Table

PSMODE (BIT 15)	POWER-SAVE MODE FUNCTION
0	Power-save mode is disabled. The device does not go into power-save mode even if the bits in the output on/off data latch are all '0'.
1	Power save mode is enabled (default value). The device goes into power-save mode when the bits in the output on/off data latch are all '0'.

Copyright © 2015–2016, Texas Instruments Incorporated

9 Application and Implementation

NOTE

Information in the following applications sections is not part of the TI component specification, and TI does not warrant its accuracy or completeness. TI's customers are responsible for determining suitability of components for their purposes. Customers should validate and test their design implementation to confirm system functionality.

9.1 Application Information

The device is a 8/16-channel, constant sink current, LED driver. This device is typically connected in series to drive many LED lamps with only a few controller ports. On/Off control data and FC control data can be written from the SIN input terminal. The device has six type error flags: LED open detection (LOD), LED short detection (LSD), output leak detection (OLD), reference terminal short detection (ISF), Pre themal warning (PTW) and thermal error flag (TEF).

9.2 Typical Application

In this application, the device VCC and LED lamp anode voltages are supplied from different power supplies.

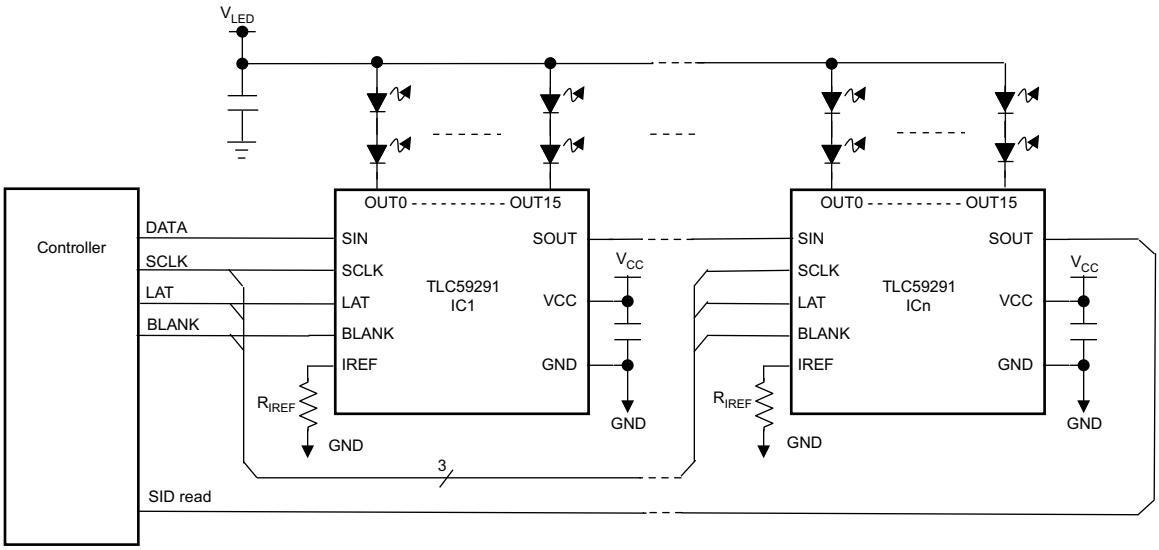

Figure 36. Multiple Daisy-chained TLC59291 Devices

9.2.1 Design Requirements

The parameters for the design example are shown in Table 16.

Table 16. Design Parameters

PARAMETER	VALUE
VCC input voltage range	3 V to 5.5 V
LED lamp (V_{LED}) input voltage range	Maximum LED forward voltage (V_F) + 0.3 V (knee voltage)
SIN, SCLK, LAT, and GSCLK voltage range	Low level = GND, High level = V_{CC}

9.2.2 Detailed Design Procedure

To begin the design process, a few parameters must be decided upon. The designer needs to know the following:

- Maximum output constant-current value for each color LED lamp.
- Maximum LED forward voltage (V_F).
- Which error flags are used.

Copyright © 2015–2016, Texas Instruments Incorporated

9.2.3 Application Curves

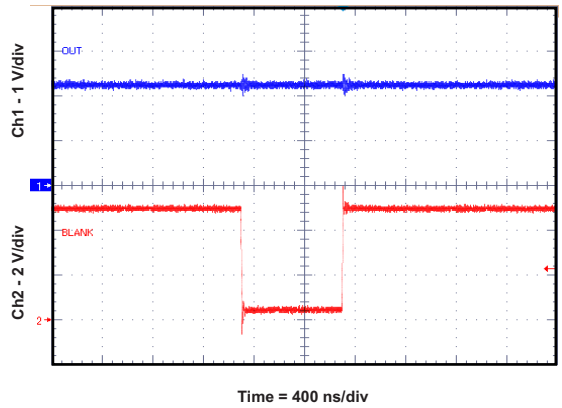

Figure 37. Output Waveform When BLANK_Mode = 0

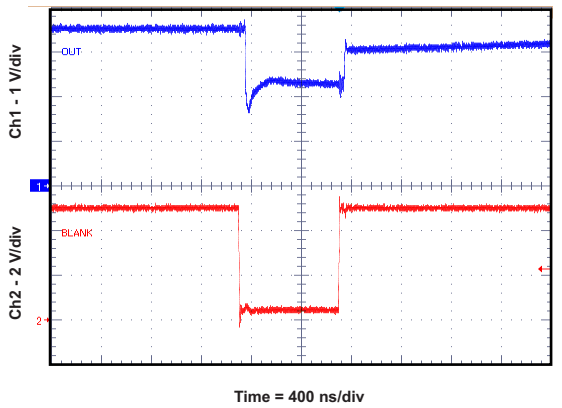

Figure 38. Output Waveform When BLANK_Mode = 1

10 Power Supply Recommendations

The VCC power supply voltage should be decoupled by placing a 0.1-µF ceramic capacitor close to the VCC pin and GND plane. Depending on the panel size, several electrolytic capacitors must be placed on the board equally distributed to get a well regulated LED supply voltage (V_{LED}). The V_{LED} voltage ripple must be less than 5% of it nominal value. Futhremore, the V_{LED} must be set to the voltage calculated by Equation 3.

$$V_{LED} > V_F + 0.4\ V \text{ (10-mA constant-current example)} \quad (3)$$

Where

- V_F = maximum forward voltage of all LEDs.

Copyright © 2015–2016, Texas Instruments Incorporated

11 Layout

11.1 Layout Guidelines

- Place the decoupling capacitor near the VCC pin and GND plane
- Place the current programming resistor R_{IREF} close to the IREF pin an the IREFGND pin.
- Route the GND pattern as widely as possible for large GND currents.
- The routing wire between the LED cathode side and the device OUTXn pin must be as short and straight as possible to reduce wire inductance.
- When several ICs are chained, symmetric placements are recommended.

11.2 Layout Example

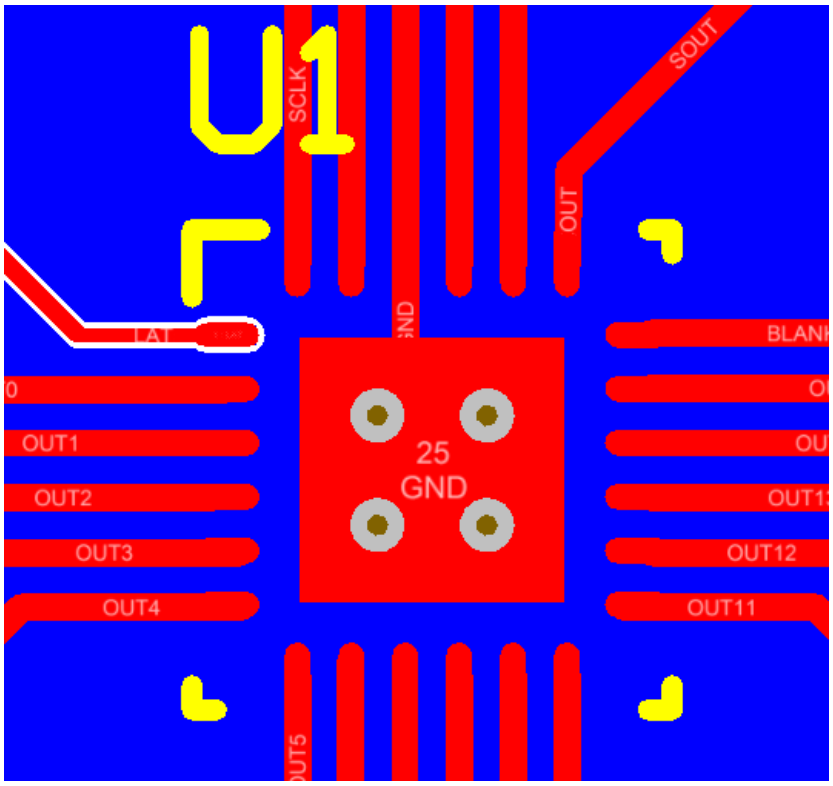

Figure 39. Layout

12 Device and Documentation Support

12.1 Documentation Support

12.2 Community Resources

The following links connect to TI community resources. Linked contents are provided "AS IS" by the respective contributors. They do not constitute TI specifications and do not necessarily reflect TI's views; see TI's Terms of Use.

TI E2E™ Online Community ***TI's Engineer-to-Engineer (E2E) Community.*** Created to foster collaboration among engineers. At e2e.ti.com, you can ask questions, share knowledge, explore ideas and help solve problems with fellow engineers.

Design Support ***TI's Design Support*** Quickly find helpful E2E forums along with design support tools and contact information for technical support.

12.3 Trademarks

E2E is a trademark of Texas Instruments.

12.4 Electrostatic Discharge Caution



These devices have limited built-in ESD protection. The leads should be shorted together or the device placed in conductive foam during storage or handling to prevent electrostatic damage to the MOS gates.

12.5 Glossary

SLYZ022 — *TI Glossary*.

This glossary lists and explains terms, acronyms, and definitions.

13 Mechanical, Packaging, and Orderable Information

The following pages include mechanical, packaging, and orderable information. This information is the most current data available for the designated devices. This data is subject to change without notice and revision of this document. For browser-based versions of this data sheet, refer to the left-hand navigation.

Copyright © 2015–2016, Texas Instruments Incorporated

PACKAGING INFORMATION

Orderable Device	Status (1)	Package Type	Package Drawing	Pins	Package Qty	Eco Plan (2)	Lead/Ball Finish (6)	MSL Peak Temp (3)	Op Temp (°C)	Device Marking (4/5)	Samples
TLC59291RGER	ACTIVE	VQFN	RGE	24	3000	Green (RoHS & no Sb/Br)	NIPDAU	Level-2-260C-1 YEAR	-40 to 85	TLC 59291	Samples
TLC59291RGET	ACTIVE	VQFN	RGE	24	250	Green (RoHS & no Sb/Br)	NIPDAU	Level-2-260C-1 YEAR	-40 to 85	TLC 59291	Samples

(1) The marketing status values are defined as follows:
ACTIVE: Product device recommended for new designs.
LIFEBUY: TI has announced that the device will be discontinued, and a lifetime-buy period is in effect.
NRND: Not recommended for new designs. Device is in production to support existing customers, but TI does not recommend using this part in a new design.
PREVIEW: Device has been announced but is not in production. Samples may or may not be available.
OBSOLETE: TI has discontinued the production of the device.

(2) **RoHS:** TI defines "RoHS" to mean semiconductor products that are compliant with the current EU RoHS requirements for all 10 RoHS substances, including the requirement that RoHS substance do not exceed 0.1% by weight in homogeneous materials. Where designed to be soldered at high temperatures, "RoHS" products are suitable for use in specified lead-free processes. TI may reference these types of products as "Pb-Free".
RoHS Exempt: TI defines "RoHS Exempt" to mean products that contain lead but are compliant with EU RoHS pursuant to a specific EU RoHS exemption.
Green: TI defines "Green" to mean the content of Chlorine (Cl) and Bromine (Br) based flame retardants meet JS709B low halogen requirements of <=1000ppm threshold. Antimony trioxide based flame retardants must also meet the <=1000ppm threshold requirement.

(3) MSL, Peak Temp. - The Moisture Sensitivity Level rating according to the JEDEC industry standard classifications, and peak solder temperature.

(4) There may be additional marking, which relates to the logo, the lot trace code information, or the environmental category on the device.

(5) Multiple Device Markings will be inside parentheses. Only one Device Marking contained in parentheses and separated by a "~" will appear on a device. If a line is indented then it is a continuation of the previous line and the two combined represent the entire Device Marking for that device.

(6) Lead/Ball Finish - Orderable Devices may have multiple material finish options. Finish options are separated by a vertical ruled line. Lead/Ball Finish values may wrap to two lines if the finish value exceeds the maximum column width.

Important Information and Disclaimer: The information provided on this page represents TI's knowledge and belief as of the date that it is provided. TI bases its knowledge and belief on information provided by third parties, and makes no representation or warranty as to the accuracy of such information. Efforts are underway to better integrate information from third parties. TI has taken and continues to take reasonable steps to provide representative and accurate information but may not have conducted destructive testing or chemical analysis on incoming materials and chemicals. TI and TI suppliers consider certain information to be proprietary, and thus CAS numbers and other limited information may not be available for release.

In no event shall TI's liability arising out of such information exceed the total purchase price of the TI part(s) at issue in this document sold by TI to Customer on an annual basis.

GENERIC PACKAGE VIEW

RGE 24 VQFN - 1 mm max height

PLASTIC QUAD FLATPACK - NO LEAD

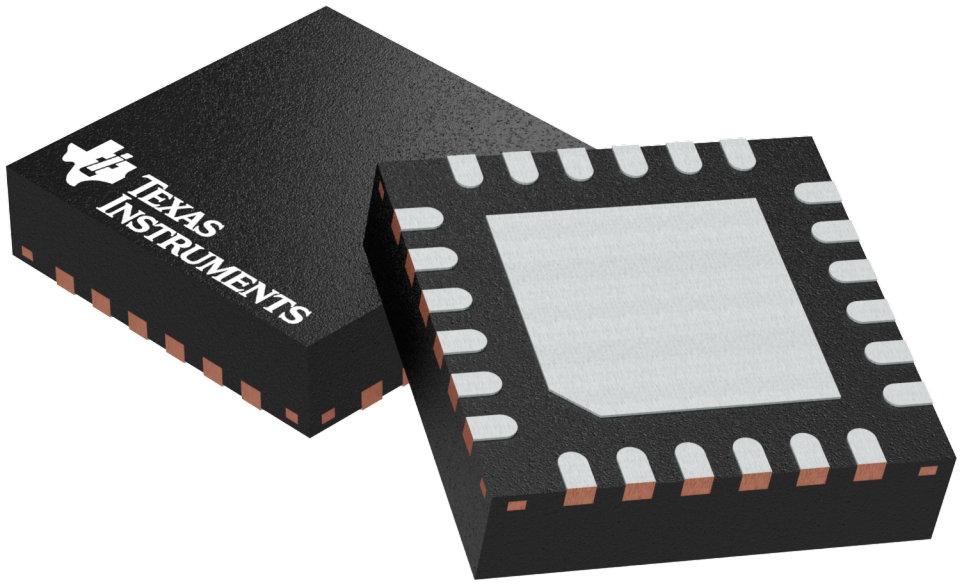

Images above are just a representation of the package family, actual package may vary.
Refer to the product data sheet for package details.

4204104/H

PACKAGE OUTLINE

RGE0024B

VQFN - 1 mm max height

PLASTIC QUAD FLATPACK - NO LEAD

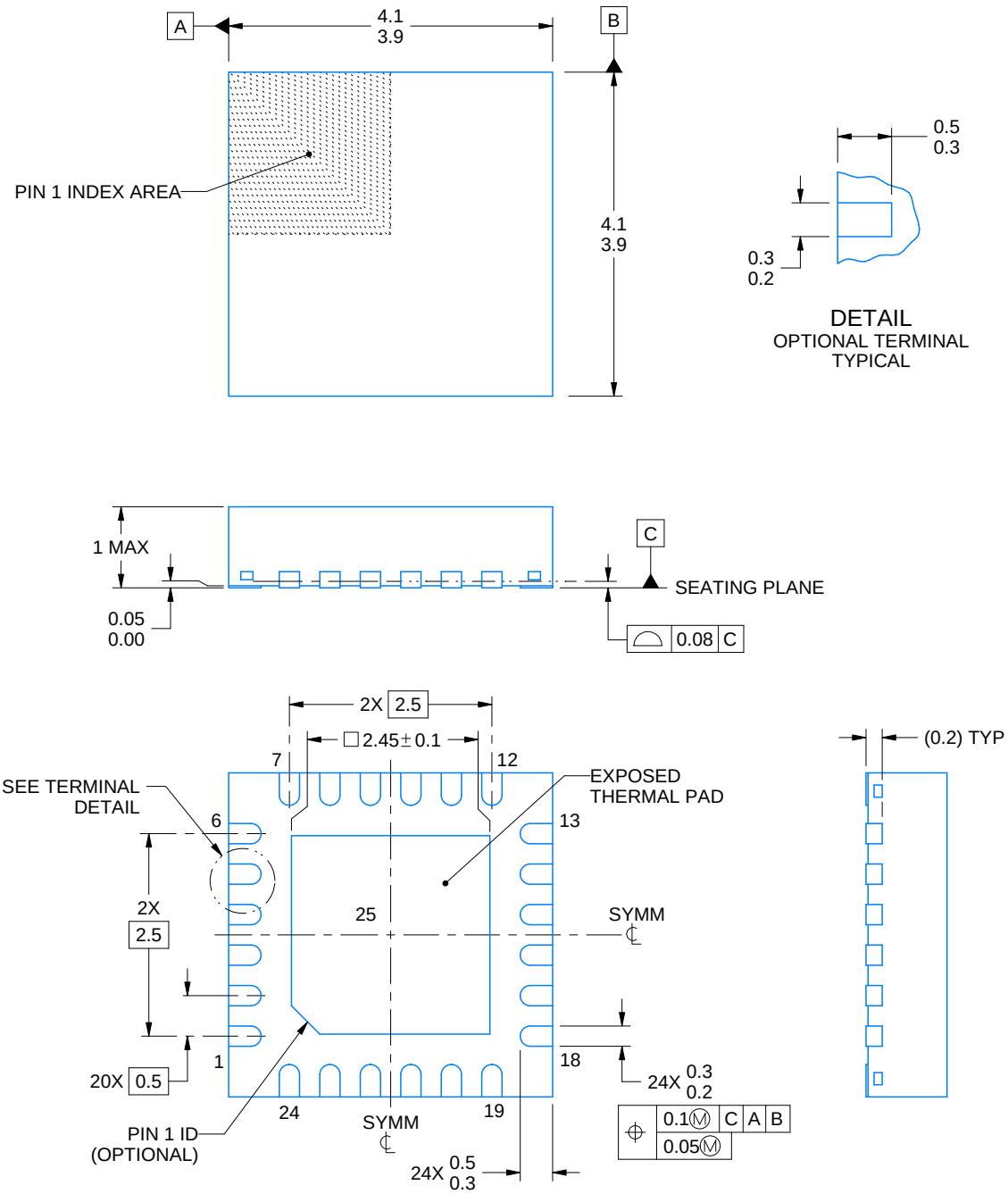

NOTES:

1. All linear dimensions are in millimeters. Any dimensions in parenthesis are for reference only. Dimensioning and tolerancing per ASME Y14.5M.
2. This drawing is subject to change without notice.
3. The package thermal pad must be soldered to the printed circuit board for thermal and mechanical performance.

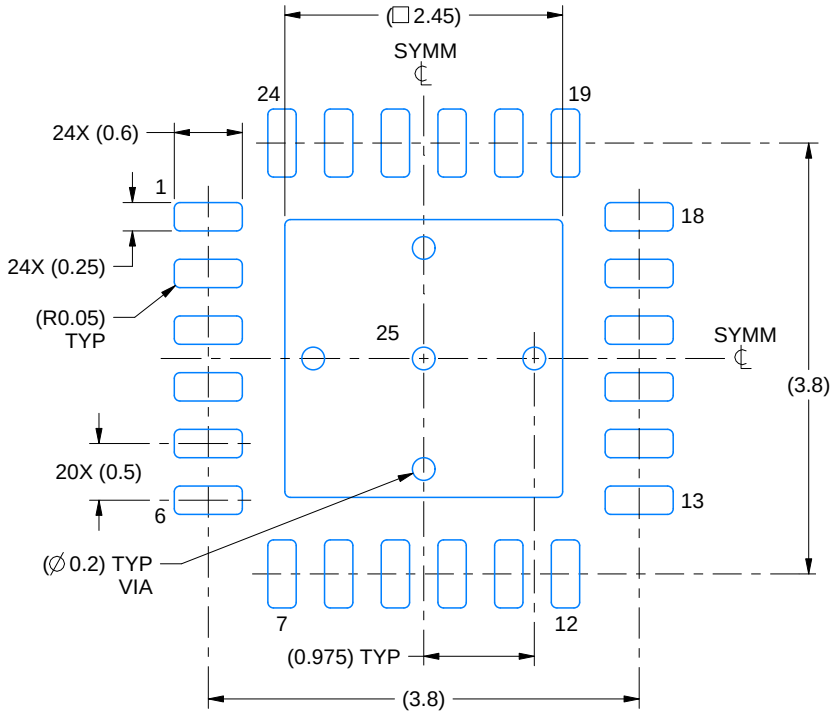

LAND PATTERN EXAMPLE
EXPOSED METAL SHOWN
SCALE:15X

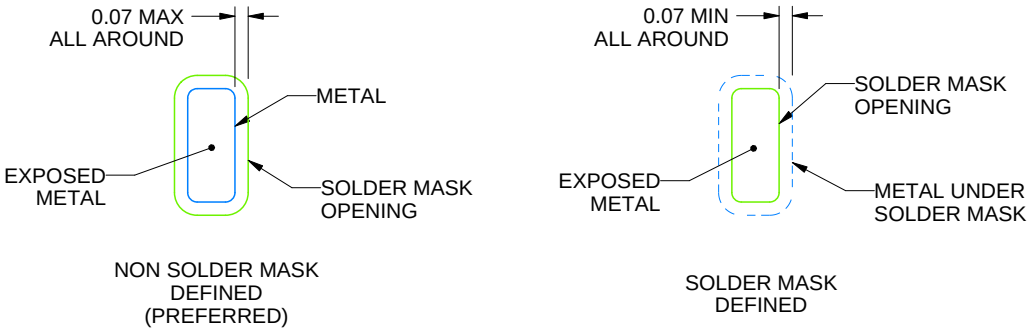

SOLDER MASK DETAILS

4219013/A 05/2017

NOTES: (continued)

4. This package is designed to be soldered to a thermal pad on the board. For more information, see Texas Instruments literature number SLUA271 (www.ti.com/lit/slua271).
5. Vias are optional depending on application, refer to device data sheet. If any vias are implemented, refer to their locations shown on this view. It is recommended that vias under paste be filled, plugged or tented.

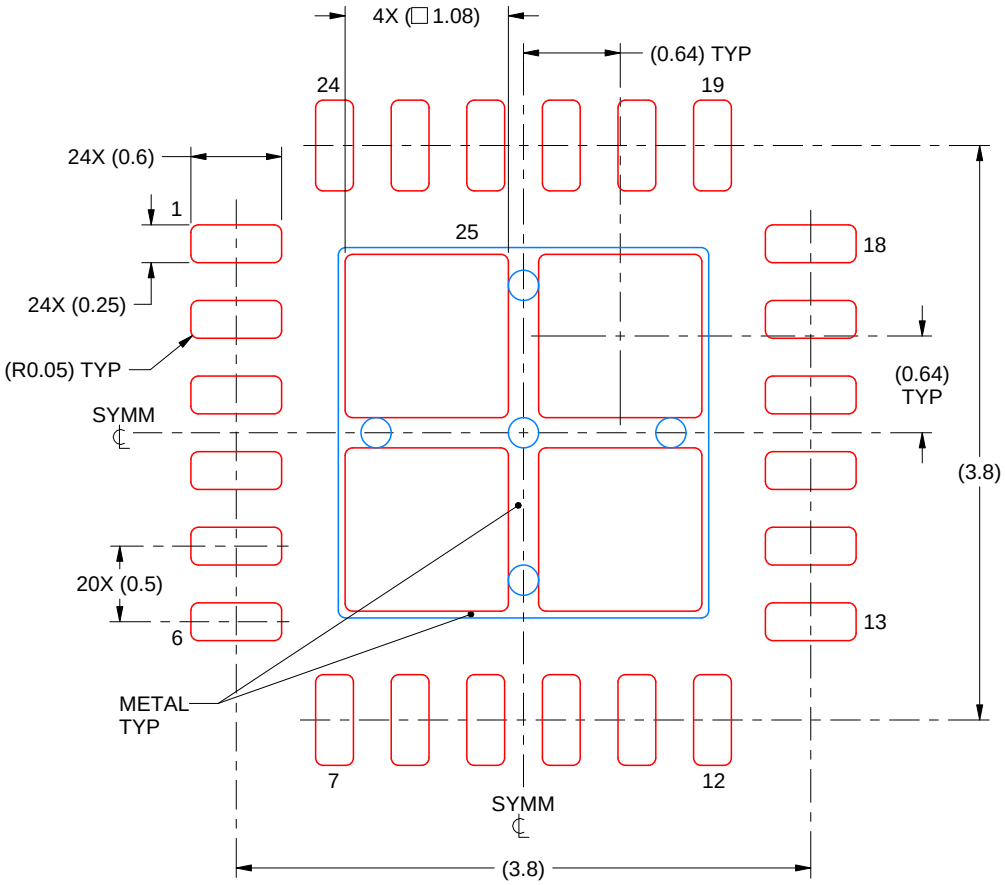

SOLDER PASTE EXAMPLE
BASED ON 0.125 mm THICK STENCIL

EXPOSED PAD 25
78% PRINTED SOLDER COVERAGE BY AREA UNDER PACKAGE
SCALE:20X

4219013/A 05/2017

NOTES: (continued)

6. Laser cutting apertures with trapezoidal walls and rounded corners may offer better paste release. IPC-7525 may have alternate design recommendations.

IMPORTANT NOTICE AND DISCLAIMER

TI PROVIDES TECHNICAL AND RELIABILITY DATA (INCLUDING DATASHEETS), DESIGN RESOURCES (INCLUDING REFERENCE DESIGNS), APPLICATION OR OTHER DESIGN ADVICE, WEB TOOLS, SAFETY INFORMATION, AND OTHER RESOURCES “AS IS” AND WITH ALL FAULTS, AND DISCLAIMS ALL WARRANTIES, EXPRESS AND IMPLIED, INCLUDING WITHOUT LIMITATION ANY IMPLIED WARRANTIES OF MERCHANTABILITY, FITNESS FOR A PARTICULAR PURPOSE OR NON-INFRINGEMENT OF THIRD PARTY INTELLECTUAL PROPERTY RIGHTS.

These resources are intended for skilled developers designing with TI products. You are solely responsible for (1) selecting the appropriate TI products for your application, (2) designing, validating and testing your application, and (3) ensuring your application meets applicable standards, and any other safety, security, or other requirements. These resources are subject to change without notice. TI grants you permission to use these resources only for development of an application that uses the TI products described in the resource. Other reproduction and display of these resources is prohibited. No license is granted to any other TI intellectual property right or to any third party intellectual property right. TI disclaims responsibility for, and you will fully indemnify TI and its representatives against, any claims, damages, costs, losses, and liabilities arising out of your use of these resources.

TI’s products are provided subject to TI’s Terms of Sale (www.ti.com/legal/termsofsale.html) or other applicable terms available either on ti.com or provided in conjunction with such TI products. TI’s provision of these resources does not expand or otherwise alter TI’s applicable warranties or warranty disclaimers for TI products.

Mailing Address: Texas Instruments, Post Office Box 655303, Dallas, Texas 75265
Copyright © 2020, Texas Instruments Incorporated