TL50A Audible Indicators

more sensors, more solutions

Datasheet

General-Purpose Audible Indicators

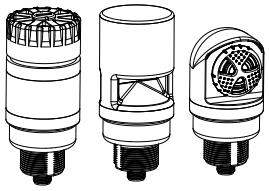

- Rugged, cost-effective and easy to install
- Compact devices are self-contained, no controller needed
- Immune to EMI and RFI interference
- Choose IEC IP50 or Sealed IEC IP67 model, black or light gray housing
- 12 V dc to 30 V dc, or 24 V ac operation

Models

Standard Audible Models [1]			Connection[2]	Inputs
TL50AQ			Integral 4-pin M12/Euro-style quick disconnect	Bimodal (NPN or PNP)

Sealed Audible Models [1]			Connection [2]	Inputs
Continuous	Pulsed at 1.6 Hz	Staccato		
TL50ALSQ	TL50ALS3Q	TL50ALS4Q	Integral 4-pin M12/Euro-style quick disconnect	Bimodal (NPN or PNP)

Omni-Directional Sealed Audible Models [1]			Connection [2]	Inputs
Continuous	Pulsed at 1.6 Hz	Staccato		
TL50AOSQ	TL50AOS3Q	TL50AOS4Q	Integral 4-pin M12/Euro-style quick disconnect	Bimodal (NPN or PNP)

Omni-Directional Sealed Audible Models with Intensity Adjustment [1]			Connection [2]	Inputs
Continuous	Pulsed at 1.6 Hz	Staccato		
TL50AOSIQ	TL50AOS3IQ	TL50AOS4IQ	Integral 4-pin M12/Euro-style quick disconnect	Bimodal (NPN or PNP)

Wiring Diagrams

PNP Input

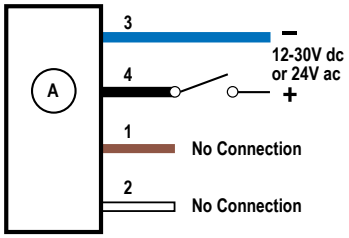

NPN Input

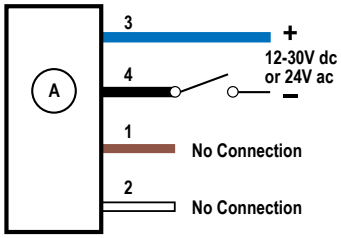

Key

1 = Brown
2 = White
3 = Blue
4 = Black

[1] Models with black housing are listed. For gray housing, add the suffix "C" at the end of the cabled model number or before the "Q" in quick disconnect model numbers. For example, TL50AC or TL50ACQ.

[2] Integral quick disconnect models are listed.

- To order the 150 mm (6 in) PVC cable model with a M12/Euro-style quick disconnect, replace the suffix "Q" with "QP" in the model number. For example, TL50AQP.
- To order the 2 m (6.5 ft) PVC cable model, omit the suffix "Q" in the model number. For example, TL50A.
- Models with a quick disconnect require a mating cordset.

Specifications

Supply Voltage and Current
12 V dc to 30 V dc; or 24 V ac (± 3 V ac) at 50 Hz to 60 Hz
Standard Audible Alarm: 25 mA maximum current
Sealed Audible Alarm: 35 mA maximum current
Omni-Directional Sealed Audible Alarm: 45 mA maximum current

Audible Alarm
Standard Audible Alarm: 2.7 kHz ± 500 Hz oscillation frequency; maximum intensity 92 dB at 1 m (3.3 ft) (typical)
Sealed Audible Alarm: 2.9 kHz ± 250 Hz oscillation frequency; maximum intensity 94 dB at 1m (3.3 ft) (typical)
Omni-Directional Sealed Audible Alarm: 2.1 kHz ± 250 Hz oscillation frequency; maximum intensity 99 dB at 1 m (3.3 ft) (typical)

Audible Adjustment
Standard Audible Alarm: Unscrew the cover (up to 1.5 turns maximum) to adjust the audible intensity (do not exceed 1.5 turns or the cover may detach during operation). For maximum intensity, rotate the center plug 180° counterclockwise to remove it.
Sealed Audible Alarm and Omni-Directional Sealed Audible Alarm with Intensity Adjustment: Rotate the front cover until the desired intensity is reached.
Typical Reduction in Sound Intensity with Audible Adjustment (maximum to minimum):
- **Standard Audible Alarm:** 30 dB
- **Sealed Audible Alarm:** 20 dB
- **Omni-Directional Sealed Audible Alarm:** 12 dB

Connections
Integral 4-pin M12/Euro-style quick disconnect, 150 mm (6 in) PVC cable with a M12/Euro-style quick disconnect, or 2 m (6.5 ft) integral PVC cable, depending on model
Models with a quick disconnect require a mating cordset

Vibration and Mechanical Shock
Meets IEC 60068-2-6 requirements (Vibration: 10 Hz to 55 Hz, 1.0 mm amplitude, 5 minutes sweep, 30 minutes dwell)
Meets IEC 60068-2-27 requirements (Shock: 30G 11 ms duration, half sine wave)

Operating Conditions
–20 °C to +50 °C (–4 °F to +122 °F)
95% at +50 °C maximum relative humidity (non-condensing)

Environmental Rating
UL Type 4X Indoor and UL Type 13
Standard models: IEC IP50
Sealed models: IEC IP67

Required Overcurrent Protection

WARNING: Electrical connections must be made by qualified personnel in accordance with local and national electrical codes and regulations.

Overcurrent protection is required to be provided by end product application per the supplied table.
Overcurrent protection may be provided with external fusing or via Current Limiting, Class 2 Power Supply.
Supply wiring leads < 24 AWG shall not be spliced.
For additional product support, go to *www.bannerengineering.com*.

Supply Wiring (AWG)	Required Overcurrent Protection (Amps)
20	5.0
22	3.0
24	2.0
26	1.0
28	0.8
30	0.5

Certifications

Dimensions

Standard Audible Models

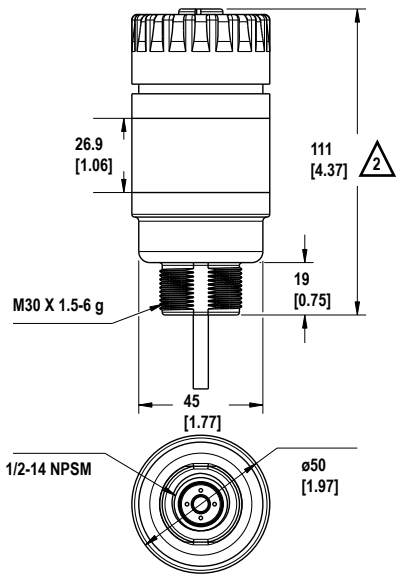

Sealed Audible Models

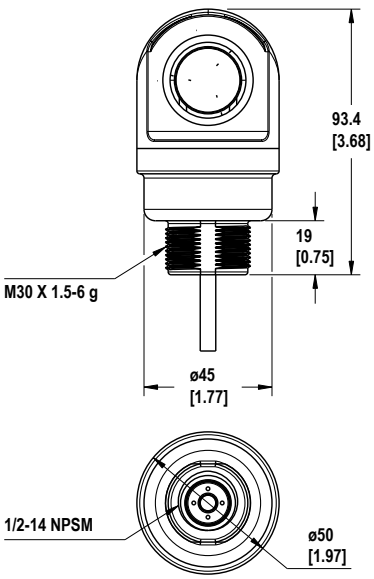

Omni-Directional Models

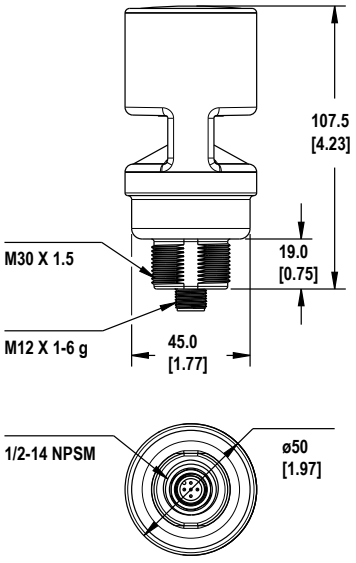

All measurements are listed in millimeters [inches], unless noted otherwise.

Accessories

Cordsets

4-Pin Threaded M12/Euro-Style Cordsets—Single Ended				
Model	**Length**	**Style**	**Dimensions**	**Pinout (Female)**
MQDC-406	1.83 m (6 ft)	Straight	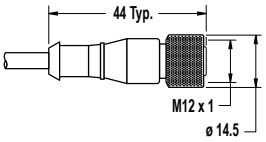	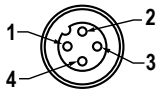 1 = Brown 2 = White 3 = Blue 4 = Black
MQDC-415	4.57 m (15 ft)			
MQDC-430	9.14 m (30 ft)			
MQDC-450	15.2 m (50 ft)			
MQDC-406RA	1.83 m (6 ft)	Right-Angle	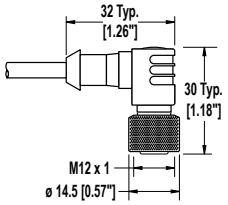	
MQDC-415RA	4.57 m (15 ft)			
MQDC-430RA	9.14 m (30 ft)			
MQDC-450RA	15.2 m (50 ft)			

Mounting Brackets

All measurements are listed in millimeters [inches], unless noted otherwise.

SMB30A

- Right-angle bracket with curved slot for versatile orientation
- Clearance for M6 (¼ in) hardware
- Mounting hole for 30 mm sensor
- 12-ga. stainless steel

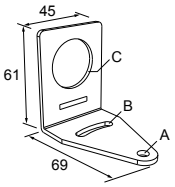

Hole center spacing: A to B=40
Hole size: A=ø 6.3, B= 27.1 x 6.3, C=ø 30.5

SMB30FA

- Swivel bracket with tilt and pan movement for precise adjustment
- Mounting hole for 30 mm sensor
- 12-ga. 304 stainless steel
- Easy sensor mounting to extrude rail T-slot
- Metric and inch size bolt available

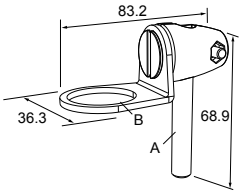

Bolt thread: SMB30FA, A= 3/8 - 16 x 2 in; SMB30FAM10, A= M10 - 1.5 x 50
Hole size: B= ø 30.1

SMB30MM

- 12-ga. stainless steel bracket with curved mounting slots for versatile orientation
- Clearance for M6 (¼ in) hardware
- Mounting hole for 30 mm sensor

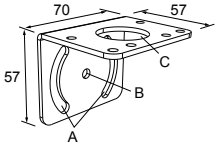

Hole center spacing: A = 51, A to B = 25.4
Hole size: A = 42.6 x 7, B = ø 6.4, C = ø 30.1

SMBAMS30P

- Flat SMBAMS series bracket
- 30 mm hole for mounting sensors
- Articulation slots for 90°+ rotation
- 12-ga. 300 series stainless steel

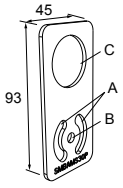

Hole center spacing: A=26.0, A to B=13.0
Hole size: A=26.8 x 7.0, B=ø 6.5, C=ø 31.0

SMBAMS30RA

- Right-angle SMBAMS series bracket
- 30 mm hole for mounting sensors
- Articulation slots for 90°+ rotation
- 12-ga. (2.6 mm) cold-rolled steel

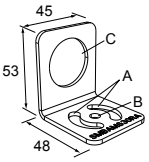

Hole center spacing: A=26.0, A to B=13.0
Hole size: A=26.8 x 7.0, B=ø 6.5, C=ø 31.0

SMB30SC

- Swivel bracket with 30 mm mounting hole for sensor
- Black reinforced thermoplastic polyester
- Stainless steel mounting and swivel locking hardware included

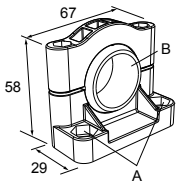

Hole center spacing: A=ø 50.8
Hole size: A=ø 7.0, B=ø 30.0

LMBE12RA35

- Direct mounting of stand-off pipe, with common bracket type
- Zinc-plated steel
- 1/2-14 NPSM nut
- Mounting distance from the wall to the center of the 1/2-14 NPSM nut is 35 mm

Hole center spacing: 20.0

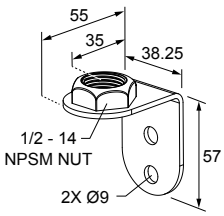

LMBE12RA45

- Direct mounting of stand-off pipe, with common bracket type
- Zinc-plated steel
- 1/2-14 NPSM nut
- Mounting distance from the wall to the center of the 1/2-14 NPSM nut is 45 mm

Hole center spacing: 35.0

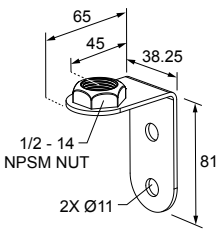

Pipe Mounting Flange

Pipe Mounting Flange			
Model	**Features**	**Construction**	
SA-F12	• Elevated-use stand-off pipes (½ in, NPSM/ DN15) • M5 mounting hardware and nitrile gasket included	Die-cast zinc base with black paint	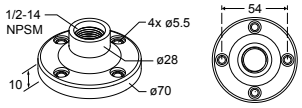
SA-F12-3	• Elevated-use stand-off pipes (½ in, NPSM/ DN15) • M4 mounting hardware and nitrile blend gasket included	Black Polycarbonate	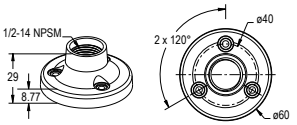

LMB Sealed Right-Angle Bracket

Model	Description	Construction	
LMB30RA	**Direct-Mount Models:** Bracket kit with base, 30 mm adapter, set screw, fasteners, O-rings, and gaskets.	Black polycarbonate	
LMB30RAC		Gray polycarbonate	
LMBE12RA	**Pipe-Mount Models:** Bracket kit with base, ½-14 pipe adapter, set screw, fasteners, O-rings, and gaskets. For use with stand-off pipe (listed and sold separately).	Black polycarbonate	
LMBE12RAC		Gray polycarbonate	

Elevated Mount System

Model			Features	Components
SA-M30TE12 - Black Acetal			• Streamlined black acetal or white UHMW stand-off pipe adapter/cover • Connects between 30 mm light base and ½ in. NPSM/DN15 pipe • Mounting hardware included	
SA-M30TE12C - White UHMW				
Polished 304 Stainless Steel	**Black Anodized Aluminum**	**Clear Anodized Aluminum**	• Elevated-use stand-off pipe (½ in. NPSM/DN15) • Polished 304 stainless steel, black anodized aluminum, or clear anodized aluminum surface • ½ in. NPT thread at both ends • Compatible with most industrial environments	
SOP-E12-150SS 150 mm (6 in) long	**SOP-E12-150A** 150 mm (6 in) long	**SOP-E12-150AC** 150 mm (6 in) long		
SOP-E12-300SS 300 mm (12 in) long	**SOP-E12-300A** 300 mm (12 in) long	**SOP-E12-300AC** 300 mm (12 in) long		
SOP-E12-900SS 900 mm (36 in) long	**SOP-E12-900A** 900 mm (36 in) long	**SOP-E12-900AC** 900 mm (36 in) long		
SA-E12M30 - Black Acetal			• Streamlined black acetal or white UHMW mounting base adapter/cover • Connects between ½ in. NPSM/DN15 pipe and 30 mm (1-3/16 in) drilled hole • Mounting hardware included	
SA-E12M30C - White UHMW				

Banner Engineering Corp. Limited Warranty

Banner Engineering Corp. warrants its products to be free from defects in material and workmanship for one year following the date of shipment. Banner Engineering Corp. will repair or replace, free of charge, any product of its manufacture which, at the time it is returned to the factory, is found to have been defective during the warranty period. This warranty does not cover damage or liability for misuse, abuse, or the improper application or installation of the Banner product.

THIS LIMITED WARRANTY IS EXCLUSIVE AND IN LIEU OF ALL OTHER WARRANTIES WHETHER EXPRESS OR IMPLIED (INCLUDING, WITHOUT LIMITATION, ANY WARRANTY OF MERCHANTABILITY OR FITNESS FOR A PARTICULAR PURPOSE), AND WHETHER ARISING UNDER COURSE OF PERFORMANCE, COURSE OF DEALING OR TRADE USAGE.

This Warranty is exclusive and limited to repair or, at the discretion of Banner Engineering Corp., replacement. **IN NO EVENT SHALL BANNER ENGINEERING CORP. BE LIABLE TO BUYER OR ANY OTHER PERSON OR ENTITY FOR ANY EXTRA COSTS, EXPENSES, LOSSES, LOSS OF PROFITS, OR ANY INCIDENTAL, CONSEQUENTIAL OR SPECIAL DAMAGES RESULTING FROM ANY PRODUCT DEFECT OR FROM THE USE OR INABILITY TO USE THE PRODUCT, WHETHER ARISING IN CONTRACT OR WARRANTY, STATUTE, TORT, STRICT LIABILITY, NEGLIGENCE, OR OTHERWISE.**

Banner Engineering Corp. reserves the right to change, modify or improve the design of the product without assuming any obligations or liabilities relating to any product previously manufactured by Banner Engineering Corp. Any misuse, abuse, or improper application or installation of this product or use of the product for personal protection applications when the product is identified as not intended for such purposes will void the product warranty. Any modifications to this product without prior express approval by Banner Engineering Corp will void the product warranties. All specifications published in this document are subject to change; Banner reserves the right to modify product specifications or update documentation at any time. Specifications and product information in English supersede that which is provided in any other language. For the most recent version of any documentation, refer to: *www.bannerengineering.com*.

For patent information, see *www.bannerengineering.com/patents*.

© Banner Engineering Corp. All rights reserved