TL5001

LINEAR INTEGRATED CIRCUIT

PULSE-WIDTH-MODULATION CONTROL CIRCUITS

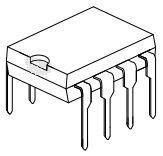

DIP-8

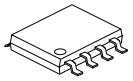

SOP-8

■ DESCRIPTION

The UTC **TL5001** incorporates on a single monolithic chip all the functions required for a pulse width modulation (PWM) control circuit. Designed primarily for power-supply control, It contains an error amplifier, a regulator, an oscillator, a PWM comparator with a dead-time-control input, undervoltage lockout (UVLO), short-circuit protection (SCP) and an open-collector output transistor.

The error-amplifier common-mode voltage ranges from 0V to 1.5V. The noninverting input of the error amplifier is connected to a 1-V reference. Dead-time control (DTC) can be set to provide 0% to 100% dead time by connecting an external resistor between DTC and GND. The oscillator frequency is set by terminating RT with an external resistor to GND. During low V_{CC} conditions, the UVLO circuit turns the output off until V_{CC} recovers to its normal operating range.

■ FEATURES

* Complete PWM power control
* 3.6-V to 40-V operation
* Internal under voltage-lockout circuit
* Internal short-circuit protection
* Oscillator frequency : 20kHz to 500kHz
* Variable dead timer provides control over total range

■ ORDERING INFORMATION

Ordering Number		Package	Packing
Lead Free	Halogen Free		
TL5001L-D08-T	TL5001G-D08-T	DIP-8	Tube
TL5001L-S08-R	TL5001G-S08-R	SOP-8	Tape Reel
TL5001L-S08-T	TL5001G-S08-T	SOP-8	Tube

TL5001L-D08-R
(1)Packing Type
(2)Package Type
(3)Lead Free

(1) R: Tape Reel, T: Tube
(2) D08: DIP-8, S08: SOP-8
(3) G: Halogen Free, L: Lead Free

Copyright © 2012 Unisonic Technologies Co., Ltd

■ PIN CONFIGURATION

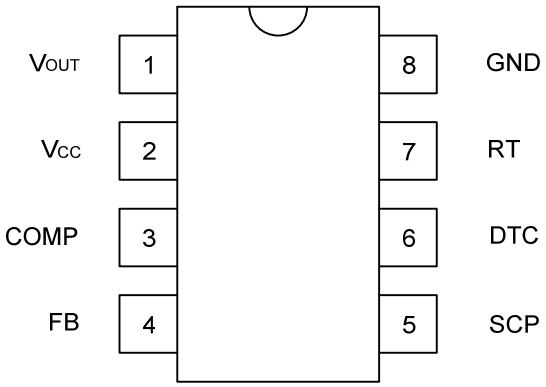

■ ABSOLUTE MAXIMUM RATINGS

PARAMETER	SYMBOL	RATINGS	UNIT
Supply Voltage (Note 1)	V_{CC}	41	V
Amplifier Input Voltage	$V_{I(FB)}$	20	V
Output Voltage	V_{OUT}	51	V
Output Current	I_{OUT}	21	mA
Output Peak Current	$I_{O(PEAK)}$	100	mA
Continuous Total Power Dissipation	See dissipation rating table		
Operating Ambient Temperature Range	T_{OPR}	-20 ~ +85	°C
Storage Temperature Range	T_{STG}	-65 ~ +150	°C

Note: 1. All voltage values are with respect to the network ground terminal.
2. Absolute maximum ratings are those values beyond which the device could be permanently damaged. Absolute maximum ratings are stress ratings only and functional device operation is not implied.

■ DISSIPATION RATING TABLE

PACKAGE	T_A≤25°C POWER RATING	DERATING FACTOR ABOVE T_A=25°C	T_A=70°C POWER RATING	T_A=70°C POWER RATING	T_A=70°C POWER RATING
DIP-8	1000mW	8.0mW/°C	640mW	520mW	200mW
SOP-8	725mW	5.8mW/°C	464mW	377mW	145mW

■ RECOMMENDED OPERATING CONDITIONS

PARAMETER	SYMBOL	MIN	MAX	UNIT
Supply Voltage	V_{CC}	3.6	40	V
Amplifier Input Voltage	$V_{I(FB)}$	0	1.5	V
Output Voltage	V_{OUT}		50	V
Output Current	I_{OUT}		20	mA
COMP Source Current			45	μA
COMP dc Load Resistance		100		kΩ
Oscillator Timing resistor	R_T	15	250	kΩ
Oscillator Frequency	f_{OSC}	20	500	kHz
Operating Ambient Temperature Range	T_A	-20	85	°C

■ ELECTRICAL CHARACTERISTICS OVER RECOMMENDED OPERATING FREE-AIR TEMPERATURE RANGE (V_{CC}=6V, f_{OSC}=100kHz, all typical values at T_A=25°C, unless otherwise noted)

PARAMETER		SYMBOL	TEST CONDITIONS	MIN	TYP	MAX	UNIT
REFERENCE							
Output Voltage		V_{OUT}	COMP Connected to FB	0.95	1	1.05	V
Input Regulation			V_{CC}=3.6V ~ 40V		2	12.5	mV
Output Voltage Change with Temperature			T_A= -20°C ~ 25°C	-10	-1	10	mV/V
			T_A= 25°C ~ 85°C	-10	2	10	
UNDERVOLTAGE LOCKOUT							
Threshold Voltage	Upper	V_{THR}	T_A= 25°C		3		V
	Lower		T_A= 25°C		2.8		V
	Reset		T_A= 25°C	2.1	2.55		V
Hysteresis			T_A= 25°C	100	200		mV
SHORT CIRCUIT PROTECTION							
SCP Threshold voltage			T_A= 25°C	0.95	1.00	1.05	V
SCP Voltage, Latched			No pullup	140	185	230	mV
SCP Voltage, UVLO Standby			No pullup		60	120	mV
Input Source Current			T_A= 25°C	-10	-15	-20	μA
SCP Comparator 1 Threshold Voltage					1.5		V
OSCILLATOR							
Frequency		f	R_T=100kΩ		100		kHz
Standard Deviation of Frequency					15		kHz
Frequency Change with Voltage			V_{CC}=3.6V ~ 40V		1		kHz
Frequency Change with Temperature			T_A= -40°C ~ 25°C	-4	-0.4	4	kHz
			T_A= -20°C ~ 25°C	-4	-0.4	4	kHz
			T_A= 25°C ~ 85°C	-4	-0.2	4	kHz
Voltage at R_T		V_{RT}			1		V
DEAD-TIME CONTROL							
Output (source) Current		$I_{O(SOURCE)}$	$V_{(DT)}$=1.5V (Note)	0.9*I_{RT}		1.1*I_{RT}	μA
Input Threshold Voltage		$V_{I(THR)}$	Duty cycle=0%	0.5	0.7		V
			Duty cycle=100%		1.3	1.5	
ERROR AMPLIFIER							
Input Voltage		V_{IN}	V_{CC}=3.6V ~ 40V	0		1.5	V
Input Bias Current		$I_{I(BIAS)}$			-160	-500	nA
Output Voltage Swing	Positive	$V_{O(SW)}$		1.5	2.3		V
	Negative				0.3	0.4	V
Open-Loop Voltage Amplification		G_V			80		dB
Unity-Gain Bandwidth					1.5		MHz
Output (sink) Current		$I_{O(SINK)}$	$V_{I(FB)}$=1.2V, COMP=1V	100	600		μA
Output (source) Current		$I_{O(SOURCE)}$	$V_{I(FB)}$=0.8V, COMP=1V	-45	-70		μA
OUTPUT							
Output Saturation Voltage		$V_{O(SAT)}$	I_{OUT}=10mA		1.5	2	V
Off-State Current		I_{OFF}	V_{OUT}=50V,Vcc=0			10	μA
			V_{OU}T=50V			10	
Short-Circuit Output Current		$I_{O(SC)}$	V_{OUT}=6V		40		mA
TOTAL DEVICE							
Standby Supply Current (Off state)		I_{STN-BY}			1	1.5	mA
Average Supply Current			R_T=100kΩ		1.4	2.1	mA

Note: Output source current at R_T

■ SCHEMATIC FOR TYPICAL APPLICATION

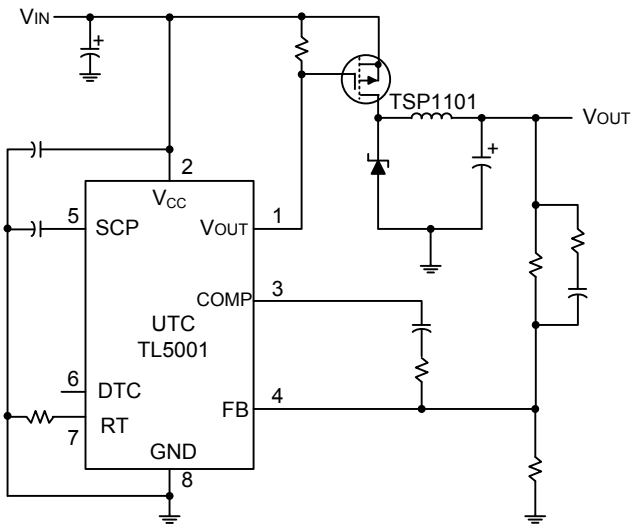

■ FUNCTIONAL BLOCK DIAGRAM

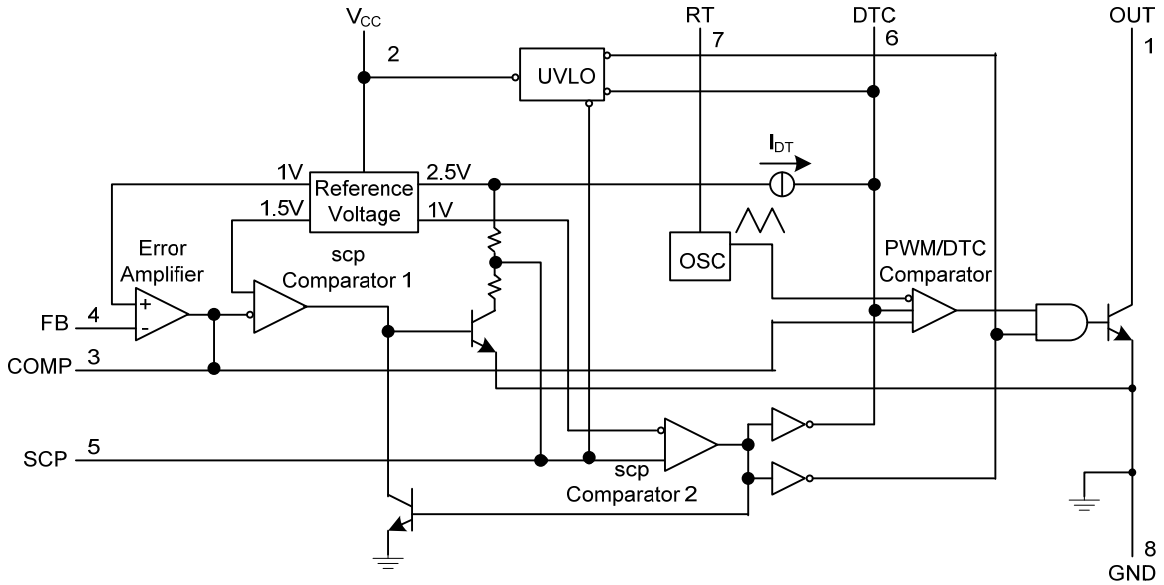

■ DETAILED DESCRIPTION

VOLTAGE REFERENCE

A 2.5-V regulator operating from V_{CC} is used to power the internal circuitry of the TL5001 and as a reference for the error amplifier and SCP circuit. A resistive divider provides a 1-V reference for the error amplifier non-inverting input which typically is within 2% of nominal over the operating temperature range.

ERROR AMPLIFIER

The error amplifier compares a sample of the dc-to-dc converter output voltage to the 1-V reference and generates an error signal for the PWM comparator. The dc-to-dc converter output voltage is set by selecting the error –amplifier gain (see Fig. 1), using the following expression.

$$V_{OUT} = (1+R1/R2)\ (1V)$$

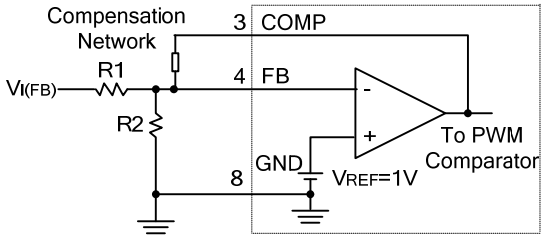

Fig. 1 Error-Amplifier Gain Setting

The error-amplifier output is brought out as COMP for use in compensating the dc-to-dc converter control loop for stability. Because the amplifier can only source 45μA, the total dc load resistance should be 100kΩ or more.

OSCILLATOR/PWM

The oscillator frequency (f_{OSC}) can be set between 20kHz and 500kHz by connecting a resistor between RT and GND .Acceptable resistor values range from 15 kΩ to 250 kΩ. The oscillator frequency can be determined by using the graph shown in Fig. 5.

The oscillator output is a triangular wave with a minimum value of approximately 0.7V and a maximum value of approximately 1.3V. The PWM comparator compares the error-amplifier output voltage and the DTC input voltage to the triangular wave and turns the output transistor off whenever the triangular wave is greater than the lesser of the two inputs.

■ DETAILED DESCRIPTION(Cont.)

DEAD TIME CONTORL (DTC)

DTC provides a means of limiting the output-switch duty cycle to a value less than 100%, which is critical for boost and flyback converters. A current source generates a reference current (IDT) at DTC that is nominally equal to the current at the oscillator timing terminal, RT. Connecting a resistor between DTC and GND generates a dead-time reference voltage (VDT), which the PWM/DTC comparator compares to the oscillator triangle wave as described in the previous section. Nominally, the maximum duty cycle is 0% when VDT is 0.7V or less and 100% when VDT is 1.3V or greater. Because the triangle wave amplitude is a function of frequency and the source impedance of RT is relatively high(1250Ω),choosing RDT for a specific maximum duty cycle, D, is accomplished using the following equation and the voltage limits for the frequency in question as found in Fig. 11($V_{OSC(MAX)}$ and $V_{OSC(MIN)}$ are the maximum and minimum oscillator levels):

$$R_{DT}=(R_T+1250)[D(V_{OSC(MAX)}-V_{OSC(MIN)})+V_{OSC(MIN)}]$$

Where

R_{DT} and R_T are in ohms, D in decimal

Soft start can be implemented by paralleling the DTC resistor with a capacitor (C_{DT}) as shown in Fig. 2. During soft start, the voltage at DTC is derived by the following equation:

$$V_{DT}\approx I_{DT}R_{DT}(1-e^{(-t/RDTCDT)})$$

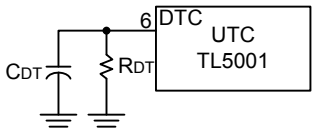

Fig. 2 Soft- Start Circuit

If the dc-to-dc converter must be in regulation within a specified period of time, the time constant, RDTCDT, should be t0/3 to t0/5.The UTC **TL5001** remains off unit VDT≈0.7V, the minimum ramp value. CDT is discharged every time UVLO or SCP becomes active.

UNDERVOLTAGE-LOCKOUT (UVLO) PROTECTION

The undervoltage-lockout circuit turns the output transistor off and resets the SCP latch whenever the supply voltage drops too low (approximately 3V at 25℃) for proper operation. A hysteresis voltage of 200mV eliminates false triggering on noise and chattering.

■ DETAILED DESCRIPTION(Cont.)

SHORT-CIRCUIT PROTECTION (SCP)

The UTC **TL5001** includes short-circuit protection (see Fig. 3), which turns the power switch off to prevent damage when the converter output is shorted. When activated, The SCP prevents the switch from being turned on until the internal latching circuit is reset. The circuit is reset by reducing the input voltage until UVLO becomes active or until the SCP terminal is pulled to ground externally.

When a short circuit occurs, the error-amplifier output at COMP rises to increase the power-switch duty cycle in an attempt to maintain the output voltage. SCP comparator 1 starts an RC timing circuit when COMP exceeds 1.5V.If the short is removed and the error-amplifier output drops below 1.5V before time out, normal converter operation continues. If the fault is still present at the end of the time-out period, the time sets the latching circuit and turns off the UTC **TL5001** output transistor.

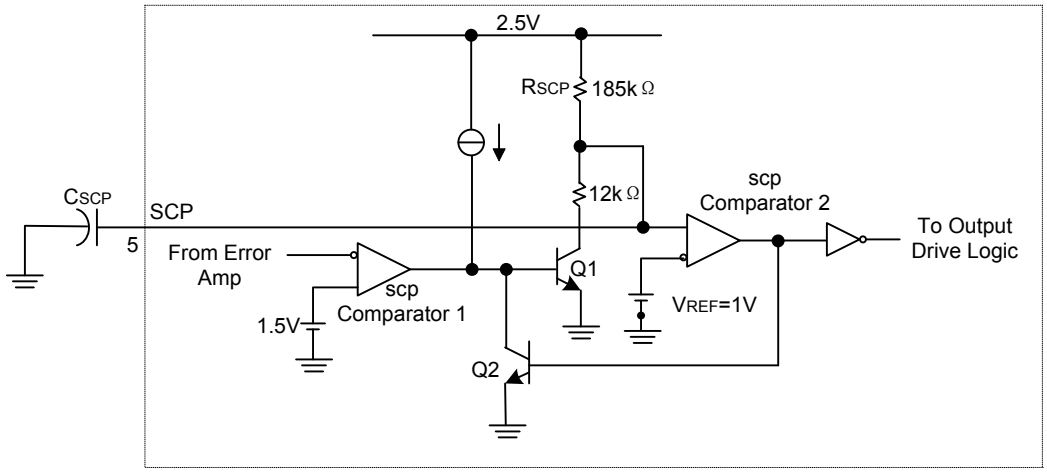

Fig. 3 SCP Circuit

The timer operates by charging an external capacitor (C_{SCP}),connected between the SCP terminal and ground, towards 2.5V through a 185kΩ resistor (R_{SCP}).The circuit begins charging from an initial voltage of approximately 185mV and times out when capacitor voltage reaches 1V.The output of SCP comparator 2 then goes high, turns on Q2,and latches the timer circuit. The expression for setting the SCP time period is derived from the following equation:

$$V_{SCP} = (2.5-0.185)(1-e^{-t/\tau})+0.185$$

Where

$$\iota = R_{SCP}C_{SCP}$$

The end of the time-out period, t_{SCP}, occurs when V_{SCP}=1V. Solving for C_{SCP} yields:

$$C_{SCP} = 12.46 * t_{SCP}$$

Where

t is in seconds, C in μF

t_{SCP} must be much longer (generally 10 to 15 times) than the converter start-up period or the converter will not start.

OUTPUT TRANSISTOR

The output of the UTC **TL5001** is an open-collector transistor with a maximum collector current rating of 21mA and a voltage rating of 51V.The output is turned on under the following conditions: the oscillator triangle wave is lower than both the DTC voltage and the error-amplifier output voltage, the UVLO circuit is inactive, and the short-circuit protection circuit is inactive.

■ PARAMETER MEASUREMENT INFORMATION

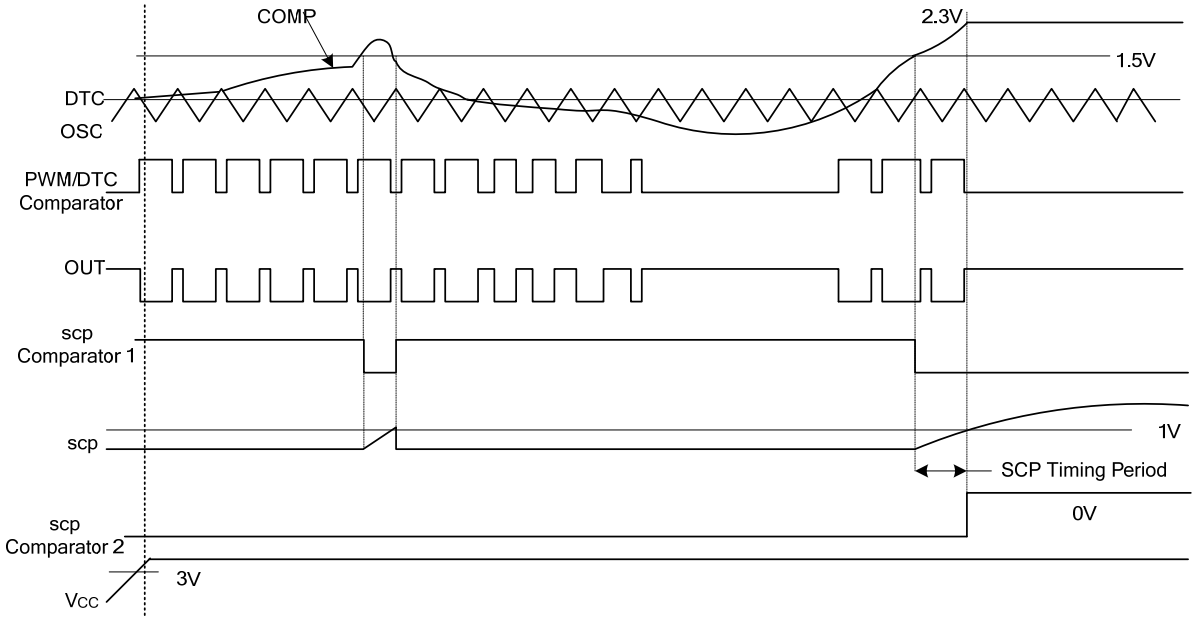

Note A:The waveforms show timing characteristics for an intermittent short circuit and a longer short circuit that is sufficient to activate SCP.

Fig. 4 PWM Timing Diagram

■ APPLICATION INFORMATION

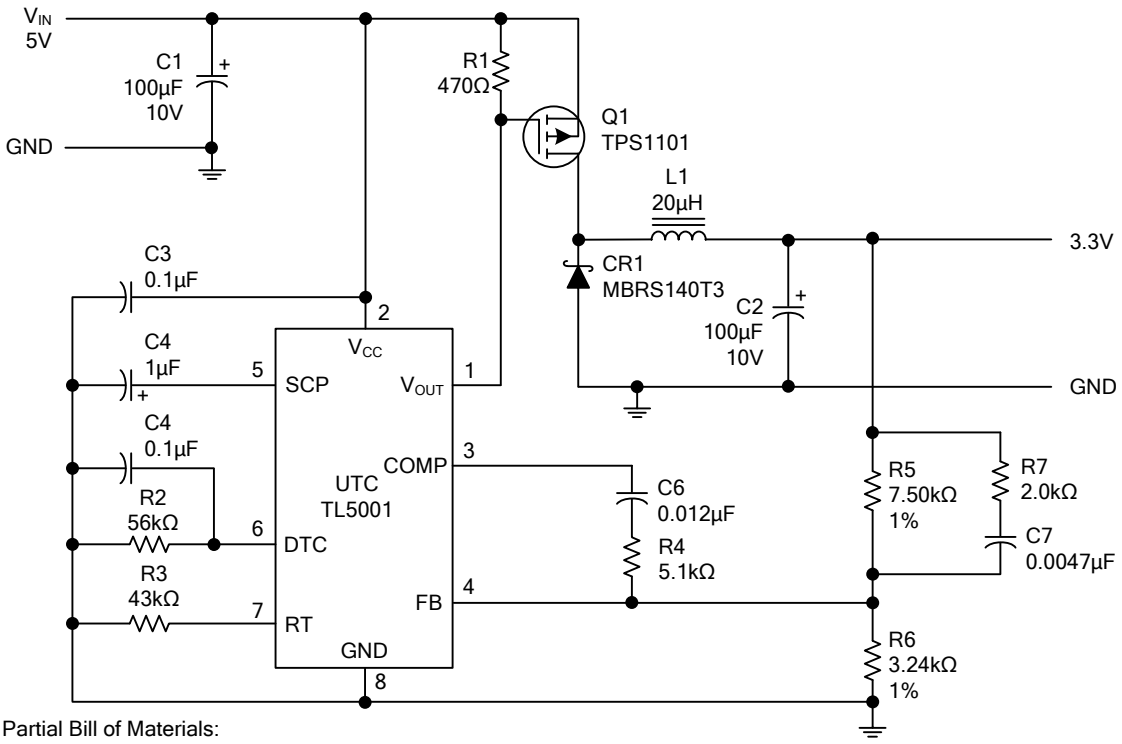

Partial Bill of Materials:

Q1	TPS1101	Texas Instruments
L1	CTX20-1 or 23 turns of #28 wire on Micrometals No. T50-26B core	Coiltronics
C1	TPSD 107M010R0100	AVX
C2	TPSD 107M010R0100	AVX
CR1	MBRS 140T3	Motorola

NOTES: A. Frequency = 200KHz
B. Duty cycle = 90% max
C. Soft-start time constant (TC) = 5.6ms
D. SCP TC = 70msA

Fig. 5 Step-Down Converter

■ TYPICAL CHARACTERISTICS

Oscillator Frequency vs Timing Resistance

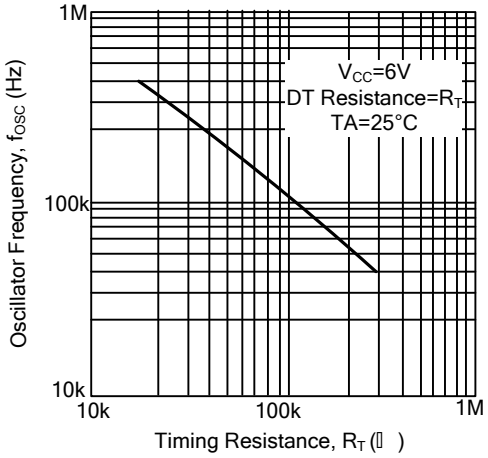

Oscillator Frequency vs Ambient Temperature

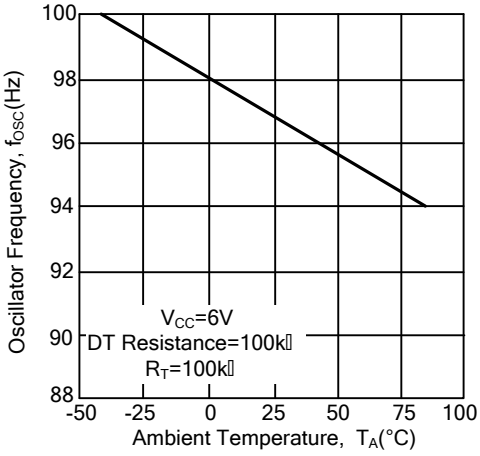

Reference Output Voltage vs Power -Supply Voltage

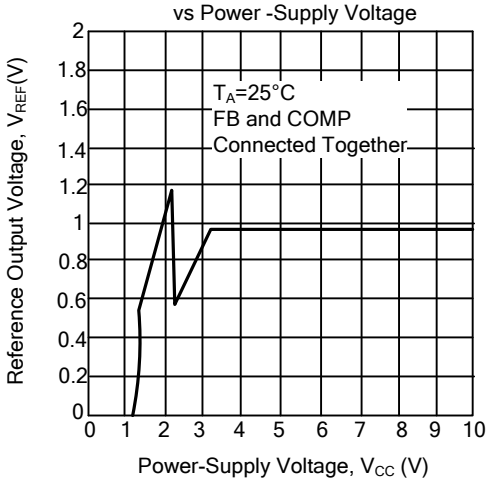

Reference Output Voltage Fluctuation vs Ambient Temperature

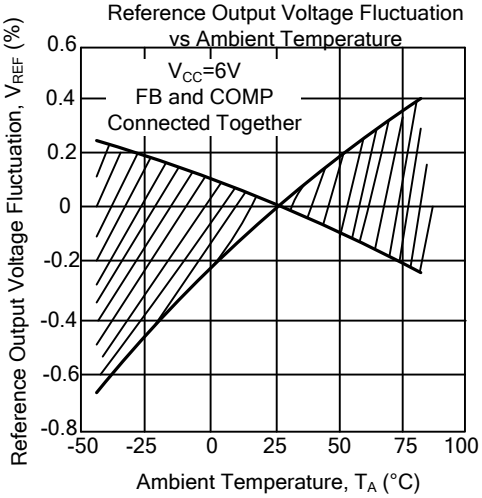

Average Supply Current vs Power -Supply Voltage

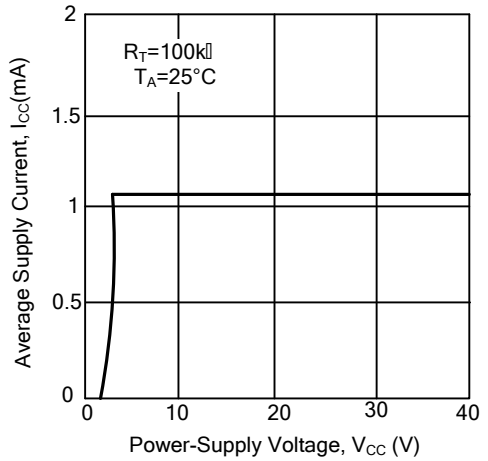

Average Supply Current vs Ambient Temperature

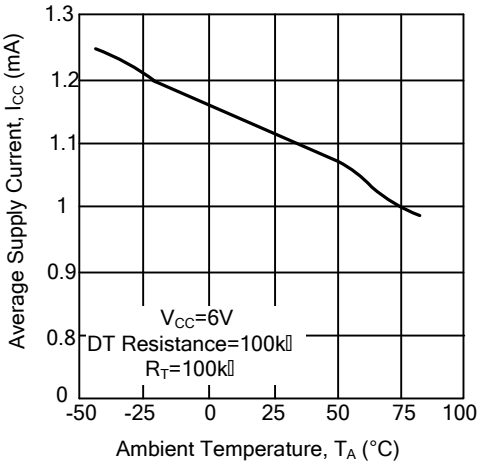

■ TYPICAL CHARACTERISTICS(Cont.)

PWM Triangle Wave Amplitude Voltage vs Oscillator Frequency

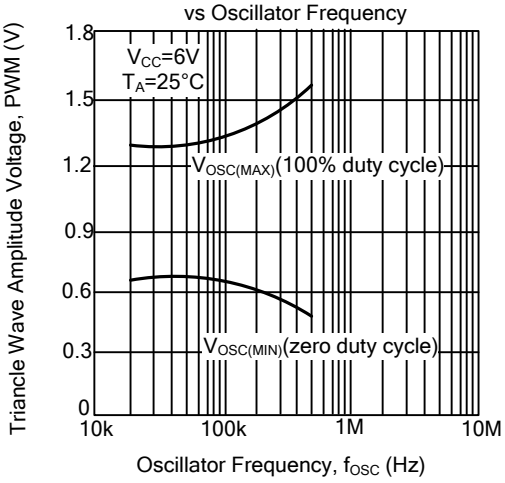

Error Amplifier Output Voltage vs Output(Sink)Current

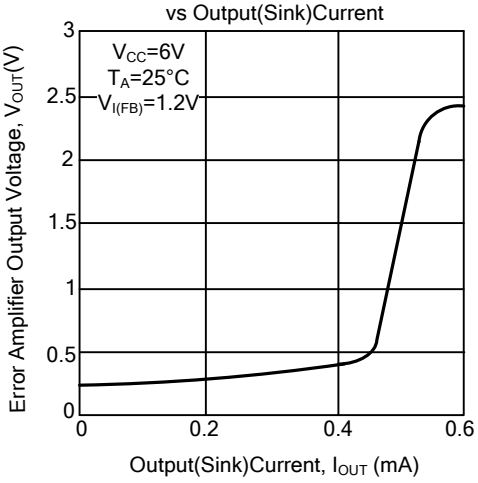

Error Amplifier Output Voltage vs Output(Source)Current

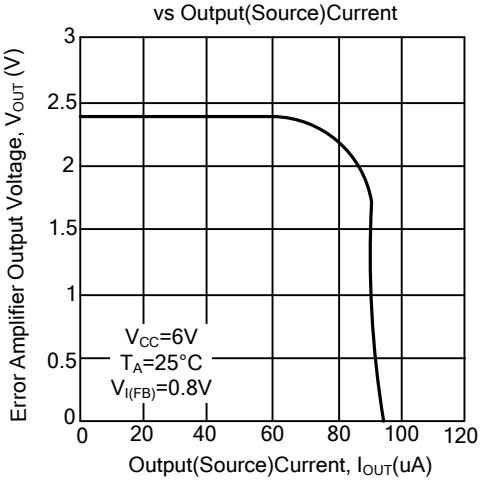

Error Amplifier Output Voltage vs Ambient Temperature

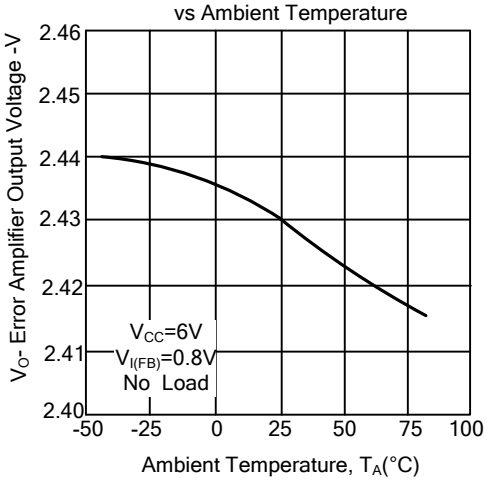

Error Amplifier Output Voltage vs Ambient Temperature

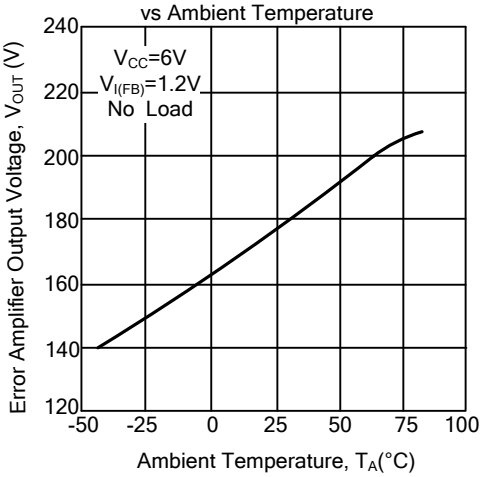

Error Amplifier Open-Loop Gain and Phase Shift vs Frequency

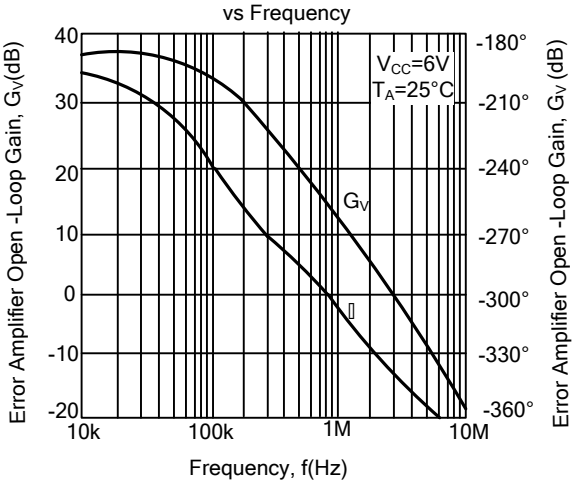

■ TYPICAL CHARACTERISTICS(Cont.)

Output Duty Cycle vs DTC Voltage

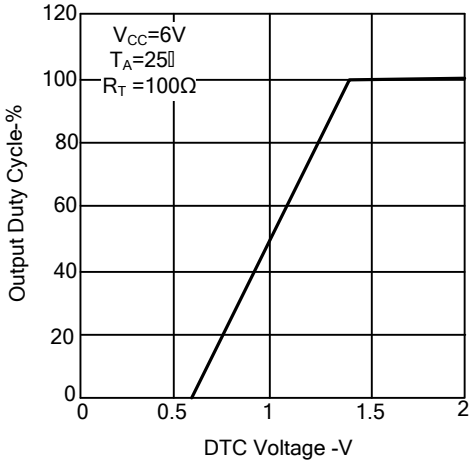

Scp-Time-Output Period vs SCP Capacitance

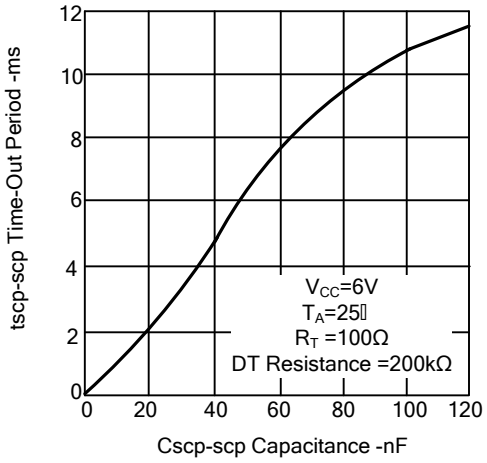

DTC Output Current vs RT Output Current

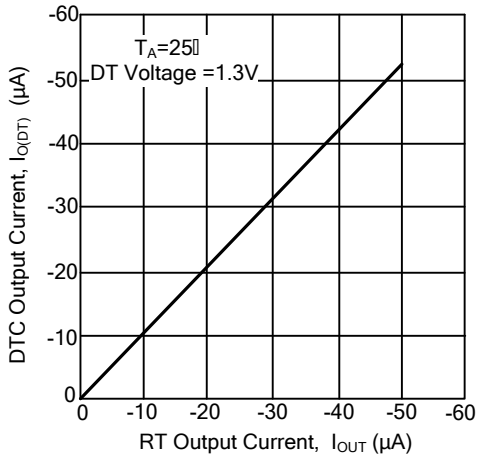

Output Saturation Voltage vs Output (Sink) Current

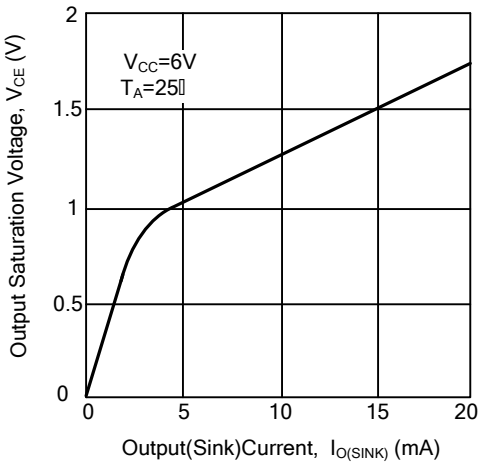

UTC assumes no responsibility for equipment failures that result from using products at values that exceed, even momentarily, rated values (such as maximum ratings, operating condition ranges, or other parameters) listed in products specifications of any and all UTC products described or contained herein. UTC products are not designed for use in life support appliances, devices or systems where malfunction of these products can be reasonably expected to result in personal injury. Reproduction in whole or in part is prohibited without the prior written consent of the copyright owner. The information presented in this document does not form part of any quotation or contract, is believed to be accurate and reliable and may be changed without notice.