SLVS004C – APRIL 1979 – REVISED JULY 1999

- **Output Voltage Range Adjustable From 1.2 V to 32 V When Used With an External Resistor Divider**
- **Output Current Capability of 100 mA**
- **Input Regulation Typically 0.01% Per Input-Voltage Change**
- **Output Regulation Typically 0.5%**
- **Ripple Rejection Typically 80 dB**

D PACKAGE
(TOP VIEW)

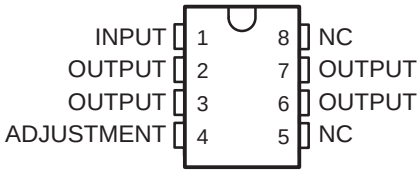

NC – No internal connection
OUTPUT terminals are all internally connected.

LP PACKAGE
(TOP VIEW)

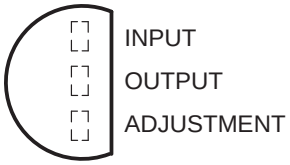

description

The TL317 is an adjustable three-terminal positive-voltage regulator capable of supplying 100 mA over an output-voltage range of 1.2 V to 32 V. It is exceptionally easy to use and requires only two external resistors to set the output voltage.

In addition to higher performance than fixed regulators, this regulator offers full overload protection available only in integrated circuits. Included on the chip are current-limiting and thermal-overload protection. All overload-protection circuitry remains fully functional, even when ADJUSTMENT is disconnected. Normally, no capacitors are needed unless the device is situated far from the input filter capacitors, in which case an input bypass is needed. An optional output capacitor can be added to improve transient response. ADJUSTMENT can be bypassed to achieve very high ripple rejection, which is difficult to achieve with standard three-terminal regulators.

In addition to replacing fixed regulators, the TL317 regulator is useful in a wide variety of other applications. Since the regulator is floating and sees only the input-to-output differential voltage, supplies of several hundred volts can be regulated as long as the maximum input-to-output differential is not exceeded. Its primary application is that of a programmable output regulator, but by connecting a fixed resistor between ADJUSTMENT and OUTPUT, this device can be used as a precision current regulator. Supplies with electronic shutdown can be achieved by clamping ADJUSTMENT to ground, programming the output to 1.2 V, where most loads draw little current.

The TL317C is characterized for operation over the virtual junction temperature range of 0°C to 125°C.

AVAILABLE OPTIONS

T_J	PACKAGED DEVICES		CHIP FORM (Y)
	SMALL OUTLINE (D)	PLASTIC (LP)	
0°C to 125°C	TL317CD	TL317CLP	TL317Y

The D and LP packages are available taped and reeled. Add the suffix R to device type (e.g., TL317CDR). Chip forms are tested at 25°C.

Please be aware that an important notice concerning availability, standard warranty, and use in critical applications of Texas Instruments semiconductor products and disclaimers thereto appears at the end of this data sheet.

PRODUCTION DATA information is current as of publication date. Products conform to specifications per the terms of Texas Instruments standard warranty. Production processing does not necessarily include testing of all parameters.

Copyright © 1999, Texas Instruments Incorporated

schematic

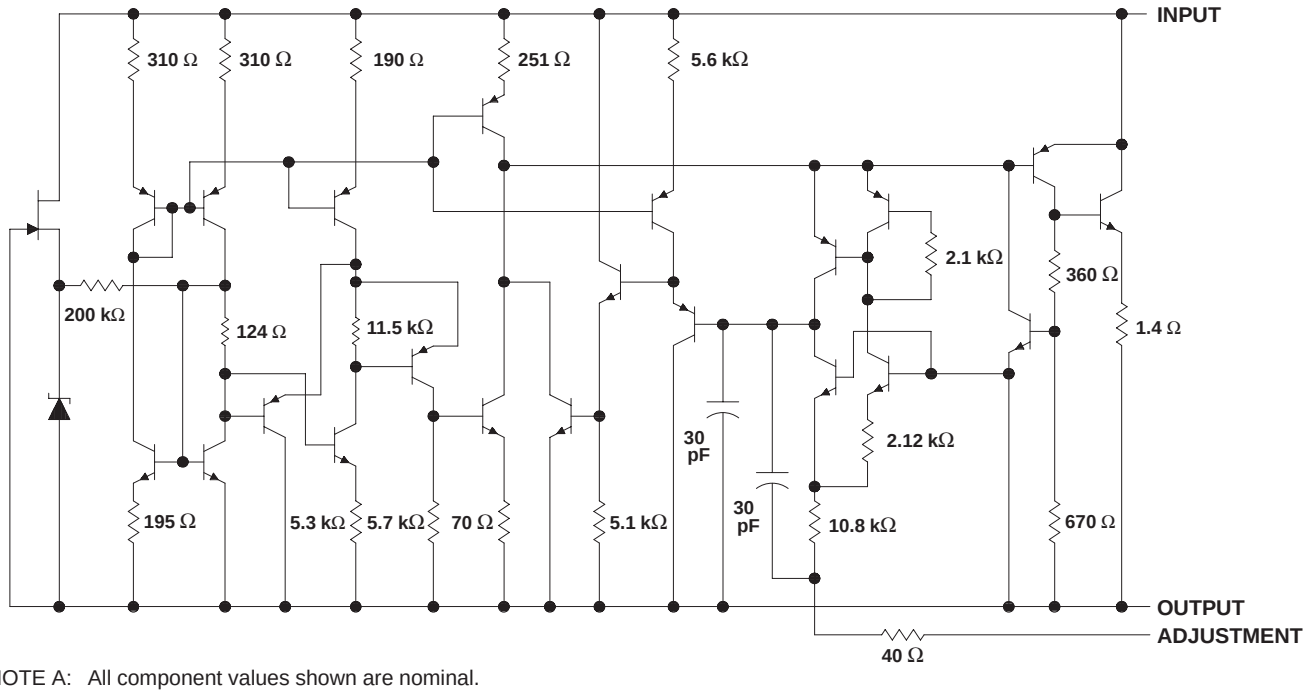

NOTE A: All component values shown are nominal.

absolute maximum ratings over operating temperature range (unless otherwise noted)†

Input-to-output differential voltage, $V_I – V_O$ . . . . . 35 V
Operating free-air, T_A, case, or virtual-junction temperature range, T_J: TL317C . . . . . 0°C to 150°C
Package thermal impedance, θ_{JA} (see Notes 1 and 2): D package . . . . . 97°C/W
LP package . . . . . 156°C/W
Lead temperature 1,6 mm (1/16 inch) from case for 10 seconds . . . . . 260°C
Storage temperature range, T_{stg} . . . . . –65°C to 150°C

† Stresses beyond those listed under “absolute maximum ratings” may cause permanent damage to the device. These are stress ratings only, and functional operation of the device at these or any other conditions beyond those indicated under “recommended operating conditions” is not implied. Exposure to absolute-maximum-rated conditions for extended periods may affect device reliability.

NOTES: 1. Maximum power dissipation is a function of $T_J(max)$, θ_{JA}, and T_A. The maximum allowable power dissipation at any allowable ambient temperature is $P_D = (T_J(max) – T_A)/\theta_{JA}$. Operating at the absolute maximum T_J of 150°C can impact reliability.
2. The package thermal impedance is calculated in accordance with JESD 51, except for through-hole packages, which use a trace length of zero.

recommended operating conditions

		MIN	MAX	UNIT
Input-to-output voltage differential, $V_I – V_O$			35	V
Output current, I_O		2.5	100	mA
Operating virtual-junction temperature, T_J	TL317C	0	125	°C

electrical characteristics over recommended operating virtual-junction temperature range (unless otherwise noted)

PARAMETER	TEST CONDITIONS†		TL317C			UNIT
			MIN	TYP	MAX	
Input voltage regulation (see Note 3)	$V_I - V_O$ = 5 V to 35 V	T_J = 25°C		0.01	0.02	%V
		I_O = 2.5 mA to 100 mA		0.02	0.05	
Ripple regulation	V_O = 10 V,	f = 120 Hz		65		dB
	V_O = 10 V, 10-μF capacitor between ADJUSTMENT and ground		66	80		
Output voltage regulation	V_I = 5 V to 35 V, I_O = 2.5 mA to 100 mA, T_J = 25°C	$V_O \le 5$ V		25		mV
		$V_O \ge 5$ V		5		mV/V
	V_I = 5 V to 35 V, I_O = 2.5 mA to 100 mA	$V_O \le 5$ V		50		mV
		$V_O \ge 5$ V		10		mV/V
Output voltage change with temperature	T_J = 0°C to 125°C			10		mV/V
Output voltage long-term drift	After 1000 hours at T_J = 125°C and $V_I - V_O$ = 35 V			3	10	mV/V
Output noise voltage	f = 10 Hz to 10 kHz,	T_J = 25°C		30		μV/V
Minimum output current to maintain regulation	$V_I - V_O$ = 35 V			1.5	2.5	mA
Peak output current	$V_I - V_O \le 35$ V		100	200		mA
ADJUSTMENT current				50	100	μA
Change in ADJUSTMENT current	$V_I - V_O$ = 2.5 V to 35 V,	I_O = 2.5 mA to 100 mA		0.2	5	μA
Reference voltage (output to ADJUSTMENT)	$V_I - V_O$ = 5 V to 35 V, P ≤ rated dissipation	I_O = 2.5 mA to 100 mA,	1.2	1.25	1.3	V

† Unless otherwise noted, these specifications apply for the following test conditions: $V_I - V_O$ = 5 V and I_O = 40 mA. Pulse-testing techniques must be used that maintain the junction temperature as close to the ambient temperature as possible. All characteristics are measured with a 0.1-μF capacitor across the input and a 1-μF capacitor across the output.

NOTE 3: Input voltage regulation is expressed here as the percentage change in output voltage per 1-V change at the input.

electrical characteristics over recommended operating conditions, T_J = 25°C (unless otherwise noted)

PARAMETER	TEST CONDITIONS†		TL317Y			UNIT
			MIN	TYP	MAX	
Input voltage regulation (see Note 3)	$V_I - V_O$ = 5 V to 35 V			0.01		%V
Ripple regulation	V_O = 10 V,	f = 120 Hz		65		dB
	V_O = 10 V, 10-μF capacitor between ADJUSTMENT and ground			80		
Output voltage regulation	I_O = 2.5 mA to 100 mA	$V_O \le 5$ V		25		mV
		$V_O \ge 5$ V		5		mV/V
Output noise voltage	f = 10 Hz to 10 kHz			30		μV/V
Minimum output current to maintain regulation	$V_I - V_O$ = 35 V			1.5		mA
Peak output current	$V_I - V_O \le 35$ V			200		mA
ADJUSTMENT current				50		μA
Change in ADJUSTMENT current	$V_I - V_O$ = 2.5 V to 35 V,	I_O = 2.5 mA to 100 mA		0.2		μA
Reference voltage (output to ADJUSTMENT)	$V_I - V_O$ = 5 V to 35 V, P ≤ rated dissipation	I_O = 2.5 mA to 100 mA,		1.25		V

† Unless otherwise noted, these specifications apply for the following test conditions: $V_I - V_O$ = 5 V and I_O = 40 mA. Pulse-testing techniques must be used that maintain the junction temperature as close to the ambient temperature as possible. All characteristics are measured with a 0.1-μF capacitor across the input and a 1-μF capacitor across the output.

NOTE 3: Input voltage regulation is expressed here as the percentage change in output voltage per 1-V change at the input.

APPLICATION INFORMATION

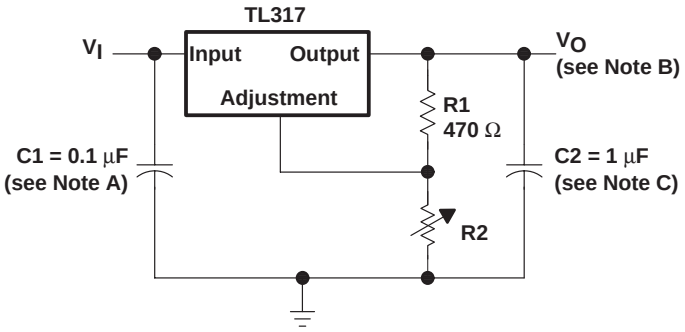

NOTES: A. Use of an input bypass capacitor is recommended if regulator is far from the filter capacitors.

B. Output voltage is calculated from the equation:

$$V_O = V_{ref}\left(1 + \frac{R2}{R1}\right)$$

where: V_{ref} equals the difference between OUTPUT and ADJUSTMENT voltages (≈1.25 V).

C. Use of an output capacitor improves transient response but is optional.

Figure 1. Adjustable Voltage Regulator

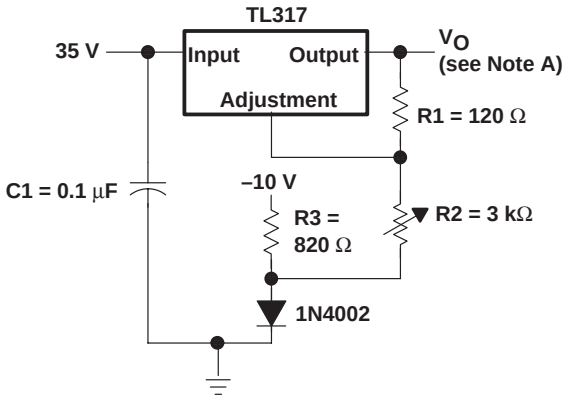

NOTE A: Output voltage is calculated from the equation:

$$V_O = V_{ref}\left(1 + \frac{R2 + R3}{R1}\right) - 10\ V$$

where: V_{ref} equals the difference between OUTPUT and ADJUSTMENT voltages (≈1.25 V).

Figure 2. 0-V to 30-V Regulator Circuit

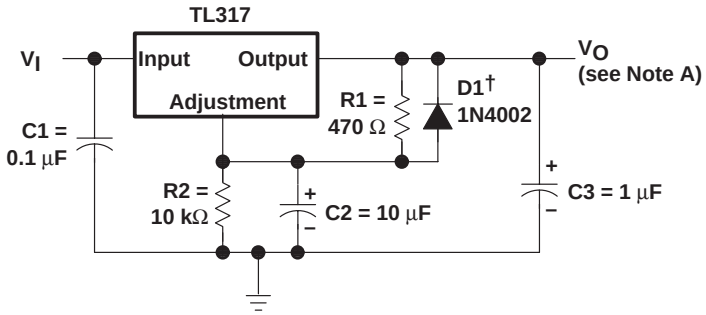

† D1 discharges C2 if output is shorted to ground.

NOTE A: Use of an output capacitor improves transient response but is optional.

Figure 3. Regulator Circuit With Improved Ripple Rejection

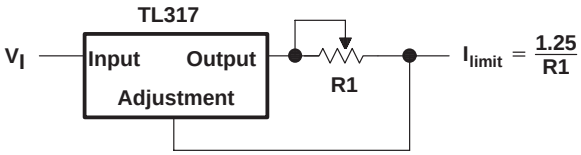

Figure 4. Precision Current-Limiter Circuit

APPLICATION INFORMATION

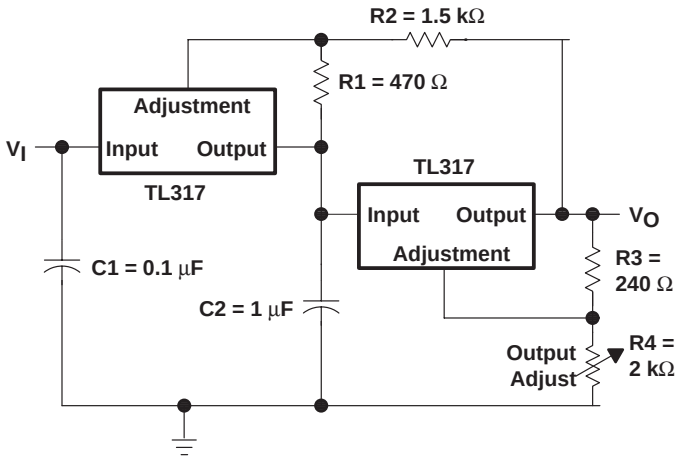

Figure 5. Tracking Preregulator Circuit

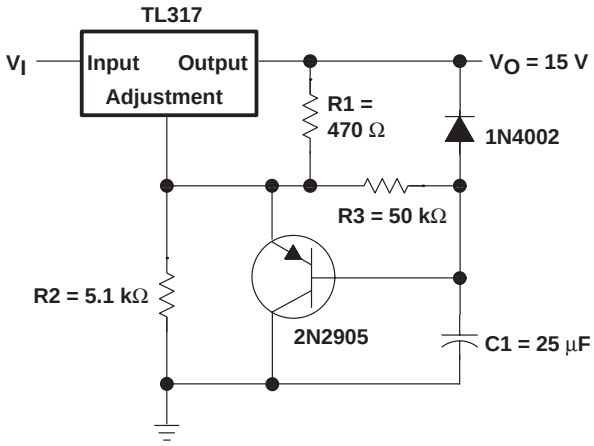

Figure 6. Slow Turnon 15-V Regulator Circuit

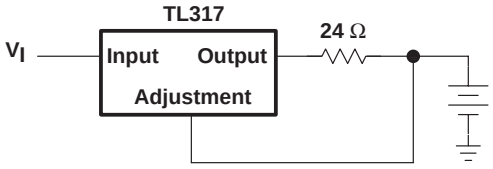

Figure 7. 50-mA Constant-Current Battery Charger Circuit

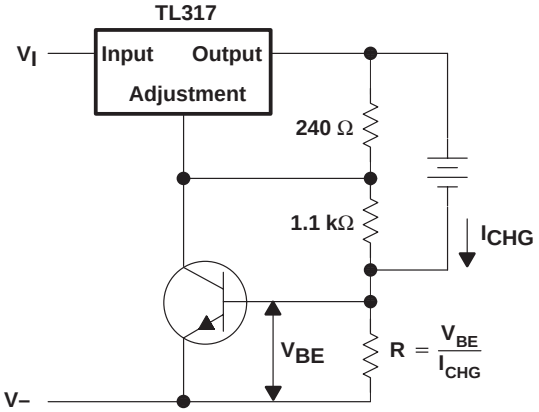

Figure 8. Current-Limited 6-V Charger

APPLICATION INFORMATION

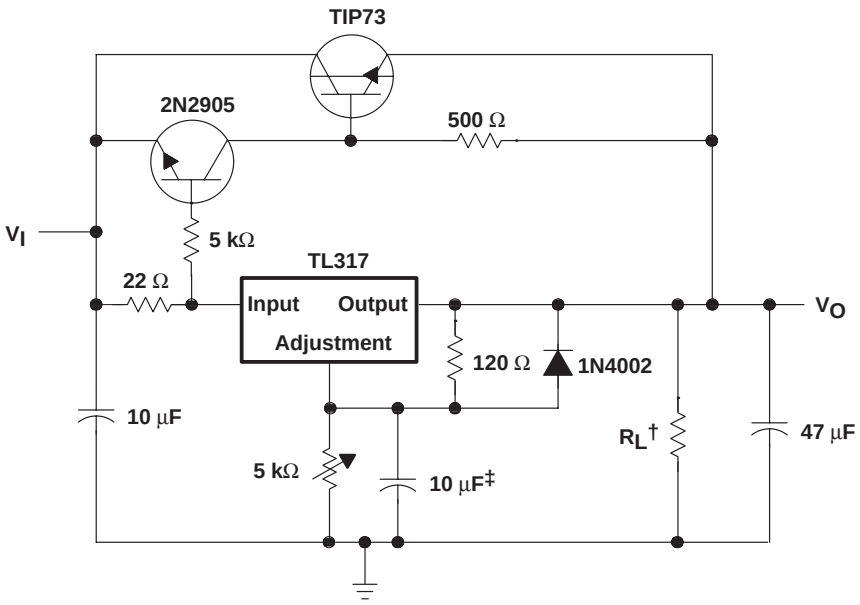

† Minimum load current is 30 mA.
‡ Optional capacitor improves ripple rejection

Figure 9. High-Current Adjustable Regulator

IMPORTANT NOTICE

Texas Instruments and its subsidiaries (TI) reserve the right to make changes to their products or to discontinue any product or service without notice, and advise customers to obtain the latest version of relevant information to verify, before placing orders, that information being relied on is current and complete. All products are sold subject to the terms and conditions of sale supplied at the time of order acknowledgement, including those pertaining to warranty, patent infringement, and limitation of liability.

TI warrants performance of its semiconductor products to the specifications applicable at the time of sale in accordance with TI's standard warranty. Testing and other quality control techniques are utilized to the extent TI deems necessary to support this warranty. Specific testing of all parameters of each device is not necessarily performed, except those mandated by government requirements.

CERTAIN APPLICATIONS USING SEMICONDUCTOR PRODUCTS MAY INVOLVE POTENTIAL RISKS OF DEATH, PERSONAL INJURY, OR SEVERE PROPERTY OR ENVIRONMENTAL DAMAGE ("CRITICAL APPLICATIONS"). TI SEMICONDUCTOR PRODUCTS ARE NOT DESIGNED, AUTHORIZED, OR WARRANTED TO BE SUITABLE FOR USE IN LIFE-SUPPORT DEVICES OR SYSTEMS OR OTHER CRITICAL APPLICATIONS. INCLUSION OF TI PRODUCTS IN SUCH APPLICATIONS IS UNDERSTOOD TO BE FULLY AT THE CUSTOMER'S RISK.

In order to minimize risks associated with the customer's applications, adequate design and operating safeguards must be provided by the customer to minimize inherent or procedural hazards.

TI assumes no liability for applications assistance or customer product design. TI does not warrant or represent that any license, either express or implied, is granted under any patent right, copyright, mask work right, or other intellectual property right of TI covering or relating to any combination, machine, or process in which such semiconductor products or services might be or are used. TI's publication of information regarding any third party's products or services does not constitute TI's approval, warranty or endorsement thereof.

Copyright © 1999, Texas Instruments Incorporated