TL2575, TL2575HV
1-A SIMPLE STEP-DOWN SWITCHING VOLTAGE REGULATORS

SLVS638B – MAY 2006 – REVISED JANUARY 2007

FEATURES

- **Fixed 3.3-V, 5-V, 12-V, and 15-V Options With ±5% Regulation (Max) Over Line, Load, and Temperature Conditions**
- **Adjustable Option With a Range of 1.23 V to 37 V (57 V for HV Version) and ±4% Regulation (Max) Over Line, Load, and Temperature Conditions**
- **Specified 1-A Output Current**
- **Wide Input Voltage Range…4.75 V to 40 V (60 V for HV Version)**
- **Require Only Four External Components (Fixed Versions) and Use Readily Available Standard Inductors**
- **52-kHz (Typ) Fixed-Frequency Internal Oscillator**
- **TTL Shutdown Capability With 50-μA (Typ) Standby Current**
- **High Efficiency…as High as 88% (Typ)**
- **Thermal Shutdown and Current-Limit Protection With Cycle-by-Cycle Current Limiting**

APPLICATIONS

- **Simple High-Efficiency Step-Down (Buck) Regulators**
- **Pre-Regulators for Linear Regulators**
- **On-Card Switching Regulators**
- **Positive-to-Negative Converters (Buck-Boost)**

KTT (TO-263) PACKAGE
(TOP VIEW)

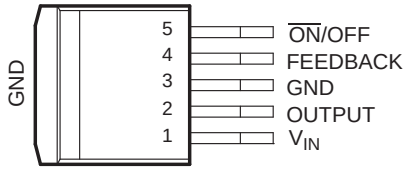

N (PDIP) PACKAGE
(TOP VIEW)

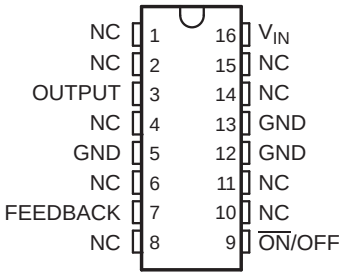

NC − No internal connection

KV (TO-220 STAGGERED LEADS) PACKAGE

(TOP VIEW) **(SIDE VIEW)**

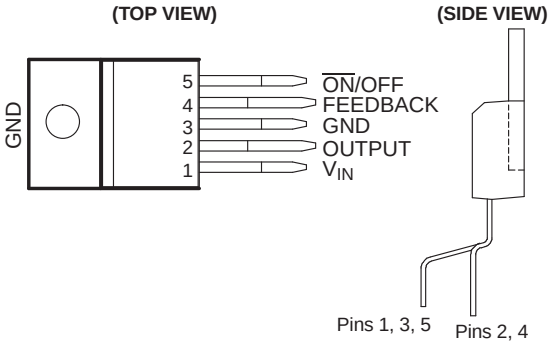

DESCRIPTION/ORDERING INFORMATION

The TL2575 and TL2575HV greatly simplify the design of switching power supplies by conveniently providing all the active functions needed for a step-down (buck) switching regulator in an integrated circuit. Accepting a wide input voltage range of up to 60 V (HV version) and available in fixed output voltages of 3.3 V, 5 V, 12 V, 15 V, or an adjustable-output version, the TL2575 and TL2575HV have an integrated switch capable of delivering 1 A of load current, with excellent line and load regulation. The device also offers internal frequency compensation, a fixed-frequency oscillator, cycle-by-cycle current limiting, and thermal shutdown. In addition, a manual shutdown is available via an external $\overline{\text{ON}}$/OFF pin.

The TL2575 and TL2575HV represent superior alternatives to popular three-terminal linear regulators. Due to their high efficiency, the devices significantly reduce the size of the heatsink and, in many cases, no heatsink is required. Optimized for use with standard series of inductors available from several different manufacturers, the TL2575 and TL2575HV greatly simplify the design of switch-mode power supplies by requiring a minimal addition of only four to six external components for operation.

The TL2575 and TL2575HV are characterized for operation over the virtual junction temperature range of –40°C to 125°C.

Please be aware that an important notice concerning availability, standard warranty, and use in critical applications of Texas Instruments semiconductor products and disclaimers thereto appears at the end of this data sheet.

PowerPAD, PowerFLEX are trademarks of Texas Instruments.

PRODUCTION DATA information is current as of publication date. Products conform to specifications per the terms of the Texas Instruments standard warranty. Production processing does not necessarily include testing of all parameters.

Copyright © 2006–2007, Texas Instruments Incorporated

ORDERING INFORMATION(1)
TL2575 ($V_{IN(MAX)}$ = 40 V)

T_J	V_O (NOM)	PACKAGE(2)		ORDERABLE PART NUMBER	TOP-SIDE MARKING
–40°C to 125°C	3.3 V	PDIP – N	Tube of 25	TL2575-33IN	TL2575-33IN
		TO-263 – KTT	Reel of 500	TL2575-33IKTTR	TL2575-33I
		TO-220 – KV	Tube of 50	TL2575-33IKV	TL2575-33I
	5 V	PDIP – N	Tube of 25	TL2575-05IN	TL2575-05IN
		TO-263 – KTT	Reel of 500	TL2575-05IKTTR	TL2575-05I
		TO-220 – KV	Tube of 50	TL2575-05IKV	TL2575-05I
	12 V	PDIP – N	Tube of 25	TL2575-12IN	TL2575-12IN
		TO-263 – KTT	Reel of 500	TL2575-12IKTTR	TL2575-12I
		TO-220 – KV	Tube of 50	TL2575-12IKV	TL2575-12I
	15 V	PDIP – N	Tube of 25	TL2575-15IN	TL2575-15IN
		TO-263 – KTT	Reel of 500	TL2575-15IKTTR	TL2575-15I
		TO-220 – KV	Tube of 50	TL2575-15IKV	TL2575-15I
	ADJ	PDIP – N	Tube of 25	TL2575-ADJIN	TL2575-ADJIN
		TO-263 – KTT	Reel of 500	TL2575-ADJIKTTR	TL2575ADJI
		TO-220 – KV	Tube of 50	TL2575-ADJIKV	TL2575ADJI

(1) For the most current package and ordering information, see the Package Option Addendum at the end of this document, or see the TI web site at www.ti.com.
(2) Package drawings, standard packing quantities, thermal data, symbolization, and PCB design guidelines are available at www.ti.com/sc/package.

ORDERING INFORMATION(1)
TL2575HV ($V_{IN(MAX)}$ = 60 V)

T_J	V_O (NOM)	PACKAGE(2)		ORDERABLE PART NUMBER	TOP-SIDE MARKING
–40°C to 125°C	3.3 V	PDIP – N	Tube of 25	TL2575HV-33IN	TL2575HV-33IN
		TO-263 – KTT	Reel of 500	TL2575HV-33IKTTR	2BHV-33I
		TO-220 – KV	Tube of 50	TL2575HV-33IKV	TL2575HV-33I
	5 V	PDIP – N	Tube of 25	TL2575HV-05IN	TL2575HV-05IN
		TO-263 – KTT	Reel of 500	TL2575HV-05IKTTR	2BHV-05I
		TO-220 – KV	Tube of 50	TL2575HV-05IKV	TL2575HV-05I
	12 V	PDIP – N	Tube of 25	TL2575HV-12IN	TL2575HV-12IN
		TO-263 – KTT	Reel of 500	TL2575HV-12IKTTR	2BHV-12I
		TO-220 – KV	Tube of 50	TL2575HV-12IKV	TL2575HV-12I
	15 V	PDIP – N	Tube of 25	TL2575HV-15IN	TL2575HV-15IN
		TO-263 – KTT	Reel of 500	TL2575HV-15IKTTR	2BHV-15I
		TO-220 – KV	Tube of 50	TL2575HV-15IKV	TL2575HV-15I
	ADJ	PDIP – N	Tube of 25	TL2575HV-ADJIN	TL2575HV-ADJIN
		TO-263 – KTT	Reel of 500	TL2575HV-ADJIKTTR	2BHV-ADJI
		TO-220 – KV	Tube of 50	TL2575HV-ADJIKV	TL2575HVADJI

(1) For the most current package and ordering information, see the Package Option Addendum at the end of this document, or see the TI web site at www.ti.com.
(2) Package drawings, standard packing quantities, thermal data, symbolization, and PCB design guidelines are available at www.ti.com/sc/package.

FUNCTIONAL BLOCK DIAGRAM

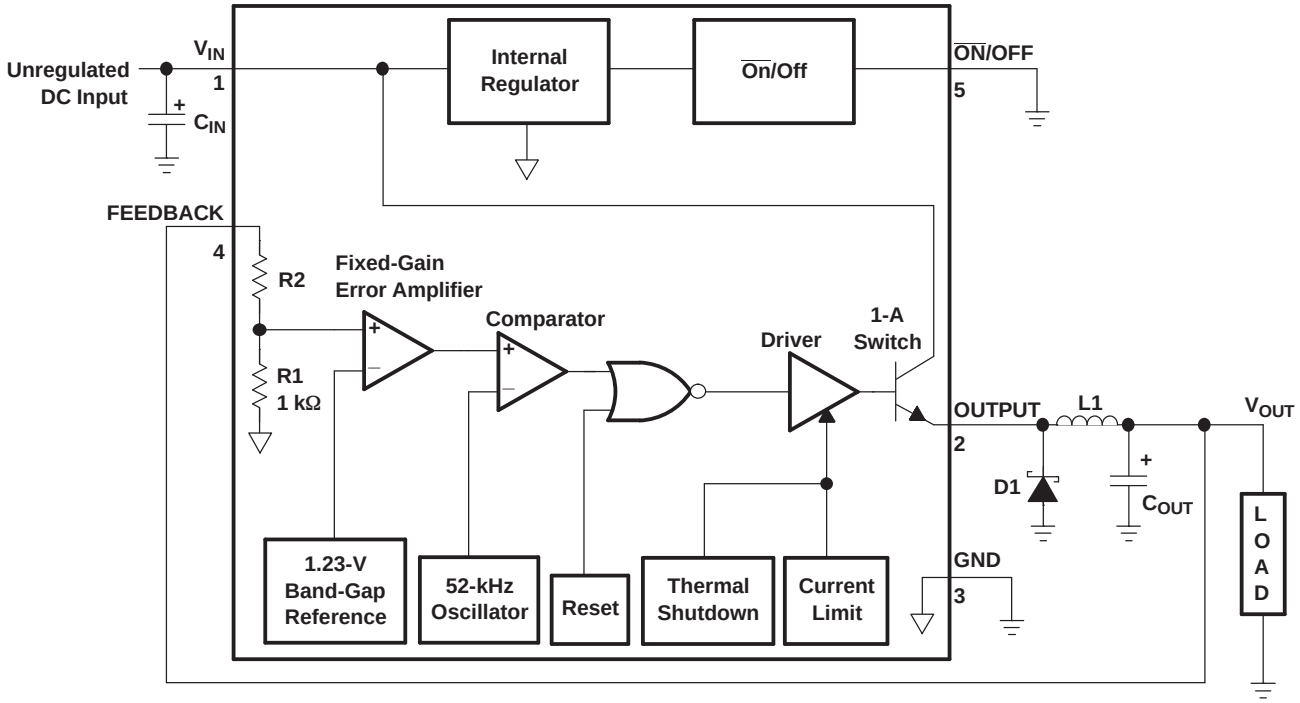

3.3 V: R2 = 1.7 kΩ
5 V: R2 = 3.1 kΩ
12 V: R2 = 8.84 kΩ
15 V: R2 = 11.3 kΩ
ADJ: R1 = Open, R2 = 0 Ω

A. Pin numbers are for the KTT (TO-263) package.

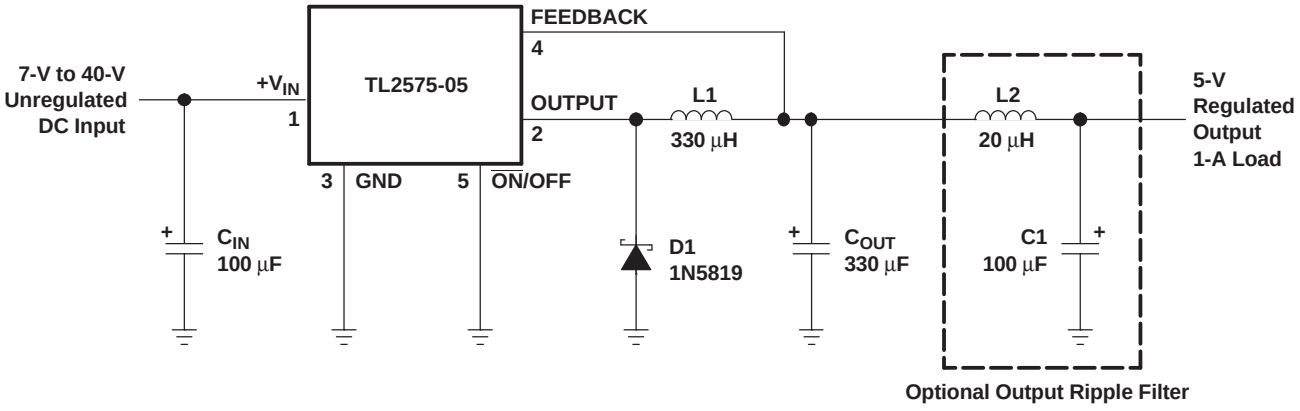

A. Pin numbers are for the KTT (TO-263) package.

Figure 1. Typical Application Circuit (Fixed Version)

Absolute Maximum Ratings(1)

over operating free-air temperature range (unless otherwise noted)

			MIN	MAX	UNIT
V_{IN}	Supply voltage	TL2575HV		60	V
		TL2575		42	
	$\overline{ON}$/OFF input voltage range		–0.3	V_{IN}	V
	Output voltage to GND (steady state)			–1	V
T_J	Maximum junction temperature			150	°C
T_{stg}	Storage temperature range		–65	150	°C

(1) Stresses beyond those listed under *absolute maximum ratings* may cause permanent damage to the device. These are stress ratings only, and functional operation of the device at these or any other conditions beyond those indicated under *recommended operating conditions* is not implied. Exposure to absolute-maximum-rated conditions for extended periods may affect device reliability.

Package Thermal Data(1)

PACKAGE	BOARD	θ_{JA}	θ_{JC}	θ_{JP}(2)
PDIP (N)	High K, JESD 51-7	67°C/W	57°C/W	
TO-263 (KTT)	High K, JESD 51-5	26.5°C/W	31.8°C/W	0.38°C/W
TO-220 (KV)	High K, JESD 51-5	26.5°C/W	31.8°C/W	0.38°C/W

(1) Maximum power dissipation is a function of $T_J(max)$, θ_{JA}, and T_A. The maximum allowable power dissipation at any allowable ambient temperature is $P_D = (T_J(max) – T_A)/\theta_{JA}$. Operating at the absolute maximum T_J of 150°C can affect reliability.
(2) For packages with exposed thermal pads, such as QFN, PowerPAD™, or PowerFLEX™, θ_{JP} is defined as the thermal resistance between the die junction and the bottom of the exposed pad.

Recommended Operating Conditions

			MIN	MAX	UNIT
V_{IN}	Supply voltage	TL2575HV	4.75	60	V
		TL2575	4.75	40	
T_J	Operating virtual junction temperature		–40	125	°C

TL2575 Electrical Characteristics

I_{LOAD} = 200 mA, V_{IN} = 12 V for 3.3-V, 5-V, and adjustable versions, V_{IN} = 25 V for 12-V version, V_{IN} = 30 V for 15-V version (unless otherwise noted) (see Figure 2)

PARAMETER			TEST CONDITIONS	T_J	TL2575			UNIT
					MIN	TYP	MAX	
V_{OUT}	Output voltage	TL2575-33	V_{IN} = 12 V, I_{LOAD} = 0.2 A	25°C	3.234	3.3	3.366	V
			4.75 V ≤ V_{IN} ≤ 40 V, 0.2 A ≤ I_{LOAD} ≤ 1 A	25°C	3.168	3.3	3.432	
				Full range	3.135		3.465	
		TL2575-05	V_{IN} = 12 V, I_{LOAD} = 0.2 A	25°C	4.9	5	5.1	
			8 V ≤ V_{IN} ≤ 40 V, 0.2 A ≤ I_{LOAD} ≤ 1 A	25°C	4.8	5	5.2	
				Full range	4.75		5.25	
		TL2575-12	V_{IN} = 25 V, I_{LOAD} = 0.2 A	25°C	11.76	12	12.24	
			15 V ≤ V_{IN} ≤ 40 V, 0.2 A ≤ I_{LOAD} ≤ 1 A	25°C	11.52	12	12.48	
				Full range	11.4		12.6	
		TL2575-15	V_{IN} = 30 V, I_{LOAD} = 0.2 A	25°C	14.7	15	15.3	
			18 V ≤ V_{IN} ≤ 40 V, 0.2 A ≤ I_{LOAD} ≤ 1 A	25°C	14.4	15	15.6	
				Full range	14.25	15	15.75	
	Feedback voltage	TL2575-ADJ	V_{IN} = 12 V, V_{OUT} = 5 V, I_{LOAD} = 0.2 A	25°C	1.217	1.23	1.243	V
			8 V ≤ V_{IN} ≤ 40 V, V_{OUT} = 5 V, 0.2 A ≤ I_{LOAD} ≤ 1 A	25°C	1.193	1.23	1.267	
				Full range	1.18		1.28	
η	Efficiency	TL2575-33	V_{IN} = 12 V, I_{LOAD} = 1 A	25°C		75		%
		TL2575-05	V_{IN} = 12 V, I_{LOAD} = 1 A			77		
		TL2575-12	V_{IN} = 15 V, I_{LOAD} = 1 A			88		
		TL2575-15	V_{IN} = 18 V, I_{LOAD} = 1 A			88		
		TL2575-ADJ	V_{IN} = 12 V, V_{OUT} = 5 V, I_{LOAD} = 1 A			77		
I_{IB}	Feedback bias current		V_{OUT} = 5 V (ADJ version only)	25°C		50	100	nA
				Full range			500	
f_o	Oscillator frequency(1)			25°C	47	52	58	kHz
				Full range	42		63	
V_{SAT}	Saturation voltage		I_{OUT} = 1 A(2)	25°C		0.9	1.2	V
				Full range			1.4	
	Maximum duty cycle(3)			25°C	93	98		%
I_{CL}	Switch peak current(1)(2)			25°C	1.7	2.8	3.6	A
				Full range	1.3		4	
I_L	Output leakage current		V_{IN} = 40(4), Output = 0 V	25°C			2	mA
			V_{IN} = 40(4), Output = –1 V			7.5	30	
I_Q	Quiescent current(4)			25°C		5	10	mA
I_{STBY}	Standby quiescent current		OFF ($\overline{ON}$/OFF = 5 V)	25°C		50	200	µA

(1) In the event of an output short or an overload condition, self-protection features lower the oscillator frequency to ~18 kHz and the minimum duty cycle from 5% to ~2%. The resulting output voltage drops to ~40% of its nominal value, causing the average power dissipated by the IC to lower.
(2) Output is not connected to diode, inductor, or capacitor. Output is sourcing current.
(3) FEEDBACK is disconnected from output and connected to 0 V.
(4) To force the output transistor off, FEEDBACK is disconnected from output and connected to 12 V for the adjustable, 3.3-V, and 5-V versions and to 25 V for the 12-V and 15-V versions.

TL2575 Electrical Characteristics (continued)

I_{LOAD} = 200 mA, V_{IN} = 12 V for 3.3-V, 5-V, and adjustable versions, V_{IN} = 25 V for 12-V version, V_{IN} = 30 V for 15-V version (unless otherwise noted) (see Figure 2)

PARAMETER		TEST CONDITIONS	T_J	TL2575			UNIT
				MIN	TYP	MAX	
V_{IH}	$\overline{ON}$/OFF high-level logic input voltage	OFF (V_{OUT} = 0 V)	25°C	2.2	1.4		V
			Full range	2.4			
V_{IL}	$\overline{ON}$/OFF low-level logic input voltage	ON (V_{OUT} = nominal voltage)	25°C		1.2	1	V
			Full range			0.8	
I_{IH}	$\overline{ON}$/OFF high-level input current	OFF ($\overline{ON}$/OFF = 5 V)	25°C		12	30	µA
I_{IL}	$\overline{ON}$/OFF low-level input current	ON ($\overline{ON}$/OFF = 0 V)	25°C		0	10	µA

TL2575HV Electrical Characteristics

I_{LOAD} = 200 mA, V_{IN} = 12 V for 3.3-V, 5-V, and adjustable versions, V_{IN} = 25 V for 12-V version, V_{IN} = 30 V for 15-V version (unless otherwise noted) (see Figure 2)

PARAMETER			TEST CONDITIONS	T_J	TL2575HV			UNIT
					MIN	TYP	MAX	
V_{OUT}	Output voltage	TL2575HV-33	V_{IN} = 12 V, I_{LOAD} = 0.2 A	25°C	3.234	3.3	3.366	V
			4.75 V ≤ V_{IN} ≤ 60 V, 0.2 A ≤ I_{LOAD} ≤ 1 A	25°C	3.168	3.3	3.450	
				Full range	3.135		3.482	
		TL2575HV-05	V_{IN} = 12 V, I_{LOAD} = 0.2 A	25°C	4.9	5	5.1	
			8 V ≤ V_{IN} ≤ 60 V, 0.2 A ≤ I_{LOAD} ≤ 1 A	25°C	4.8	5	5.225	
				Full range	4.75		5.275	
		TL2575HV-12	V_{IN} = 25 V, I_{LOAD} = 0.2 A	25°C	11.76	12	12.24	
			15 V ≤ V_{IN} ≤ 60 V, 0.2 A ≤ I_{LOAD} ≤ 1 A	25°C	11.52	12	12.54	
				Full range	11.4		12.66	
		TL2575HV-15	V_{IN} = 30 V, I_{LOAD} = 0.2 A	25°C	14.7	15	15.3	
			18 V ≤ V_{IN} ≤ 60 V, 0.2 A ≤ I_{LOAD} ≤ 1 A	25°C	14.4	15	15.68	
				Full range	14.25	15	15.83	
	Feedback voltage	TL2575HV-ADJ	V_{IN} = 12 V, V_{OUT} = 5 V, I_{LOAD} = 0.2 A	25°C	1.217	1.23	1.243	V
			8 V ≤ V_{IN} ≤ 60 V, V_{OUT} = 5 V, 0.2 A ≤ I_{LOAD} ≤ 1 A	25°C	1.193	1.23	1.273	
				Full range	1.180		1.286	
η	Efficiency	TL2575HV-33	V_{IN} = 12 V, I_{LOAD} = 1 A	25°C		75		%
		TL2575HV-05	V_{IN} = 12 V, I_{LOAD} = 1 A			77		
		TL2575HV-12	V_{IN} = 15 V, I_{LOAD} = 1 A			88		
		TL2575HV-15	V_{IN} = 18 V, I_{LOAD} = 1 A			88		
		TL2575HV-ADJ	V_{IN} = 12 V, V_{OUT} = 5 V, I_{LOAD} = 1 A			77		
I_{IB}	Feedback bias current		V_{OUT} = 5 V (ADJ version only)	25°C		50	100	nA
				Full range			500	
f_o	Oscillator frequency(1)			25°C	47	52	58	kHz
				Full range	42		63	
V_{SAT}	Saturation voltage		I_{OUT} = 1 A(2)	25°C		0.9	1.2	V
				Full range			1.4	
	Maximum duty cycle(3)			25°C	93	98		%
I_{CL}	Switch peak current(1)(2)			25°C	1.7	2.8	3.6	A
				Full range	1.3		4	
I_L	Output leakage current		V_{IN} = 60(4), Output = 0 V	25°C			2	mA
			V_{IN} = 60(4), Output = –1 V			7.5	30	
I_Q	Quiescent current(4)			25°C		5	10	mA
I_{STBY}	Standby quiescent current		OFF ($\overline{ON}$/OFF = 5 V)	25°C		50	200	μA

(1) In the event of an output short or an overload condition, self-protection features lower the oscillator frequency to ~18 kHz and the minimum duty cycle from 5% to ~2%. The resulting output voltage drops to ~40% of its nominal value, causing the average power dissipated by the IC to lower.
(2) Output is not connected to diode, inductor, or capacitor. Output is sourcing current.
(3) FEEDBACK is disconnected from output and connected to 0 V.
(4) To force the output transistor off, FEEDBACK is disconnected from output and connected to 12 V for the adjustable, 3.3-V, and 5-V versions and to 25 V for the 12-V and 15-V versions.

TL2575HV Electrical Characteristics (continued)

I_{LOAD} = 200 mA, V_{IN} = 12 V for 3.3-V, 5-V, and adjustable versions, V_{IN} = 25 V for 12-V version, V_{IN} = 30 V for 15-V version (unless otherwise noted) (see Figure 2)

PARAMETER		TEST CONDITIONS	T_J	TL2575HV			UNIT
				MIN	TYP	MAX	
V_{IH}	$\overline{ON}$/OFF high-level logic input voltage	OFF (V_{OUT} = 0 V)	25°C	2.2	1.4		V
			Full range	2.4			
V_{IL}	$\overline{ON}$/OFF low-level logic input voltage	ON (V_{OUT} = nominal voltage)	25°C		1.2	1	V
			Full range			0.8	
I_{IH}	$\overline{ON}$/OFF high-level input current	OFF ($\overline{ON}$/OFF = 5 V)	25°C		12	30	µA
I_{IL}	$\overline{ON}$/OFF low-level input current	ON ($\overline{ON}$/OFF = 0 V)			0	10	µA

TEST CIRCUITS

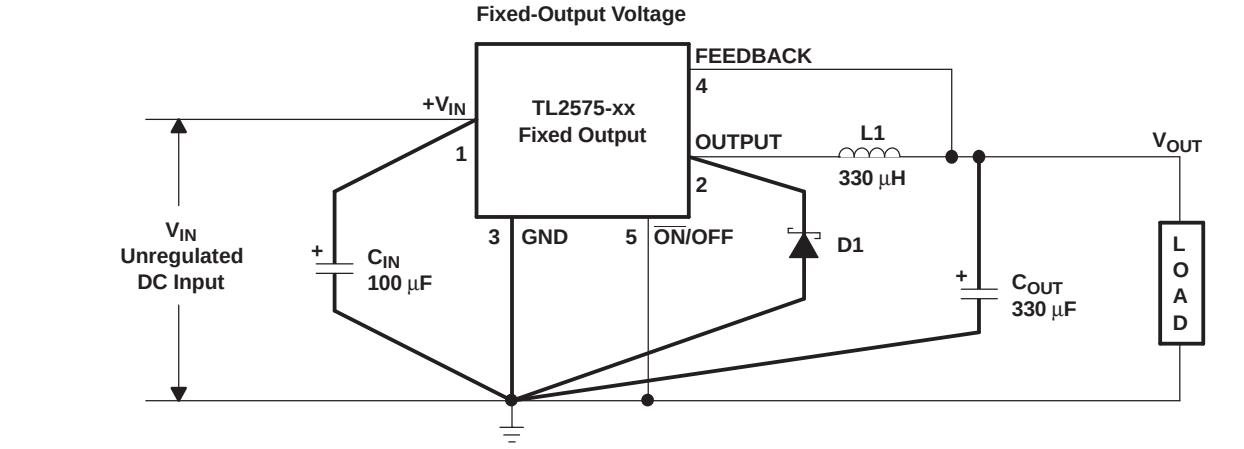

C_{IN} = 100 µF, Aluminum Electrolytic
C_{OUT} = 330 µF, Aluminum Electrolytic
D1 = Schottky
L1 = 330 µH (for 5-V V_{IN} with 3.3-V V_{OUT}, use 100 µH)

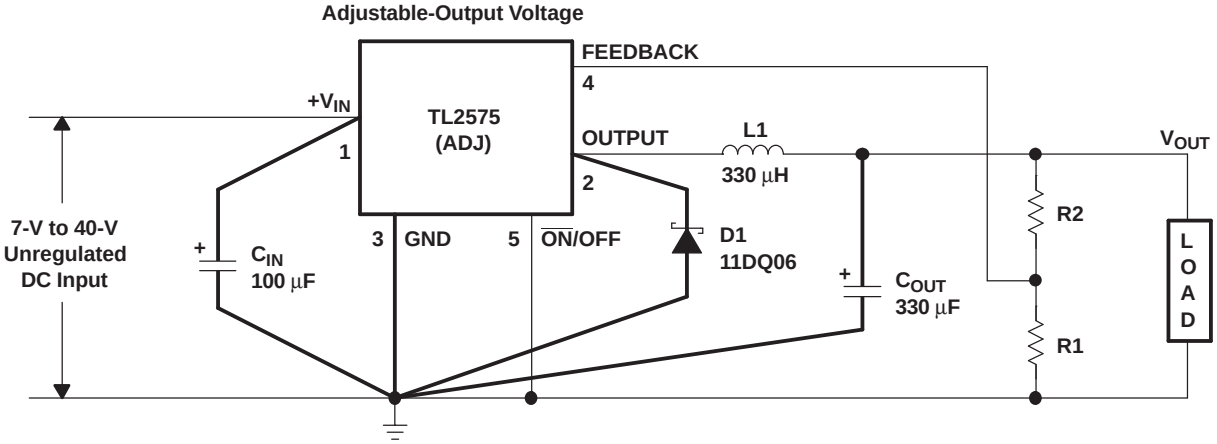

$V_{OUT} = V_{REF}(1 + R2/R1) = 5$ V

V_{REF} = 1.23 V
R1 = 2 kΩ
R2 = 6.12 kΩ

A. Pin numbers are for the KTT (TO-263) package.

Figure 2. Test Circuits and Layout Guidelines

TYPICAL CHARACTERISTICS

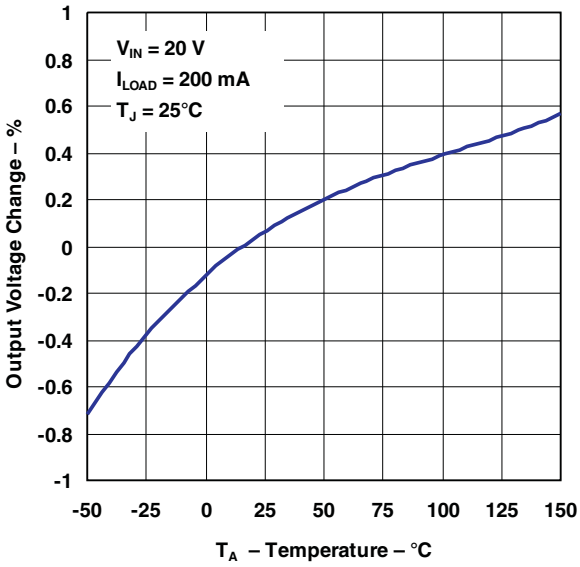

Figure 3. Normalized Output Voltage

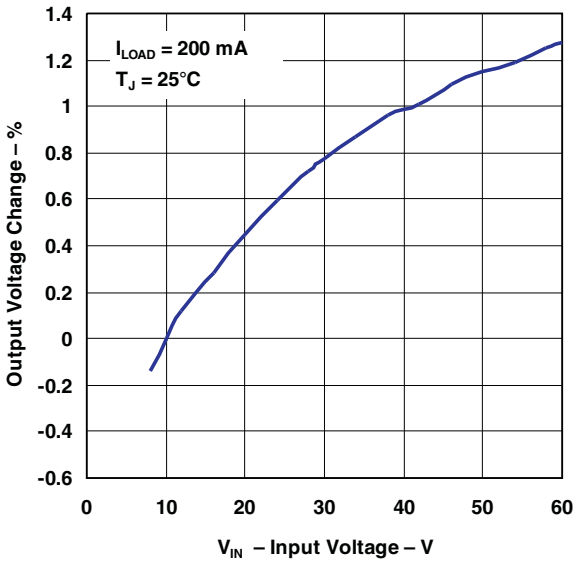

Figure 4. Line Regulation

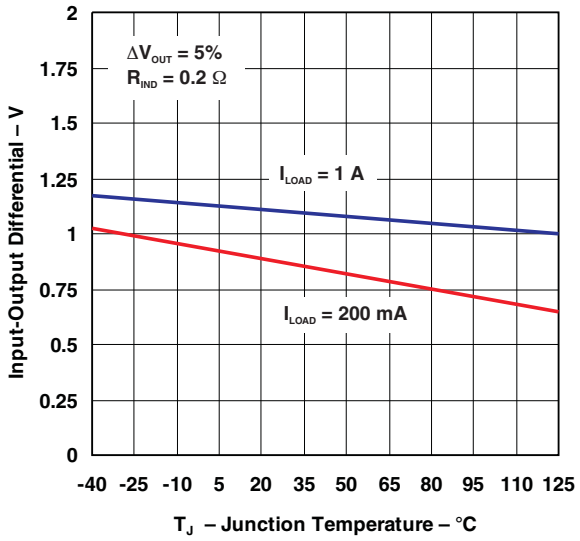

Figure 5. Dropout Voltage

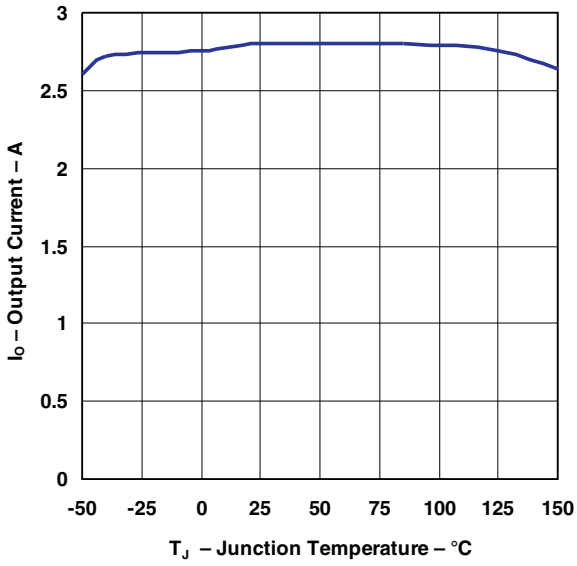

Figure 6. Current Limit

TYPICAL CHARACTERISTICS (continued)

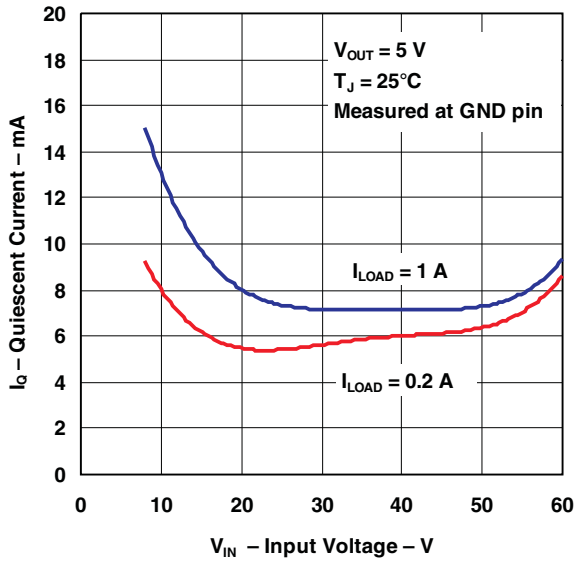

Figure 7. Quiescent Current

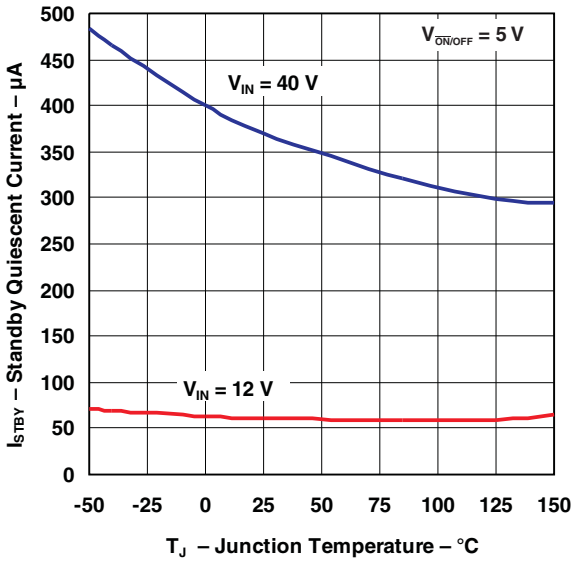

Figure 8. Standby Quiescent Current

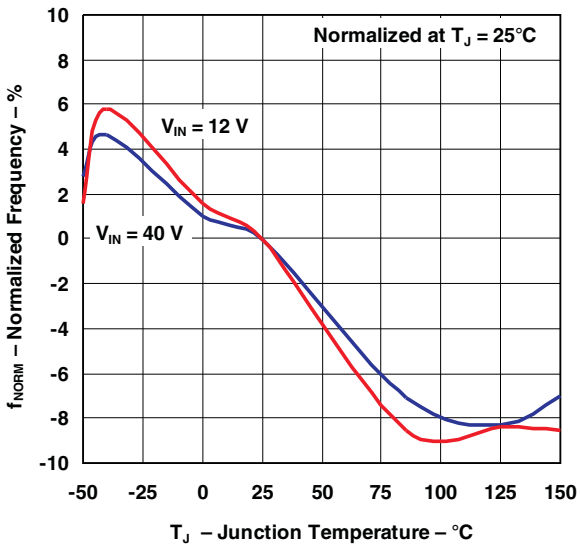

Figure 9. Oscillator Frequency

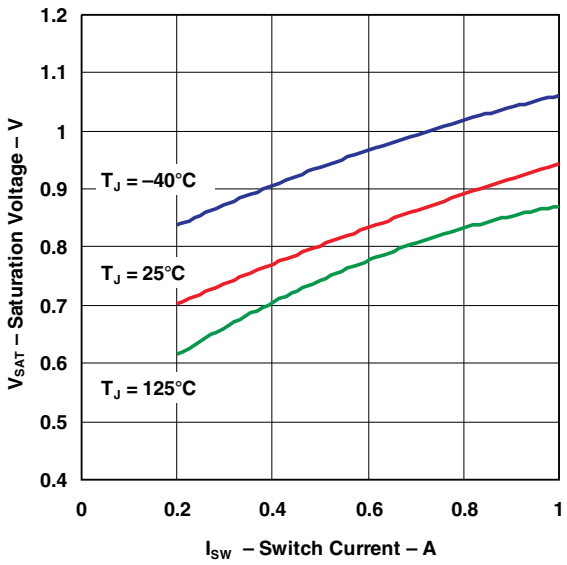

Figure 10. Switch Saturation Voltage

TYPICAL CHARACTERISTICS (continued)

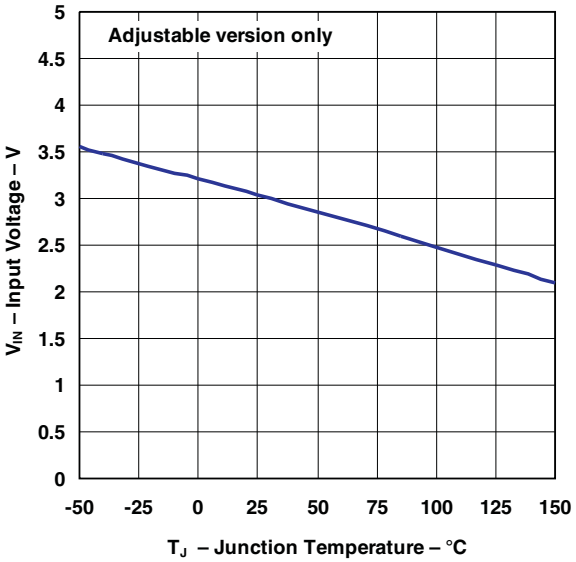

Figure 11. Minimum Operating Voltage

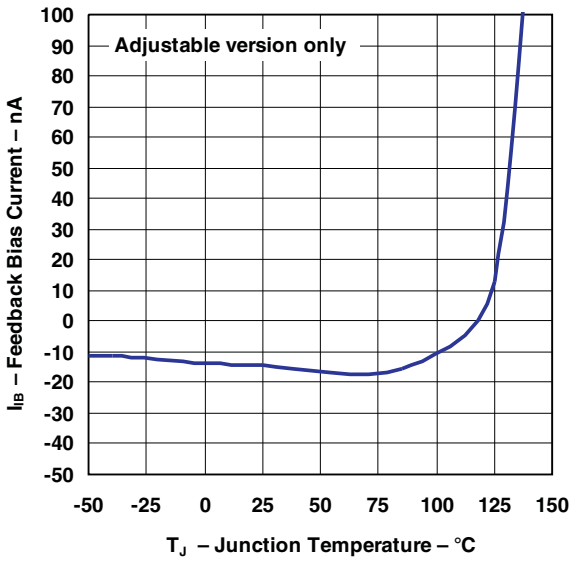

Figure 12. FEEDBACK Current

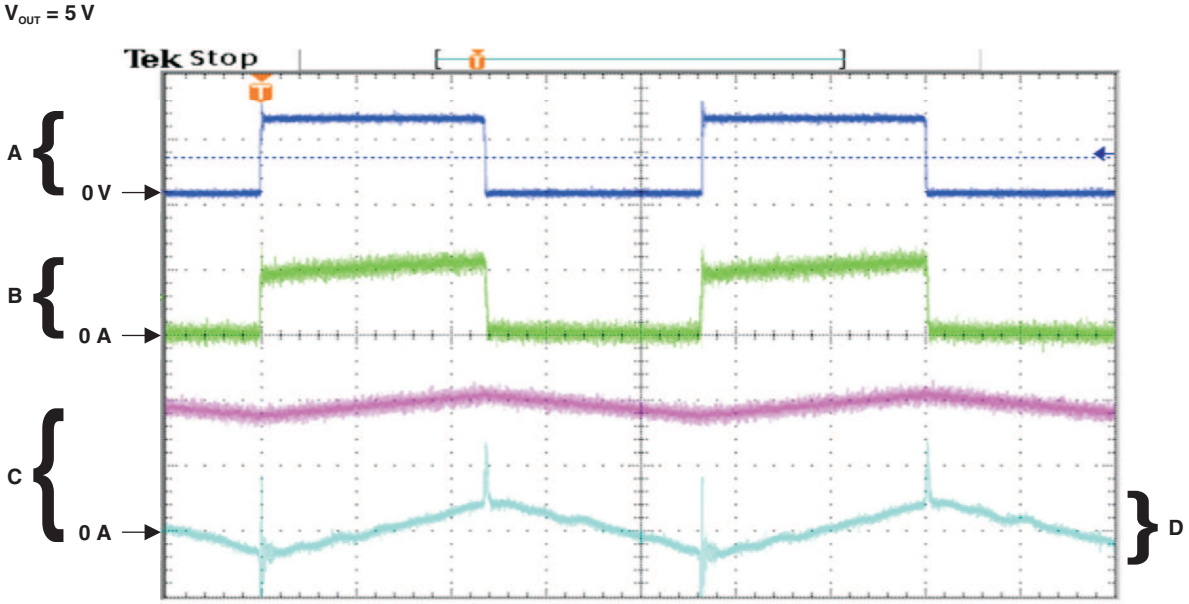

A. Output pin voltage, 10 V/Div
B. Output pin current, 1 A/Div
C. Inductor current, 0.5 A/Div
D. Ouput ripple voltage, 20 mV/Div

Figure 13. Switching Waveforms

TYPICAL CHARACTERISTICS (continued)

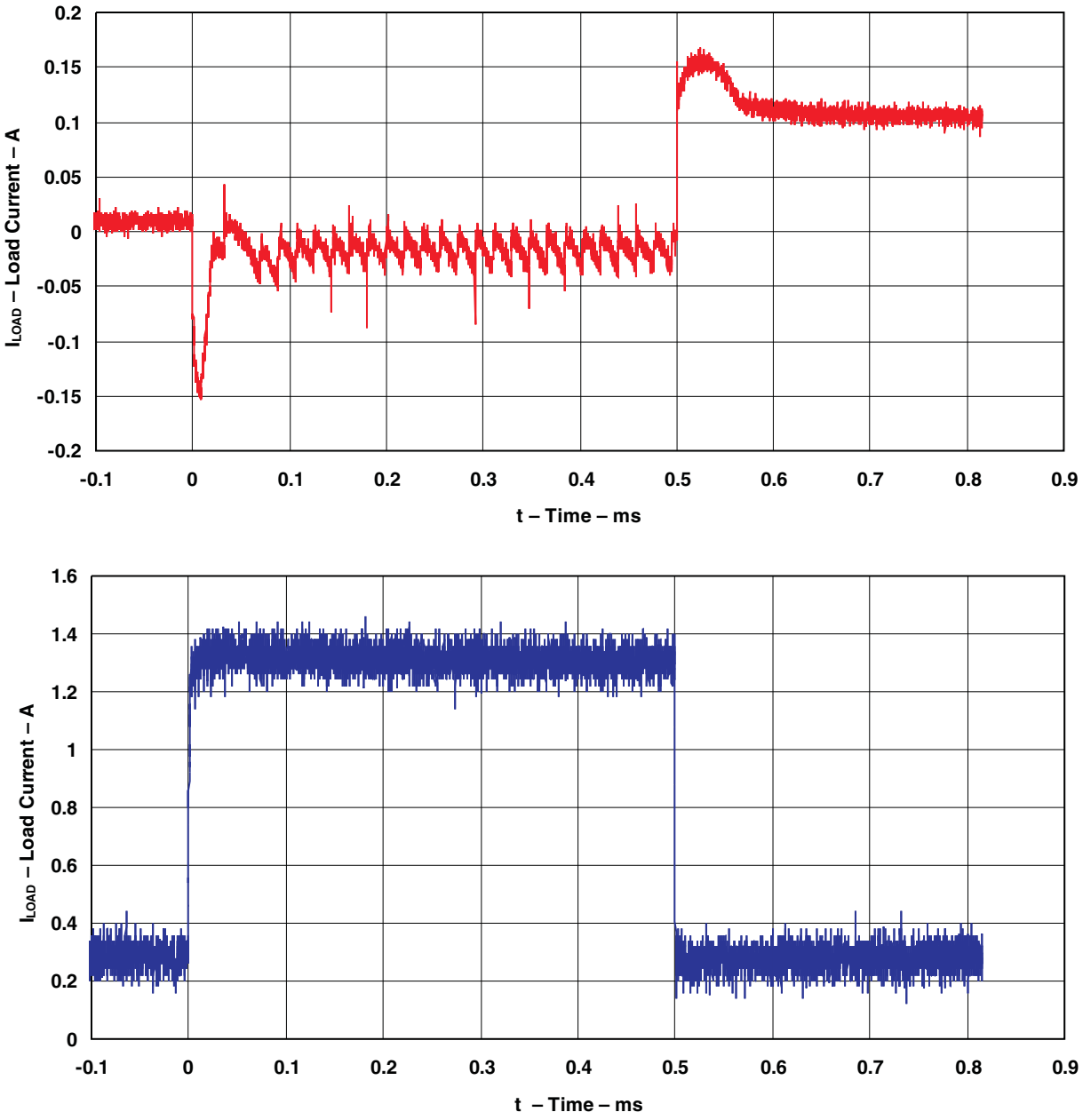

Figure 14. Load Transient Response

APPLICATION INFORMATION

Input Capacitor (C_{IN})

For stability concerns, an input bypass capacitor (electrolytic, $C_{IN} \geq 47$ µF) needs to be located as close as possible to the regulator. For operating temperatures below –25°C, C_{IN} may need to be larger in value. In addition, since most electrolytic capacitors have decreasing capacitances and increasing ESR as temperature drops, adding a ceramic or solid tantalum capacitor in parallel increases the stability in cold temperatures.

To extend the capacitor operating lifetime, the capacitor RMS ripple current rating should be:

$I_{C,RMS} > 1.2(t_{on}/T)I_{LOAD}$

where

$t_{on}/T = V_{OUT}/V_{IN}$ {buck regulator} and

$t_{on}/T = |V_{OUT}|/(|V_{OUT}| + V_{IN})$ {buck-boost regulator}

Output Capacitor (C_{OUT})

For both loop stability and filtering of ripple voltage, an output capacitor also is required, again in close proximity to the regulator. For best performance, low-ESR aluminum electrolytics are recommended, although standard aluminum electrolytics may be adequate for some applications. Based on the following equation:

Output ripple voltage = (ESR of C_{OUT}) × (inductor ripple current)

Output ripple of 50 mV to 150 mV typically can be achieved with capacitor values of 220 µF to 680 µF. Larger C_{OUT} can reduce the ripple 20 mV to 50 mV peak to peak. To improve further on output ripple, paralleling of standard electrolytic capacitors may be used. Alternatively, higher-grade capacitors such as high frequency, low inductance, or low ESR can be used.

The following should be taken into account when selecting C_{OUT}:

- At cold temperatures, the ESR of the electrolytic capacitors can rise dramatically (typically 3× nominal value at –25°C). Because solid tantalum capacitors have significantly better ESR specifications at cold temperatures, they should be used at operating temperature lower than –25°C. As an alternative, tantalums also can be paralleled to aluminum electrolytics and should contribute 10% to 20% to the total capacitance.
- Low ESR for C_{OUT} is desirable for low output ripple. However, the ESR should be greater than 0.05 Ω to avoid the possibility of regulator instability. Hence, a sole tantalum capacitor used for C_{OUT} is most susceptible to this occurrence.
- The capacitor's ripple current rating of 52 kHz should be at least 50% higher than the peak-to-peak inductor ripple current.

Catch Diode

As with other external components, the catch diode should be placed close to the output to minimize unwanted noise. Schottky diodes have fast switching speeds and low forward voltage drops and, thus, offer the best performance, especially for switching regulators with low output voltages ($V_{OUT} < 5$ V). If a high-efficiency, fast-recovery, or ultra-fast-recovery diode is used in place of a Schottky, it should have a soft recovery (versus abrupt turn-off characteristics) to avoid the chance of causing instability and EMI. Standard 50-/60-Hz diodes, such as the 1N4001 or 1N5400 series, are not suitable.

APPLICATION INFORMATION (continued)

Inductor

Proper inductor selection is key to the performance-switching power-supply designs. One important factor to consider is whether the regulator is used in continuous mode (inductor current flows continuously and never drops to zero) or in discontinuous mode (inductor current goes to zero during the normal switching cycle). Each mode has distinctively different operating characteristics and, therefore, can affect the regulator performance and requirements. In many applications, the continuous mode is the preferred mode of operation, since it offers greater output power with lower peak currents, and also can result in lower output ripple voltage. The advantages of continuous mode of operation come at the expense of a larger inductor required to keep inductor current continuous, especially at low output currents and/or high input voltages.

The TL2575 and TL2575HV can operate in either continuous or discontinuous mode. With heavy load currents, the inductor current flows continuously and the regulator operates in continuous mode. Under light load, the inductor fully discharges and the regulator is forced into the discontinuous mode of operation. For light loads (approximately 200 mA or less), this discontinuous mode of operation is perfectly acceptable and may be desirable solely to keep the inductor value and size small. Any buck regulator eventually operates in discontinuous mode when the load current is light enough.

The type of inductor chosen can have advantages and disadvantages. If high performance/quality is a concern, then more-expensive toroid core inductors are the best choice, as the magnetic flux is contained completely within the core, resulting in less EMI and noise in nearby sensitive circuits. Inexpensive bobbin core inductors, however, generate more EMI as the open core does not confine the flux within the core. Multiple switching regulators located in proximity to each other are particularly susceptible to mutual coupling of magnetic fluxes from each other's open cores. In these situations, closed magnetic structures (such as a toroid, pot core, or E-core) are more appropriate.

Regardless of the type and value of inductor used, the inductor never should carry more than its rated current. Doing so may cause the inductor to saturate, in which case the inductance quickly drops, and the inductor looks like a low-value resistor (from the dc resistance of the windings). As a result, switching current rises dramatically (until limited by the current-by-current limiting feature of the TL2575 and TL2575HV) and can result in overheating of the inductor and the IC itself. Note that different types of inductors have different saturation characteristics.

Output Voltage Ripple and Transients

As with any switching power supply, the output of the TL2575 and TL2575HV have a sawtooth ripple voltage at the switching frequency. Typically about 1% of the output voltage, this ripple is due mainly to the inductor sawtooth ripple current and the ESR of the output capacitor (see note on C_{OUT}). Furthermore, the output also may contain small voltage spikes at the peaks of the sawtooth waveform. This is due to the fast switching of the output switch and the parasitic inductance of C_{OUT}. These voltage spikes can be minimized through the use of low-inductance capacitors.

There are several ways to reduce the output ripple voltage: a larger inductor, a larger C_{OUT}, or both. Another method is to use a small LC filter (20 μH and 100 μF) at the output. This filter can reduce the output ripple voltage by a factor of 10 (see Figure 2).

Feedback Connection

For fixed-voltage options, FEEDBACK must be wired to V_{OUT}. For the adjustable version, FEEDBACK must be connected between the two programming resistors. Again, both of these resistors should be in close proximity to the regulator, and each should be less than 100 kΩ to minimize noise pickup.

$\overline{\text{ON}}$/OFF Input

$\overline{\text{ON}}$/OFF should be grounded or be a low-level TTL voltage (typically <1.6 V) for normal operation. To shut down the TL2575 or TL2575HV and put it in standby mode, a high-level TTL or CMOS voltage should be supplied to this pin. $\overline{\text{ON}}$/OFF should not be left open and safely can be pulled up to V_{IN} with or without a pullup resistor.

APPLICATION INFORMATION (continued)

Grounding

The power and ground connections of the TL2575 and TL2575HV must be low impedance to help maintain output stability. For the 5-pin packages, both pin 3 and tab are ground, and either connection can be used as they are both part of the same lead frame. With the 16-pin package, all the ground pins (including signal and power grounds) should be soldered directly to wide PCB copper traces to ensure low-inductance connections and good thermal dissipation.

Layout Guidelines

With any switching regulator, circuit layout plays an important role in circuit performance. Wiring and parasitic inductances, as well as stray capacitances, are subjected to rapidly switching currents, which can result in unwanted voltage transients. To minimize inductance and ground loops, the length of the leads indicated by heavy lines should be minimized. Optimal results can be achieved by single-point grounding (see Figure 2) or by ground-plane construction. For the same reasons, the two programming resistors used in the adjustable version should be located as close as possible to the regulator to keep the sensitive feedback wiring short.

BUCK REGULATOR DESIGN PROCEDURE

PROCEDURE (Fixed Output)	EXAMPLE (Fixed Output)
Known: V_{OUT} = 3.3 V, 5 V, 12 V, or 15 V $V_{IN(Max)}$ = Maximum input voltage $I_{LOAD(Max)}$ = Maximum load current	**Known:** V_{OUT} = 5 V $V_{IN(Max)}$ = 20 V $I_{LOAD(Max)}$ = 1 A
1. Inductor Selection (L1) **A.** From Figure 15 through Figure 18, select the appropriate inductor code based on the intersection of $V_{IN(Max)}$ and $I_{LOAD(Max)}$. **B.** From Table 2, choose the appropriate inductor based on the inductor code. Parts from three well-known inductor manufacturers are given. The inductor chosen should be rated for operation at 52-kHz and have a current rating of at least 1.15 × $I_{LOAD(Max)}$ to allow for the ripple current. The actual peak current in L1 (in normal operation) can be calculated as follows: $I_{L1(pk)} = I_{LOAD(Max)} + (V_{IN} - V_{OUT}) \times t_{on}/2L1$ Where $t_{on} = V_{OUT}/V_{IN} \times (1/f_{osc})$	**1. Inductor Selection (L1)** **A.** From Figure 16 (TL2575-05), the intersection of 20-V line and 1-A line gives an inductor code of L330. **B.** L330 → L1 = 330 µH Choose from: 34042 (Schott) PE-52627 (Pulse Engineering) RL1952 (Renco)
2. Output Capacitor Selection (C_{OUT}) **A.** The TL2575 control loop has a two-pole two-zero frequency response. The dominant pole-zero pair is established by C_{OUT} and L1. To meet stability requirements while maintaining an acceptable output ripple voltage ($V_{ripple} \approx 0.01 \times V_{OUT}$), the recommended range for a standard aluminum electrolytic C_{OUT} is between 100 µF and 470 µF. **B.** C_{OUT} should have a voltage rating of at least 1.5 × V_{OUT}. But if a low output ripple voltage is desired, choose capacitors with a higher-voltage ratings than the minimum required, due to their typically lower ESRs.	**2. Output Capacitor Selection (C_{OUT})** **A.** C_{OUT} = 100-µF to 470-µF, standard aluminum electrolytic **B.** Although a C_{OUT} rated at 8 V is sufficient for V_{OUT} = 5 V, a higher-voltage capacitor is chosen for its typically lower ESR (and hence lower output ripple voltage) → Capacitor voltage rating = 20 V.
3. Catch Diode Selection (D1) (see Table 1) **A.** In normal operation, the catch diode requires a current rating of at least 1.2 × $I_{LOAD(Max)}$. For the most robust design, D1 should be rated to handle a current equal to the TL2575 maximum switch peak current; this represents the worst-case scenario of a continuous short at V_{OUT}. **B.** The diode requires a reverse voltage rating of at least 1.25 × $V_{IN(Max)}$.	**3. Catch Diode Selection (D1) (see Table 1)** **A.** Pick a diode with 3-A rating. **B.** Pick 30-V rated Schottky diode (1N5821, MBR330, 31QD03, or SR303) or 100-V rated Fast Recovery diode (31DF1, MURD310, or HER302).
4. Input Capacitor (C_{IN}) An aluminum electrolytic or tantalum capacitor is needed for input bypassing. Locate C_{IN} as close to the V_{IN} and GND pins as possible.	**4. Input Capacitor (C_{IN})** C_{IN} = 100 µF, 25 V, aluminum electrolytic

PROCEDURE (Adjustable Output)	EXAMPLE (Adjustable Output)
Known: $V_{OUT(Nom)}$ $V_{IN(Max)}$ = Maximum input voltage $I_{LOAD(Max)}$ = Maximum load current	**Known:** V_{OUT} = 10 V $V_{IN(Max)}$ = 25 V $I_{LOAD(Max)}$ = 1 A
1. Programming Output Voltage (Selecting R1 and R2) Referring to Fig. 2, V_{OUT} is defined by: $V_{OUT} = V_{REF}\left(1 + \frac{R2}{R1}\right)$ where V_{REF} = 1.23 V Choose a value for R1 between 1 kΩ and 5 kΩ (use 1% metal-film resistors for best temperature coefficient and stability over time). $R2 = R1\left(\frac{V_{OUT}}{V_{REF}} - 1\right)$	**1. Programming Output Voltage (Selecting R1 and R2)** Select R1 = 1 kΩ R2 = 1 (10/1.23 – 1) = 7.13 kΩ Select R2 = 7.15 kΩ (closest 1% value)
2. Inductor Selection (L1) **A.** Calculate the "set" volts-second (E•T) across L1: $E•T = (V_{IN} - V_{OUT}) \times t_{on}$ $E•T = (V_{IN} - V_{OUT}) \times (V_{OUT}/V_{IN}) \times \{1000/f_{osc}(\text{in kHz})\}$ [V•µs] **NOTE:** Along with I_{LOAD}, the "set" volts-second (E•T) constant establishes the minimum energy storage requirement for the inductor. **B.** Using Figure 19, select the appropriate inductor code based on the intersection of E•T value and $I_{LOAD(Max)}$. **C.** From Table 2, choose the appropriate inductor based on the inductor code. Parts from three well-known inductor manufacturers are given. The inductor chosen should be rated for operation at 52-kHz and have a current rating of at least 1.15 x $I_{LOAD(Max)}$ to allow for the ripple current. The actual peak current in L1 (in normal operation) can be calculated as follows: $I_{L1(pk)} = I_{LOAD(Max)} + (V_{IN} - V_{OUT}) \times t_{on}/2L1$ Where $t_{on} = V_{OUT}/V_{IN} \times (1/f_{osc})$	**2. Inductor Selection (L1)** **A.** Calculate the "set" volts-second (E•T) across L1: E•T = (25 – 10) × (10/25) × (1000/52) [V•µs] E•T = 115 V•µs **B.** Using Figure 19, the intersection of 115 V•µs and 1 A corresponds to an inductor code of H470. **C.** H470 → L1 = 470 µF Choose from: 34048 (Schott) PE-53118 (Pulse Engineering) RL1961 (Renco)
3. Output Capacitor Selection (C_{OUT}) **A.** The TL2575 control loop has a two-pole two-zero frequency response. The dominant pole-zero pair is established by C_{OUT} and L1. To meet stability requirements, C_{OUT} must meet the following requirement: $C_{OUT} \geq 7758 \frac{V_{IN(Max)}}{V_{OUT} \bullet L1(\mu H)}$ (µF) However, C_{OUT} may need to be several times larger than the calculated value above in order to achieve an acceptable output ripple voltage of ~0.01 × V_{OUT}. **B.** C_{OUT} should have a voltage rating of at least 1.5 × V_{OUT}. But if a low output ripple voltage is desired, choose capacitors with a higher voltage ratings than the minimum required due to their typically lower ESRs.	**3. Output Capacitor Selection (C_{OUT})** **A.** $C_{OUT} \geq 7785 \times 25/(10 \times 470)$ [µF] $C_{OUT} \geq 41.4$ µF To obtain an acceptable output voltage ripple → C_{OUT} = 220 µF electrolytic
4. Catch Diode Selection (D1) (see Table 1) **A.** In normal operation, the catch diode requires a current rating of at least 1.2 × $I_{LOAD(Max)}$. For the most robust design, D1 should be rated for a current equal to the TL2575 maximum switch peak current; this represents the worst-case scenario of a continuous short at V_{OUT}. **B.** The diode requires a reverse voltage rating of at least 1.25 × $V_{IN(Max)}$.	**4. Catch Diode Selection (D1) (see Table 1)** **A.** Pick a diode with a 3-A rating. **B.** Pick a 40-V rated Schottky diode (1N5822, MBR340, 31QD04, or SR304) or 100-V rated Fast Recovery diode (31DF1, MURD310, or HER302)
5. Input Capacitor (C_{IN}) An aluminum electrolytic or tantalum capacitor is needed for input bypassing. Locate C_{IN} as close to V_{IN} and GND pins as possible.	**5. Input Capacitor (C_{IN})** C_{IN} = 100 µF, 35 V, aluminum electrolytic

Inductor Value Selection Guide for Continuous-Mode Operation

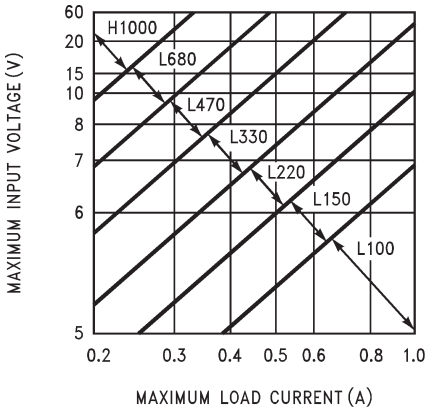

Figure 15. TL2575-33

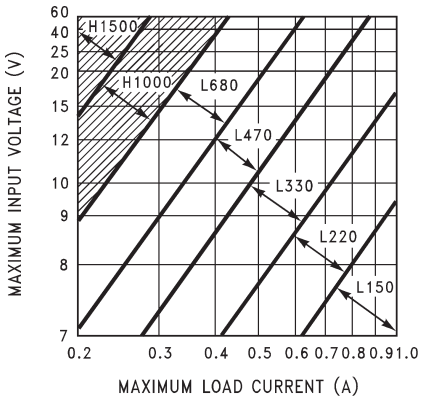

Figure 16. TL2575-50

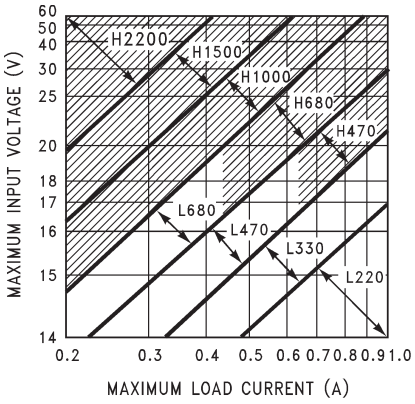

Figure 17. TL2575-12

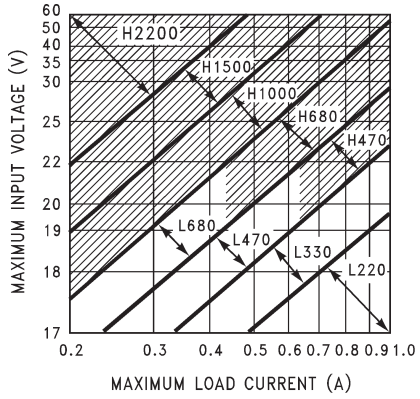

Figure 18. TL2575-15

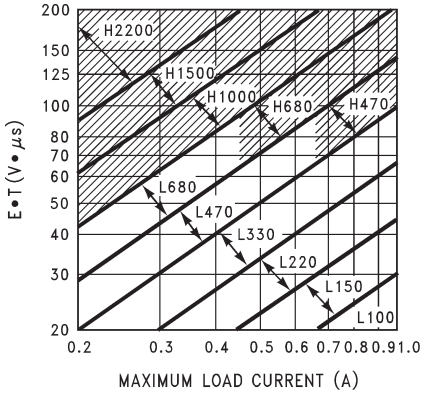

Figure 19. TL2575-ADJ

Table 1. Diode Selection Guide

V_R	SCHOTTKY		FAST RECOVERY	
	1A	3A	1A	3A
20 V	1N5817 MBR120P SR102	1N5820 MBR320 SR302	The following diodes are all rated to 100 V: 11DF1 MUR110 HER102	The following diodes are all rated to 100 V: 31DF1 MURD310 HER302
30 V	1N5818 MBR130P 11DQ03 SR103	1N5821 MBR330 31DQ03 SR303		
40 V	1N5819 MBR140P 11DQ04 SR104	IN5822 MBR340 31DQ04 SR304		
50 V	MBR150 11DQ05 SR105	MBR350 31DQ05 SR305		
60 V	MBR160 11DQ06 SR106	MBR360 31DQ06 SR306		

Table 2. Inductor Selection by Manufacturer's Part Number

INDUCTOR CODE	INDUCTOR VALUE (μH)	SCHOTT CORPORATION(1)	PULSE ENGINEERING(2)	RENCO ELECTRONICS(3)
L100	100	67127000	PE-92108	RL2444
L150	150	67127010	PE-53113	RL1954
L220	220	67127020	PE-52626	RL1953
L330	330	67127030	PE-52627	RL1952
L470	470	67127040	PE-53114	RL1951
L680	680	67127050	PE-52629	RL1950
H150	150	67127060	PE-53115	RL2445
H220	220	67127070	PE-53116	RL2446
H330	330	67127080	PE-53117	RL2447
H470	470	67127090	PE-53118	RL1961
H680	680	67127100	PE-53119	RL1960
H1000	1000	67127110	PE-53120	RL1959
H1500	1500	67127120	PE-53121	RL1958
H2200	2200	67127130	PE-53122	RL2448

(1) Schott Corporation, (612) 475-1173, 1000 Parkers Lake Rd., Wayzata, MN 55391
(2) Pulse Engineering, (619) 674-8100, P.O. Box 12236, San Diego, CA 92112
(3) Renco Electronics Inc., (516) 586-5566, 60 Jeffryn Blvd. East, Deer Park, NY 11729

PACKAGING INFORMATION

Orderable Device	Status (1)	Package Type	Package Drawing	Pins	Package Qty	Eco Plan (2)	Lead/Ball Finish	MSL Peak Temp (3)
TL2575-05IKTTR	ACTIVE	DDPAK/ TO-263	KTT	5	500	Green (RoHS & no Sb/Br)	CU SN	Level-3-245C-168 HR
TL2575-05IKV	ACTIVE	TO-220	KV	5	50	Pb-Free (RoHS)	CU SN	N / A for Pkg Type
TL2575-05IN	ACTIVE	PDIP	N	16	25	Pb-Free (RoHS)	CU NIPD	N / A for Pkg Type
TL2575-12IKTTR	ACTIVE	DDPAK/ TO-263	KTT	5	500	Green (RoHS & no Sb/Br)	CU SN	Level-3-245C-168 HR
TL2575-12IKV	ACTIVE	TO-220	KV	5	50	Pb-Free (RoHS)	CU SN	N / A for Pkg Type
TL2575-12IN	ACTIVE	PDIP	N	16	25	Pb-Free (RoHS)	CU NIPD	N / A for Pkg Type
TL2575-12INE4	ACTIVE	PDIP	N	16	25	Pb-Free (RoHS)	CU NIPD	N / A for Pkg Type
TL2575-15IKTTR	ACTIVE	DDPAK/ TO-263	KTT	5	500	Green (RoHS & no Sb/Br)	CU SN	Level-3-245C-168 HR
TL2575-15IKV	ACTIVE	TO-220	KV	5	50	Pb-Free (RoHS)	CU SN	N / A for Pkg Type
TL2575-15IN	ACTIVE	PDIP	N	16	25	Pb-Free (RoHS)	CU NIPD	N / A for Pkg Type
TL2575-15INE4	ACTIVE	PDIP	N	16	25	Pb-Free (RoHS)	CU NIPD	N / A for Pkg Type
TL2575-33IKTTR	ACTIVE	DDPAK/ TO-263	KTT	5	500	Green (RoHS & no Sb/Br)	CU SN	Level-3-245C-168 HR
TL2575-33IKV	ACTIVE	TO-220	KV	5	50	Pb-Free (RoHS)	CU SN	N / A for Pkg Type
TL2575-33IN	ACTIVE	PDIP	N	16	25	Pb-Free (RoHS)	CU NIPD	N / A for Pkg Type
TL2575-ADJIKTTR	ACTIVE	DDPAK/ TO-263	KTT	5	500	Green (RoHS & no Sb/Br)	CU SN	Level-3-245C-168 HR
TL2575-ADJIKV	ACTIVE	TO-220	KV	5	50	Pb-Free (RoHS)	CU SN	N / A for Pkg Type
TL2575-ADJIN	ACTIVE	PDIP	N	16	25	Pb-Free (RoHS)	CU NIPD	N / A for Pkg Type
TL2575-ADJINE4	ACTIVE	PDIP	N	16	25	Pb-Free (RoHS)	CU NIPD	N / A for Pkg Type
TL2575HV-05IKTTR	ACTIVE	DDPAK/ TO-263	KTT	5	500	Green (RoHS & no Sb/Br)	CU SN	Level-3-245C-168 HR
TL2575HV-05IKV	ACTIVE	TO-220	KV	5	50	Pb-Free (RoHS)	CU SN	N / A for Pkg Type
TL2575HV-05IN	ACTIVE	PDIP	N	16	25	Pb-Free (RoHS)	CU NIPD	N / A for Pkg Type
TL2575HV-05INE4	ACTIVE	PDIP	N	16	25	Pb-Free (RoHS)	CU NIPD	N / A for Pkg Type
TL2575HV-12IKTTR	ACTIVE	DDPAK/ TO-263	KTT	5	500	Green (RoHS & no Sb/Br)	CU SN	Level-3-245C-168 HR
TL2575HV-12IKV	ACTIVE	TO-220	KV	5	50	Pb-Free (RoHS)	CU SN	N / A for Pkg Type
TL2575HV-12IN	ACTIVE	PDIP	N	16	25	Pb-Free (RoHS)	CU NIPD	N / A for Pkg Type

Orderable Device	Status [1]	Package Type	Package Drawing	Pins	Package Qty	Eco Plan [2]	Lead/Ball Finish	MSL Peak Temp [3]
TL2575HV-12INE4	ACTIVE	PDIP	N	16	25	Pb-Free (RoHS)	CU NIPD	N / A for Pkg Type
TL2575HV-15IKTTR	ACTIVE	DDPAK/ TO-263	KTT	5	500	Green (RoHS & no Sb/Br)	CU SN	Level-3-245C-168 HR
TL2575HV-15IKV	ACTIVE	TO-220	KV	5	50	Pb-Free (RoHS)	CU SN	N / A for Pkg Type
TL2575HV-15IN	ACTIVE	PDIP	N	16	25	Pb-Free (RoHS)	CU NIPD	N / A for Pkg Type
TL2575HV-15INE4	ACTIVE	PDIP	N	16	25	Pb-Free (RoHS)	CU NIPD	N / A for Pkg Type
TL2575HV-33IKTTR	ACTIVE	DDPAK/ TO-263	KTT	5	500	Green (RoHS & no Sb/Br)	CU SN	Level-3-245C-168 HR
TL2575HV-33IKV	ACTIVE	TO-220	KV	5	50	Pb-Free (RoHS)	CU SN	N / A for Pkg Type
TL2575HV-33IN	ACTIVE	PDIP	N	16	25	Pb-Free (RoHS)	CU NIPD	N / A for Pkg Type
TL2575HV-33INE4	ACTIVE	PDIP	N	16	25	Pb-Free (RoHS)	CU NIPD	N / A for Pkg Type
TL2575HV-ADJIKTTR	ACTIVE	DDPAK/ TO-263	KTT	5	500	Green (RoHS & no Sb/Br)	CU SN	Level-3-245C-168 HR
TL2575HV-ADJIKV	ACTIVE	TO-220	KV	5	50	Pb-Free (RoHS)	CU SN	N / A for Pkg Type
TL2575HV-ADJIN	ACTIVE	PDIP	N	16	25	Pb-Free (RoHS)	CU NIPD	N / A for Pkg Type
TL2575HV-ADJINE4	ACTIVE	PDIP	N	16	25	Pb-Free (RoHS)	CU NIPD	N / A for Pkg Type

[1] The marketing status values are defined as follows:
ACTIVE: Product device recommended for new designs.
LIFEBUY: TI has announced that the device will be discontinued, and a lifetime-buy period is in effect.
NRND: Not recommended for new designs. Device is in production to support existing customers, but TI does not recommend using this part in a new design.
PREVIEW: Device has been announced but is not in production. Samples may or may not be available.
OBSOLETE: TI has discontinued the production of the device.

[2] Eco Plan - The planned eco-friendly classification: Pb-Free (RoHS), Pb-Free (RoHS Exempt), or Green (RoHS & no Sb/Br) - please check http://www.ti.com/productcontent for the latest availability information and additional product content details.
TBD: The Pb-Free/Green conversion plan has not been defined.
Pb-Free (RoHS): TI's terms "Lead-Free" or "Pb-Free" mean semiconductor products that are compatible with the current RoHS requirements for all 6 substances, including the requirement that lead not exceed 0.1% by weight in homogeneous materials. Where designed to be soldered at high temperatures, TI Pb-Free products are suitable for use in specified lead-free processes.
Pb-Free (RoHS Exempt): This component has a RoHS exemption for either 1) lead-based flip-chip solder bumps used between the die and package, or 2) lead-based die adhesive used between the die and leadframe. The component is otherwise considered Pb-Free (RoHS compatible) as defined above.
Green (RoHS & no Sb/Br): TI defines "Green" to mean Pb-Free (RoHS compatible), and free of Bromine (Br) and Antimony (Sb) based flame retardants (Br or Sb do not exceed 0.1% by weight in homogeneous material)

[3] MSL, Peak Temp. -- The Moisture Sensitivity Level rating according to the JEDEC industry standard classifications, and peak solder temperature.

Important Information and Disclaimer: The information provided on this page represents TI's knowledge and belief as of the date that it is provided. TI bases its knowledge and belief on information provided by third parties, and makes no representation or warranty as to the accuracy of such information. Efforts are underway to better integrate information from third parties. TI has taken and continues to take reasonable steps to provide representative and accurate information but may not have conducted destructive testing or chemical analysis on incoming materials and chemicals. TI and TI suppliers consider certain information to be proprietary, and thus CAS numbers and other limited information may not be available for release.

In no event shall TI's liability arising out of such information exceed the total purchase price of the TI part(s) at issue in this document sold by TI to Customer on an annual basis.

N (R–PDIP–T**)

PLASTIC DUAL–IN–LINE PACKAGE

16 PINS SHOWN

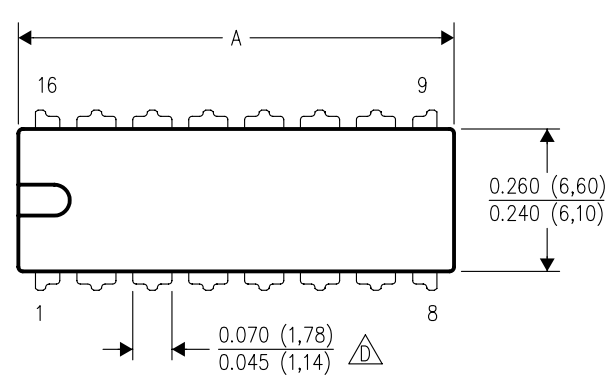

DIM \ PINS **	14	16	18	20
A MAX	0.775 (19,69)	0.775 (19,69)	0.920 (23,37)	1.060 (26,92)
A MIN	0.745 (18,92)	0.745 (18,92)	0.850 (21,59)	0.940 (23,88)
MS–001 VARIATION (C)	AA	BB	AC	AD

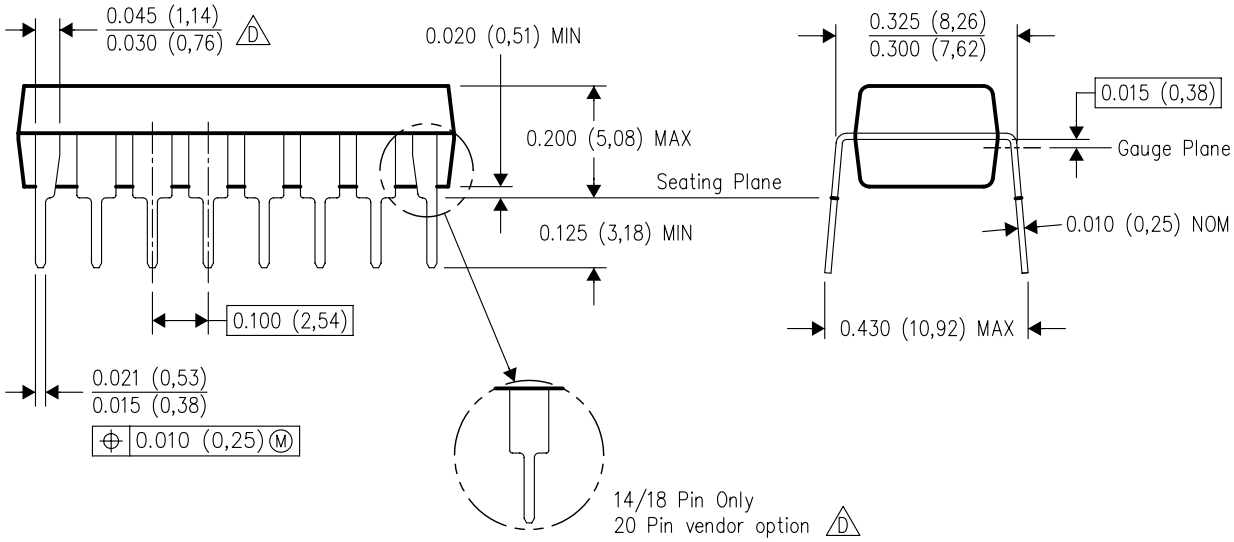

4040049/E 12/2002

NOTES:
A. All linear dimensions are in inches (millimeters).
B. This drawing is subject to change without notice.
C. Falls within JEDEC MS–001, except 18 and 20 pin minimum body length (Dim A).
D. The 20 pin end lead shoulder width is a vendor option, either half or full width.

KTT (R–PSFM–G5) PLASTIC FLANGE–MOUNT PACKAGE

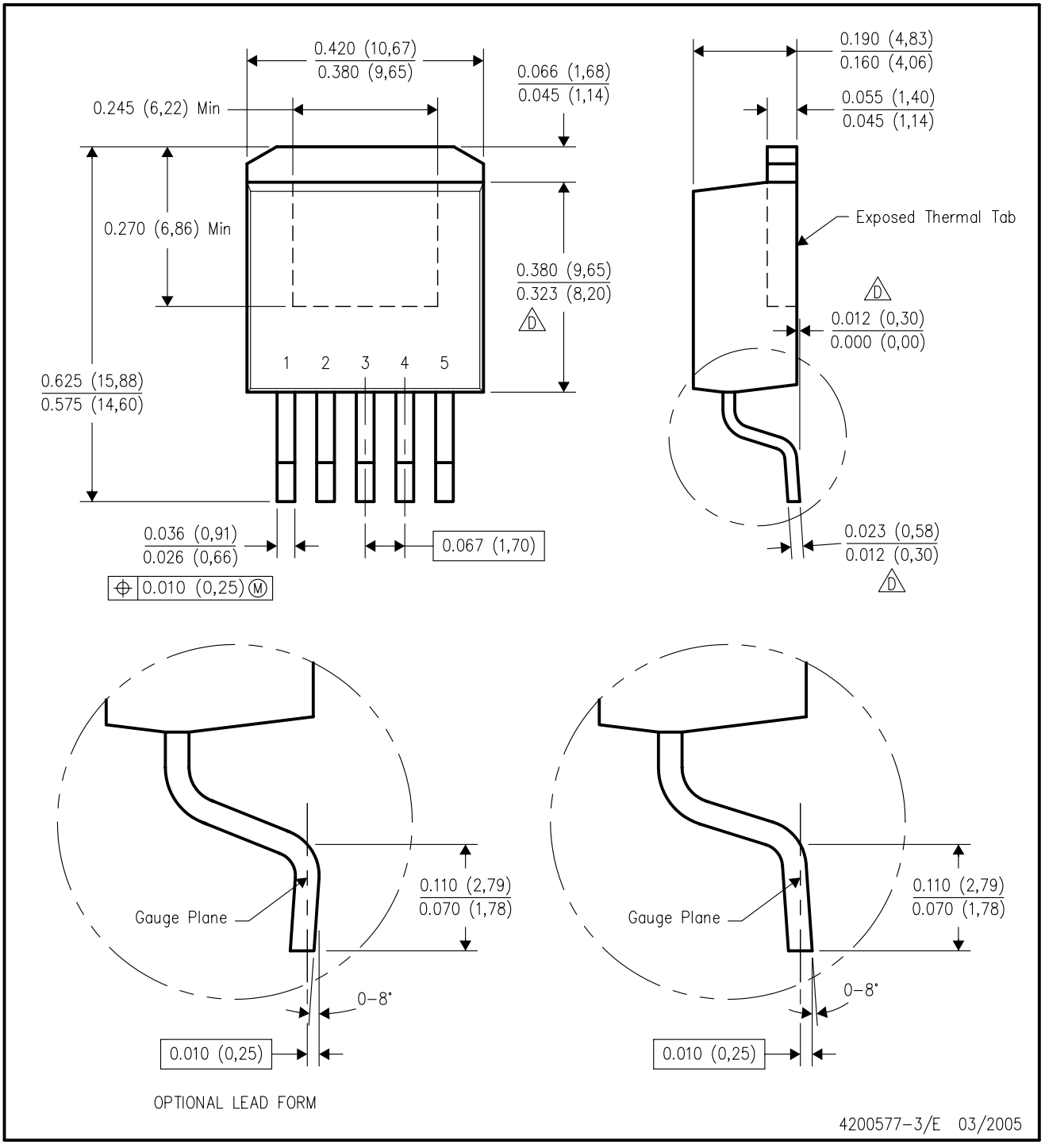

NOTES:
A. All linear dimensions are in inches (millimeters).
B. This drawing is subject to change without notice.
C. Body dimensions do not include mold flash or protrusion. Mold flash or protrusion not to exceed 0.005 (0,13) per side.
D. Falls within JEDEC TO–263 variation BA, except minimum lead thickness, maximum seating height, and minimum body length.

KTT (R–PSFM–G5)

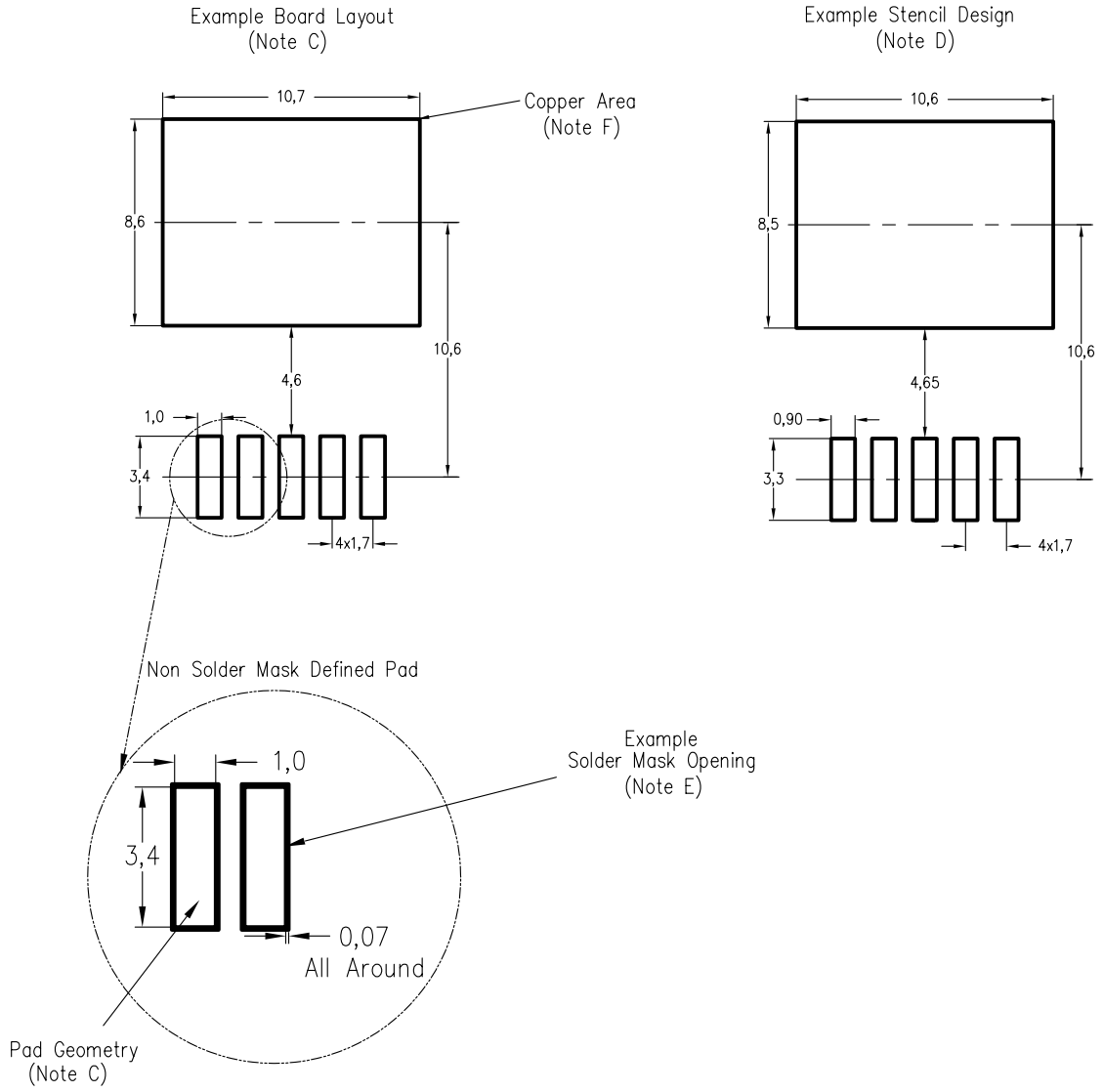

NOTES:
A. All linear dimensions are in millimeters.
B. This drawing is subject to change without notice.
C. Publication IPC–SM–782 is recommended for alternate designs.
D. Laser cutting apertures with trapezoidal walls and also rounding corners will offer better paste release. Customers should contact their board assembly site for stencil design recommendations. Refer to IPC–7525.
E. Customers should contact their board fabrication site for solder mask tolerances between and around signal pads.
F. This package is designed to be soldered to a thermal pad on the board. Refer to the Product Datasheet for specific thermal information, via requirements, and recommended thermal pad size. For thermal pad sizes larger than shown a solder mask defined pad is recommended in order to maintain the solderable pad geometry while increasing copper area.

KV (R–PZFM–T5) PLASTIC FLANGE–MOUNT PACKAGE

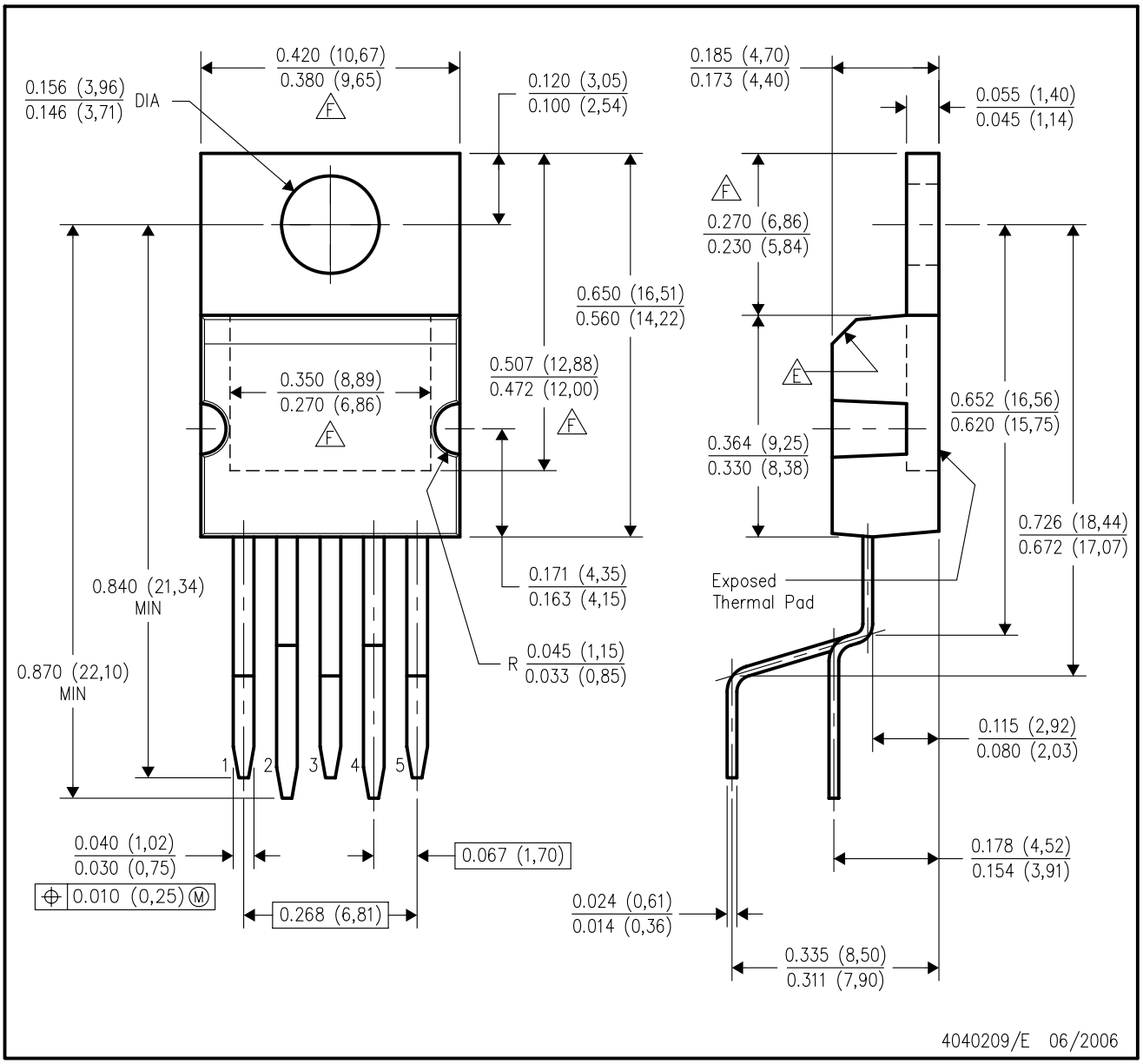

NOTES:
A. All linear dimensions are in inches (millimeters).
B. This drawing is subject to change without notice.
C. All lead dimensions apply before solder dip.
D. The center lead is in electrical contact with the mounting tab.
E. The chamfer is optional.
F. Thermal pad contour optional within these dimensions.

IMPORTANT NOTICE

Texas Instruments Incorporated and its subsidiaries (TI) reserve the right to make corrections, modifications, enhancements, improvements, and other changes to its products and services at any time and to discontinue any product or service without notice. Customers should obtain the latest relevant information before placing orders and should verify that such information is current and complete. All products are sold subject to TI's terms and conditions of sale supplied at the time of order acknowledgment.

TI warrants performance of its hardware products to the specifications applicable at the time of sale in accordance with TI's standard warranty. Testing and other quality control techniques are used to the extent TI deems necessary to support this warranty. Except where mandated by government requirements, testing of all parameters of each product is not necessarily performed.

TI assumes no liability for applications assistance or customer product design. Customers are responsible for their products and applications using TI components. To minimize the risks associated with customer products and applications, customers should provide adequate design and operating safeguards.

TI does not warrant or represent that any license, either express or implied, is granted under any TI patent right, copyright, mask work right, or other TI intellectual property right relating to any combination, machine, or process in which TI products or services are used. Information published by TI regarding third-party products or services does not constitute a license from TI to use such products or services or a warranty or endorsement thereof. Use of such information may require a license from a third party under the patents or other intellectual property of the third party, or a license from TI under the patents or other intellectual property of TI.

Reproduction of information in TI data books or data sheets is permissible only if reproduction is without alteration and is accompanied by all associated warranties, conditions, limitations, and notices. Reproduction of this information with alteration is an unfair and deceptive business practice. TI is not responsible or liable for such altered documentation.

Resale of TI products or services with statements different from or beyond the parameters stated by TI for that product or service voids all express and any implied warranties for the associated TI product or service and is an unfair and deceptive business practice. TI is not responsible or liable for any such statements.

Following are URLs where you can obtain information on other Texas Instruments products and application solutions:

Products		**Applications**	
Amplifiers	amplifier.ti.com	Audio	www.ti.com/audio
Data Converters	dataconverter.ti.com	Automotive	www.ti.com/automotive
DSP	dsp.ti.com	Broadband	www.ti.com/broadband
Interface	interface.ti.com	Digital Control	www.ti.com/digitalcontrol
Logic	logic.ti.com	Military	www.ti.com/military
Power Mgmt	power.ti.com	Optical Networking	www.ti.com/opticalnetwork
Microcontrollers	microcontroller.ti.com	Security	www.ti.com/security
Low Power Wireless	www.ti.com/lpw	Telephony	www.ti.com/telephony
		Video & Imaging	www.ti.com/video
		Wireless	www.ti.com/wireless

Mailing Address: Texas Instruments
Post Office Box 655303 Dallas, Texas 75265

Copyright © 2007, Texas Instruments Incorporated