TL1431

Adjustable voltage reference

Datasheet - production data

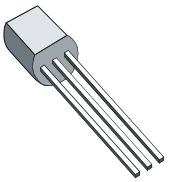

Z

TO-92

(Plastic package)



L

SOT23-3L

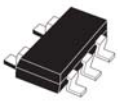

L

SOT23-5L

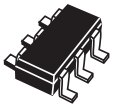

C

SOT323-6L

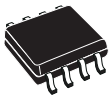

D

SO-8

(Batwing plastic micropackage)

Features

- Adjustable output voltage: V_{REF} to 36 V
- Sink current capability: 1 to 100 mA
- Typical output impedance: 0.22 Ω
- 0.4% and 0.25% voltage precision
- Automotive temp. range - 40 °C to +125 °C

Description

The TL1431 is an adjustable shunt voltage reference with guaranteed temperature stability over the entire operating temperature range.

The output voltage may be set to any value between 2.5 V and 36 V with two external resistors.

The TL1431 operates with a wide current range from 1 to 100 mA with a typical dynamic impedance of 0.2 Ω.

This is information on a product in full production.

Contents

1 Schematic diagrams 3

2 Absolute maximum ratings and operating conditions 4

3 Electrical characteristics 6

4 Parameter definitions 12

4.1 Reference input voltage deviation overtemperature range 12

4.2 Temperature coefficient of reference input voltage 12

4.3 Dynamic impedance 12

5 Package information 13

5.1 SO-8 package information 14

5.2 TO-92 Ammopack package information 15

5.3 TO-92 (bulk) package information 17

5.4 SOT23-3L package information 18

5.5 SOT23-5L package information 19

5.6 SOT323-6L package information 20

5.7 SO-8 packing information 21

5.8 SOT23-3L packing information 22

5.9 SOT23-5L packing information 23

5.10 SOT323-6L packing information 24

6 Ordering information 25

7 Revision history 26

1 Schematic diagrams

Figure 1. TO-92 pin connections (top view)

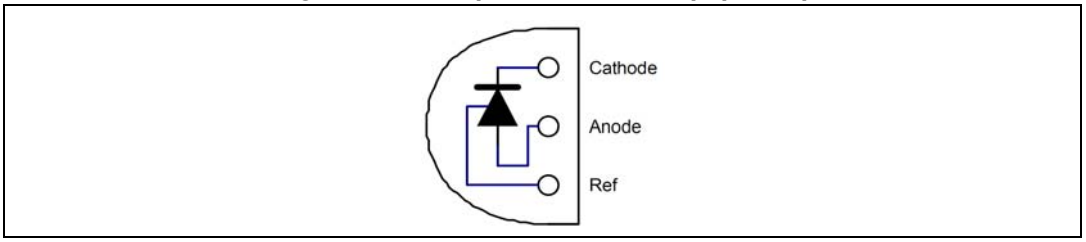

Figure 2. SO-8 batwing pin connections (top view)

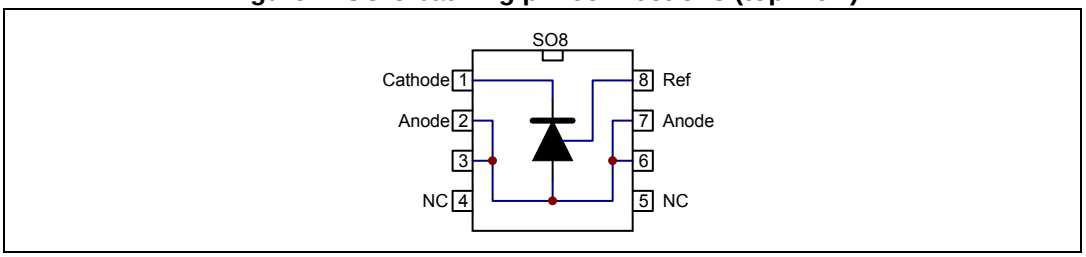

Figure 3. SOT23-5L and SOT23-3L pin connections (top view)

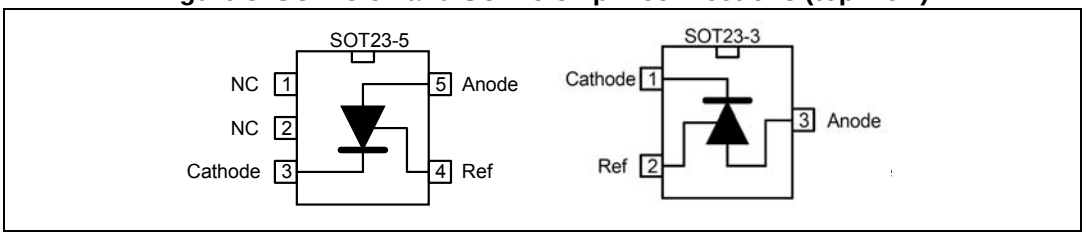

Figure 4. SOT323-6L pin connections (top view)

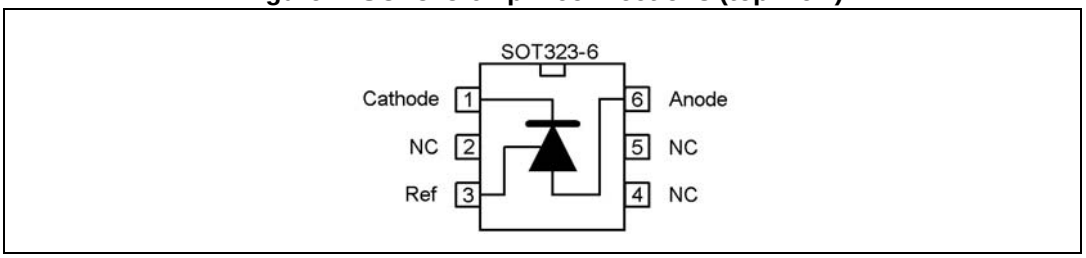

Figure 5. Block diagram

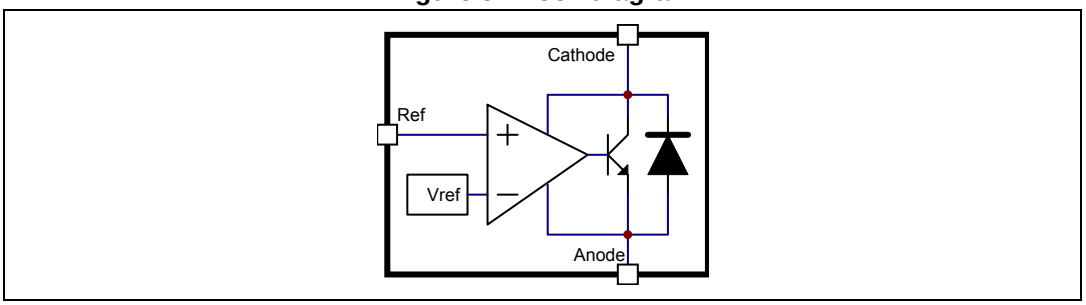

2 Absolute maximum ratings and operating conditions

Table 1. Absolute maximum ratings

Symbol	Parameter	Value	Unit
V_{KA}	Cathode-to-anode voltage	37	V
I_k	Continuous cathode current range	-100 to +150	mA
I_{ref}	Reference input current range	-0.05 to +10	mA
T_j	Junction temperature	+150	°C
P_d	Power dissipation(1)		mW
	TO92	625	
	SO-8 batwing	960	
	SOT23-3L	500	
	SOT23-5L	790	
	SOT323-6L	565	
T_{stg}	Storage temperature range	-65 to +150	°C
ESD	HBM: human body model(2)	2000	V
	MM: machine model(3)	200	
	CDM: charged device model(4)	1500	

1. Calculated with T_j =+150 °C and T_{amb} =+25 °C with relative R_{thja} depending on the package.
2. Human body model: A 100 pF capacitor is charged to the specified voltage, then discharged through a 1.5 kΩ resistor between two pins of the device. This happens for all couples of connected pin combinations while the other pins are left floating.
3. Machine model: A 200 pF capacitor is charged to the specified voltage, then discharged directly between two pins of the device with no external series resistor (internal resistor < 5 Ω). This happens for all couples of connected pin combinations while the other pins are left floating.
4. Charged device model: all pins and the package are charged together to the specified voltage and then discharged directly to the ground through only one pin. This happens for all pins

Table 2. Operating conditions

Symbol	Parameter	Value	Unit
V_{KA}	Cathode-to-anode voltage	V_{ref} to 36	V
I_k	Cathode current	1 to 100	mA
T_{oper}	Operating free-air temperature range		°C
	TL1431C/AC	-20 to +70	
	TL1431I/AI	-40 to +105	
	TL1431IY/AIY	-40 to +125	

Table 3. Thermal data

Symbol	Parameter	TO-92	SO-8 batwing	SOT23-3L	SOT23-5L	SOT323-6L	Unit
R_{thJC}	Thermal resistance junction-case	57	30	136	67	110	°C/W
R_{thJA}	Thermal resistance junction-ambient	200	85	248	157	221	

3 Electrical characteristics

T_{amb} = 25 °C (unless otherwise specified).

Table 4. Electrical characteristics for TL1431C, TL1431AC

Symbol	Parameter	TL1431C			TL1431AC			Unit
		Min.	Typ.	Max.	Min.	Typ.	Max.	
V_{ref}	Reference input voltage - see *Figure 6* $V_{KA} = V_{ref}$, I_k = 10 mA	2.490	2.500	2.510	2.493	2.500	2.507	V
ΔV_{ref}	Reference input voltage deviation over temperature range (1) - see *Figure 6* $V_{KA} = V_{ref}$, I_k = 10 mA, $T_{min} \leq T_{amb} \leq T_{max}$		3	20		3	20	mV
$\frac{\Delta Vref}{\Delta T}$	Temperature coefficient of reference input voltage(2) $V_{KA} = V_{ref}$, I_k = 10 mA, $T_{min} \leq T_{amb} \leq T_{max}$		±13	±90		±13	±90	ppm/°C
$\frac{\Delta Vref}{\Delta Vka}$	Ratio of change in reference input voltage to change in cathode to anode voltage (see *Figure 7*) I_k = 10 mA - ΔV_{KA} = 36 V to 3 V	-2	-1.1		-2	-1.1		mV/V
I_{ref}	Reference input current I_k = 10 mA, R1 = 10 kΩ, R2 = ∞ $T_{min} \leq T_{amb} \leq T_{max}$		1.5	2.5 3		1.5	2.5 3	µA
ΔI_{ref}	Reference input current deviation over temperature range I_k = 10 mA, R1 = 10 kΩ, R2 =∞, $T_{min} \leq T_{amb} \leq T_{max}$		0.2	1.2		0.2	1.2	µA
I_{min}	Minimum cathode current for regulation *Figure 6* $V_{KA} = V_{ref}$		0.5	1		0.5	0.6	mA
I_{off}	Off-state cathode current (see *Figure 8*)		180	500		180	500	nA
$\lvert Z_{KA} \rvert$	Dynamic impedance (3) $V_{KA} = V_{ref}$, ΔI_k = 1 to100 mA, f ≤ 1 kHz		0.2	0.5		0.2	0.5	Ω

1. See *Reference input voltage deviation overtemperature range* in *Section 4: Parameter definitions on page 12*.
2. See *Temperature coefficient of reference input voltage* in *Section 4: Parameter definitions on page 12*.
3. See *Dynamic impedance* in *Section 4: Parameter definitions on page 12*.

T_{amb} = 25 °C (unless otherwise specified).

Table 5. Electrical characteristics for TL1431I, TL1431AI

Symbol	Parameter	TL1431I			TL1431AI			Unit
		Min.	Typ.	Max.	Min.	Typ.	Max.	
V_{ref}	Reference input voltage - see *Figure 6* $V_{KA} = V_{ref}$, I_k = 10 mA	2.490	2.500	2.510	2.493	2.500	2.507	V
ΔV_{ref}	Reference input voltage deviation over temperature range (1) - see *Figure 6* $V_{KA} = V_{ref}$, I_k = 10 mA, $T_{min} \leq T_{amb} \leq T_{max}$		7	30		7	30	mV
$\frac{\Delta Vref}{\Delta T}$	Temperature coefficient of reference input voltage(2) $V_{KA} = V_{ref}$, I_k = 10 mA, $T_{min} \leq T_{amb} \leq T_{max}$		±22	±100		±22	±100	ppm/°C
$\frac{\Delta Vref}{\Delta Vka}$	Ratio of change in reference input voltage to change in cathode to anode voltage - see *Figure 7* I_k = 10 mA - ΔV_{KA} = 36 V to 3 V	-2	-1.1		-2	-1.1		mV/V
I_{ref}	Reference input current I_k = 10 mA, R1 = 10 kΩ, R2 = ∞ $T_{min} \leq T_{amb} \leq T_{max}$		1.5	2.5 3		1.5	2.5 3	µA
ΔI_{ref}	Reference input current deviation over temperature range I_k = 10 mA, R1 = 10 kΩ, R2 =∞, $T_{min} \leq T_{amb} \leq T_{max}$		0.5	1		0.8	1.2	µA
I_{min}	Minimum cathode current for regulation - see *Figure 6* $V_{KA} = V_{ref}$		0.5	1		0.5	0.7	mA
I_{off}	Off-state cathode current - see *Figure 8*		180	500		180	500	nA
$\lvert Z_{KA} \rvert$	Dynamic impedance (3) $V_{KA} = V_{ref}$, ΔI_k= 1 to100 mA, f ≤ 1 kHz		0.2	0.5		0.2	0.5	Ω

1. See *Reference input voltage deviation overtemperature range* in *Section 4: Parameter definitions on page 12*.
2. See *Temperature coefficient of reference input voltage* in *Section 4: Parameter definitions on page 12*.
3. See *Dynamic impedance* in *Section 4: Parameter definitions on page 12*.

T_{amb} = 25 °C (unless otherwise specified).

Table 6. Electrical characteristics for TL1431IY, TL1431AIY

Symbol	Parameter	TL1431IY			TL1431AIY			Unit
		Min.	Typ.	Max.	Min.	Typ.	Max.	
V_{ref}	Reference input voltage - see *Figure 6* $V_{KA} = V_{ref}$, I_k = 10 mA	2.490	2.500	2.510	2.493	2.500	2.507	V
ΔV_{ref}	Reference input voltage deviation over temperature range (1) - see *Figure 6* $V_{KA} = V_{ref}$, I_k = 10 mA, $T_{min} \leq T_{amb} \leq T_{max}$		7	30		7	30	mV
$\frac{\Delta Vref}{\Delta T}$	Temperature coefficient of reference input voltage(2) $V_{KA} = V_{ref}$, I_k = 10 mA, $T_{min} \leq T_{amb} \leq T_{max}$		±22	±100		±22	±100	ppm/°C
$\frac{\Delta Vref}{\Delta Vka}$	Ratio of change in reference input voltage to change in cathode to anode voltage - see *Figure 7* I_k = 10 mA - ΔV_{KA} = 36 V to 3 V	-2	-1.1		-2	-1.1		mV/V
I_{ref}	Reference input current I_k = 10 mA, R1 = 10 kΩ, R2 = ∞ $T_{min} \leq T_{amb} \leq T_{max}$		1.5	2.5 3		1.5	2.5 3	µA
ΔI_{ref}	Reference input current deviation over temperature range I_k = 10 mA, R1 = 10 kΩ, R2 =∞, $T_{min} \leq T_{amb} \leq T_{max}$		0.5	1		0.8	1.2	µA
I_{min}	Minimum cathode current for regulation - see *Figure 6* $V_{KA} = V_{ref}$		0.5	1		0.5	0.7	mA
I_{off}	Off-state cathode current - see *Figure 8*		180	500		180	500	nA
$\lvert Z_{KA} \rvert$	Dynamic impedance (3) $V_{KA} = V_{ref}$, ΔI_k= 1 to100 mA, f ≤ 1 kHz		0.2	0.5		0.2	0.5	Ω

1. See *Reference input voltage deviation overtemperature range* in *Section 4: Parameter definitions on page 12*.
2. See *Temperature coefficient of reference input voltage* in *Section 4: Parameter definitions on page 12*.
3. See *Dynamic impedance* in *Section 4: Parameter definitions on page 12*.

Figure 6. Test circuit $V_{KA} = V_{REF}$

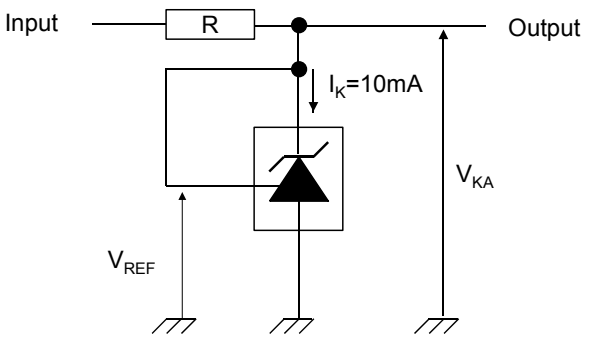

Figure 7. Test circuit for $V_{KA} > V_{REF}$

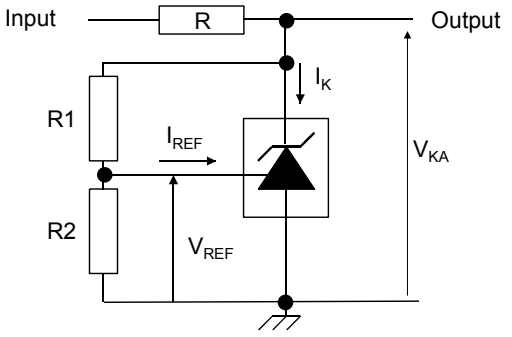

$$V_{KA} = V_{REF}\left(1 + \frac{R1}{R2}\right) + R1 \times I_{REF}$$

Figure 8. Test circuit for I_{OFF}

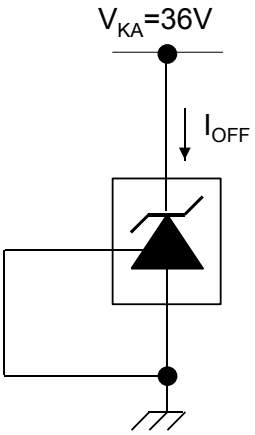

Figure 9. Test circuit for phase margin and voltage gain

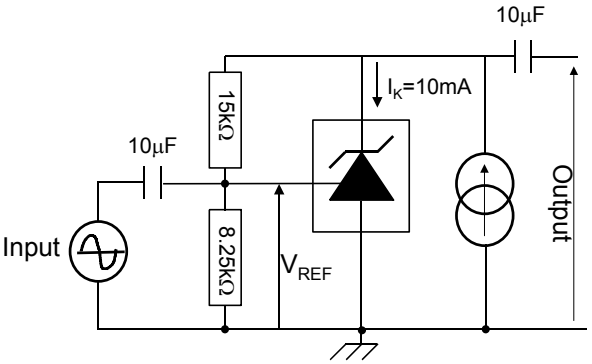

Figure 10. Test circuit for response time

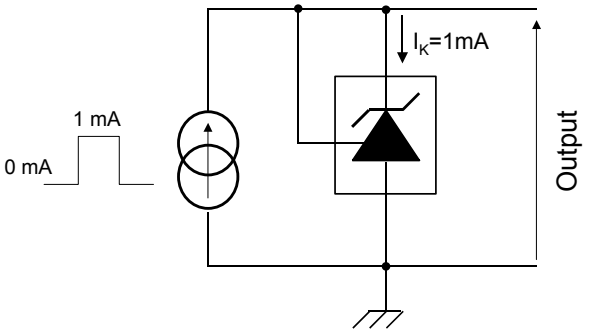

Figure 11. Reference voltage vs. temperature

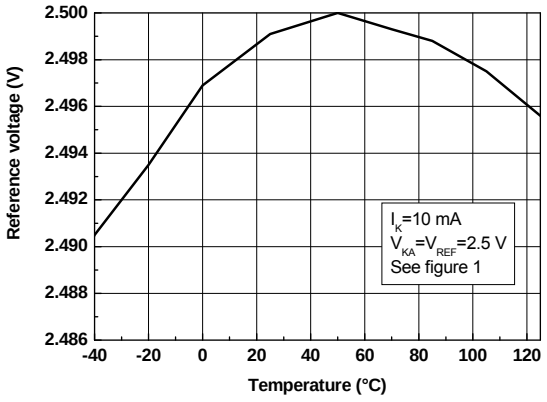

Figure 12. Reference voltage vs. cathode current

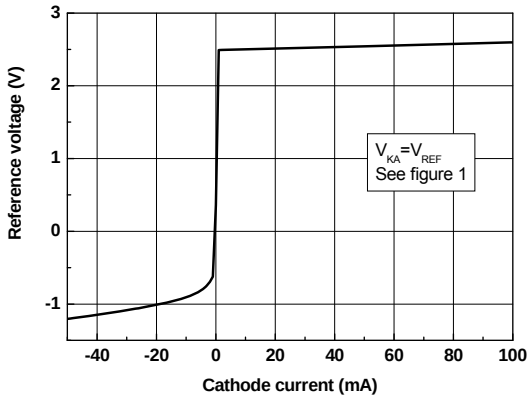

Figure 13. Reference voltage vs. cathode current (I_K = 0 to 1 mA)

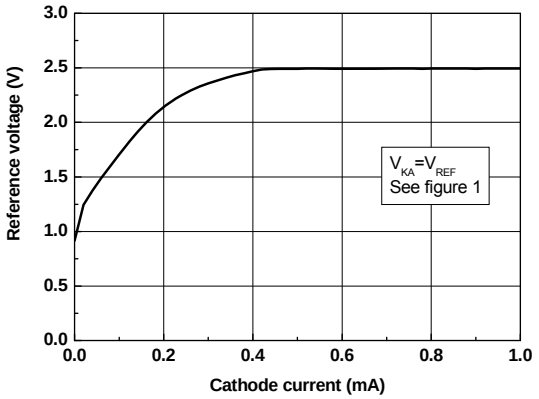

Figure 14. Reference current vs. temperature

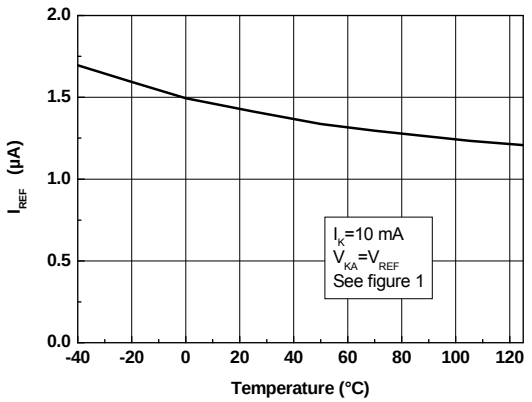

Figure 15. Off-state cathode current vs. temperature

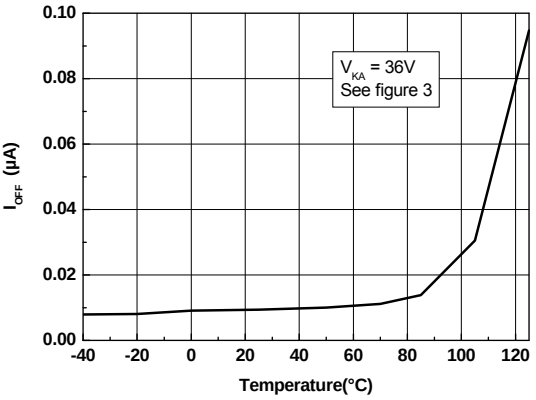

Figure 16. Ratio of change in V_{REF} to change in V_{KA} vs. temperature

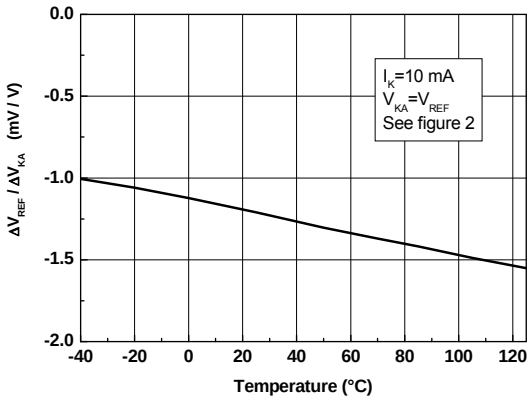

Figure 17. Drift of R_{KA} vs. temperature

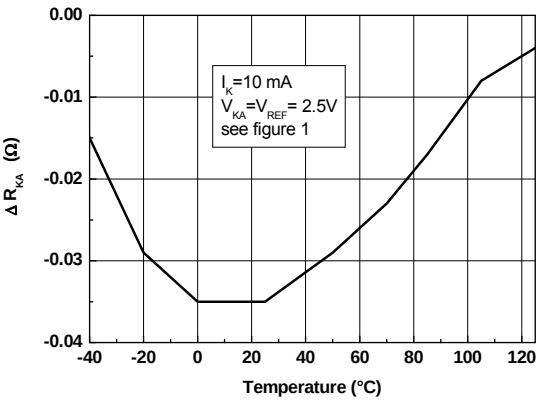

Figure 18. Maximum operating current vs. temperature

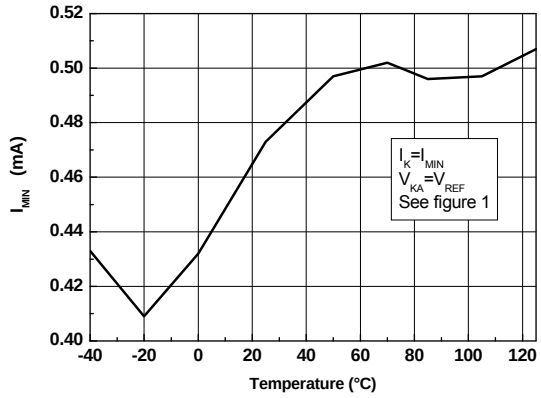

Figure 19. Gain and phase vs. frequency

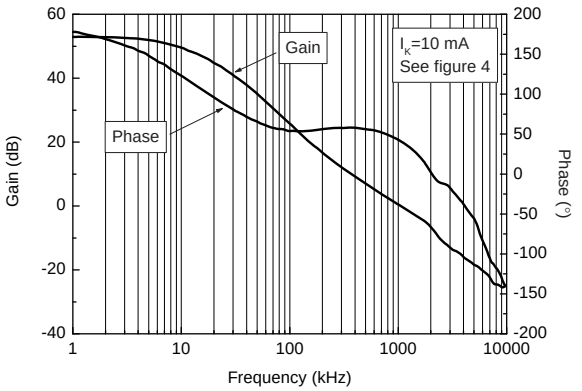

Figure 20. Stability behavior with capacitive loads

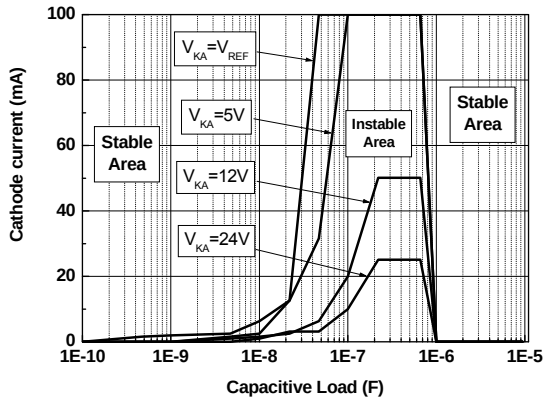

Figure 21. Maximum power dissipation

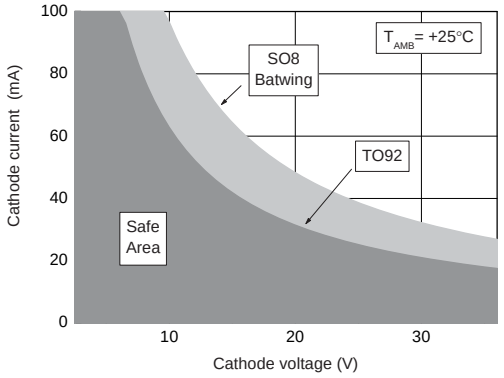

Figure 22. Pulse response for I_K = 1 mA

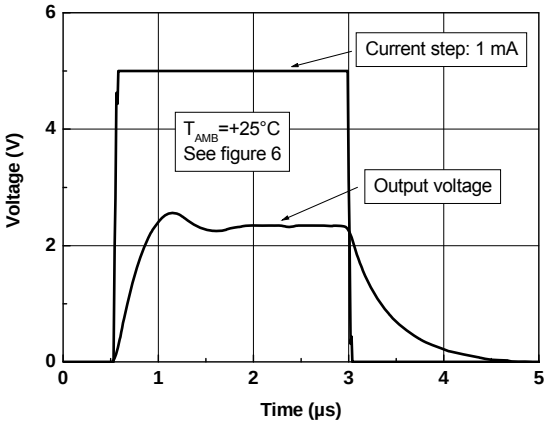

4 Parameter definitions

4.1 Reference input voltage deviation overtemperature range

ΔV_{ref} is defined as the difference between the maximum and minimum values obtained over the full temperature range.

$\Delta V_{ref} = V_{ref\ max.} - V_{ref\ min.}$

Figure 23. Reference input voltage deviation overtemperature range

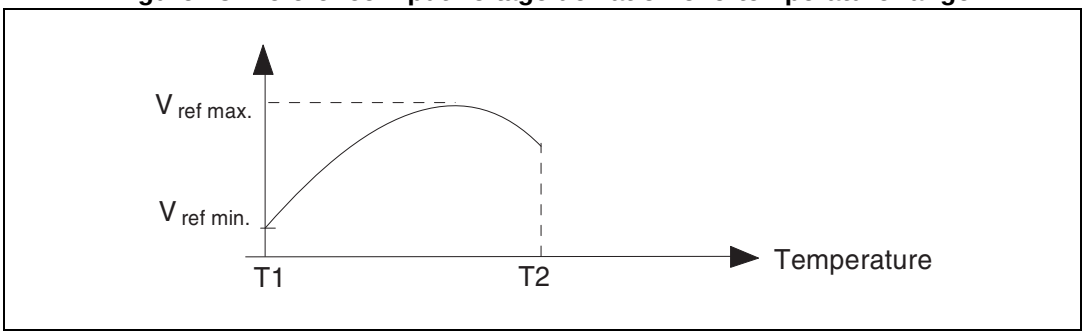

4.2 Temperature coefficient of reference input voltage

The temperature coefficient is defined as the slopes (positive and negative) of the voltage versus temperature limits within which the reference is guaranteed.

Figure 24. Temperature coefficient of reference input voltage

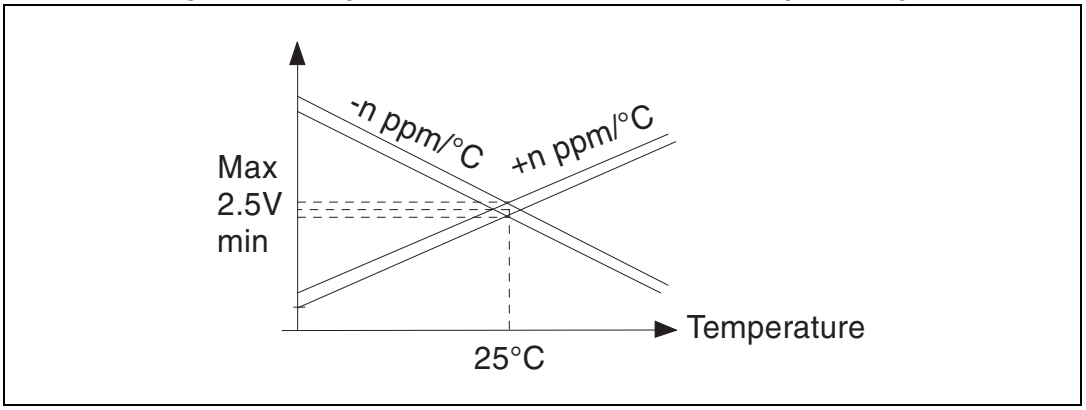

4.3 Dynamic impedance

The dynamic impedance is defined as $|Z_{KA}| = \frac{\Delta V_{KA}}{\Delta I_K}$

5 Package information

In order to meet environmental requirements, ST offers these devices in different grades of ECOPACK® packages, depending on their level of environmental compliance. ECOPACK® specifications, grade definitions and product status are available at: *www.st.com*.
ECOPACK® is an ST trademark.

5.1 SO-8 package information

Figure 25. SO-8 package outline

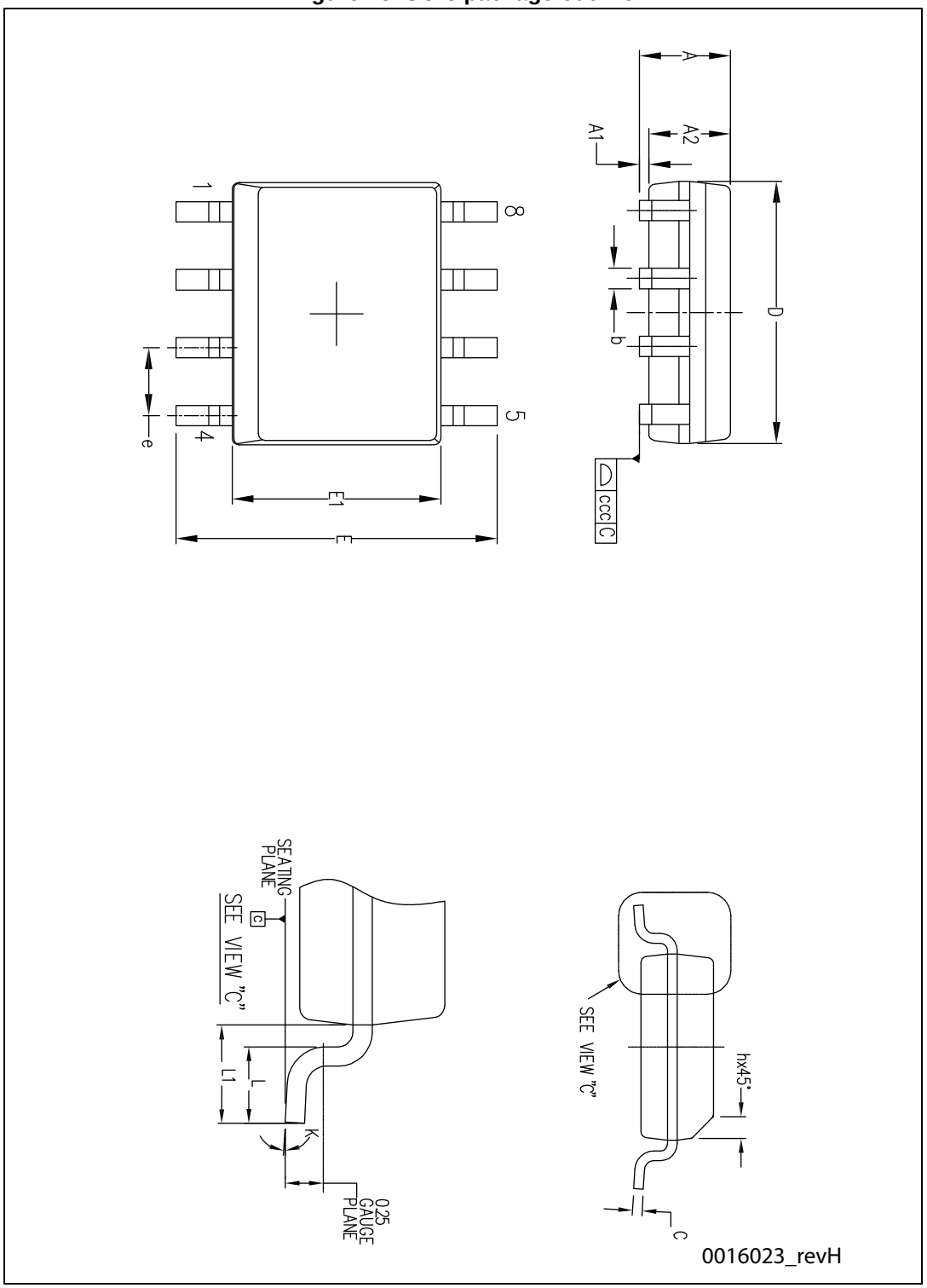

Table 7. SO-8 package mechanical data

Dim.	mm		
	Min.	Typ.	Max.
A			1.75
A1	0.10		0.25
A2	1.25		
b	0.28		0.48
c	0.17		0.23
D	4.80	4.90	5.00
E	5.80	6.00	6.20
E1	3.80	3.90	4.00
e		1.27	
h	0.25		0.50
L	0.40		1.27
L1		1.04	
k	0		8
ccc			0.10

5.2 TO-92 Ammopack package information

Figure 26. TO-92 Ammopack package outline

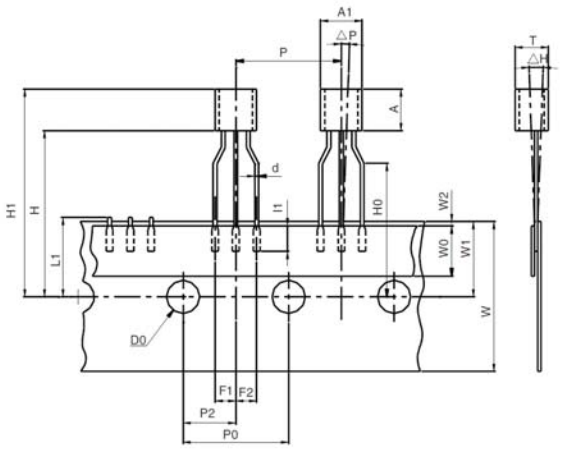

Table 8. TO-92 Ammopack package mechanical data

Dim.	Millimeters			Inches		
	Min.	Typ.	Max.	Min.	Typ.	Max.
A1			5.0			0.197
A			5.0			0.197
T			4.0			0.157
d		0.45			0.018	
I1	2.5			0.098		
P	11.7	12.7	13.7	0.461	0.500	0.539
PO	12.4	12.7	13	0.488	0.500	0.512
P2	5.95	6.35	6.75	0.234	0.250	0.266
F1/F2	2.4	2.5	2.8	0.094	0.098	0.110
Δh	-1	0	1	-0.039	0	0.039
ΔP	-1	0	1	-0.039	0	0.039
W	17.5	18.0	19.0	0.689	0.709	0.748
W0	5.7	6	6.3	0.224	0.236	0.248
W1	8.5	9	9.75	0.335	0.354	0.384
W2			0.5			0.020
H			20			0.787
H0	15.5	16	16.5	0.610	0.630	0.650
H1			25			0.984
DO	3.8	4.0	4.2	0.150	0.157	0.165
L1			11			0.433

5.3 TO-92 (bulk) package information

Figure 27. TO-92 bulk package outline

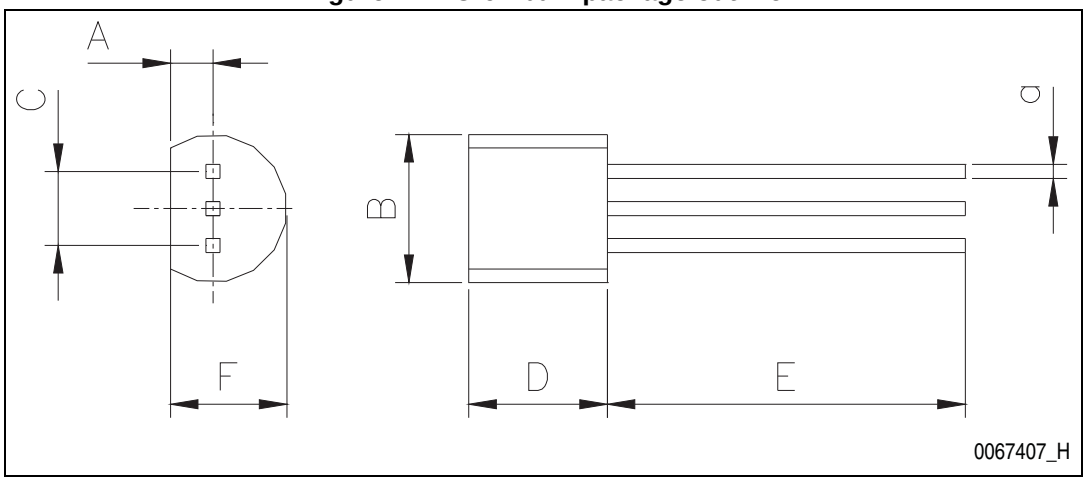

Table 9. TO-92 bulk package mechanical data

Dim.	Millimeters			Inches		
	Min.	Typ.	Max.	Min.	Typ.	Max.
A		1.35			0.053	
B			4.70			0.185
C		2.54			0.100	
D	4.40			0.173		
E	12.70			0.500		
F			3.70			0.146
a			0.5			0.019

5.4 SOT23-3L package information

Figure 28. SOT23-3L package outline

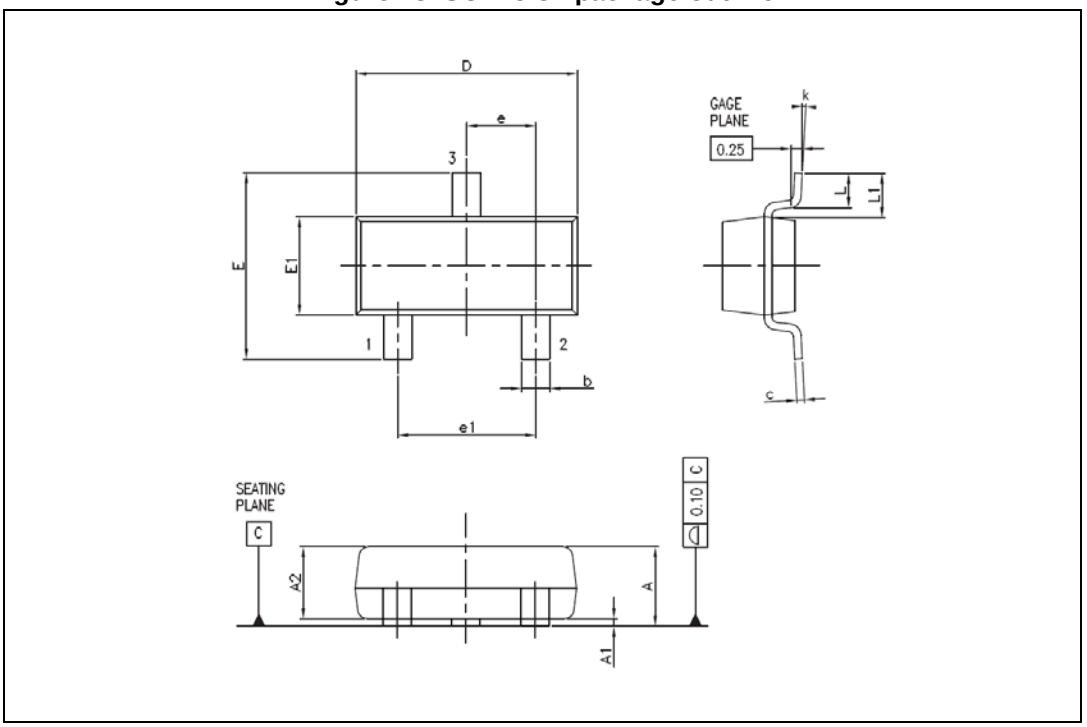

Table 10. SOT23-3L package mechanical data

Dimensions						
Ref.	Millimeters			Inches		
	Min.	Typ.	Max.	Min.	Typ.	Max.
A	0.89		1.12	0.035		0.044
A1	0.01		0.10	0.0004		0.004
A2	0.88	0.95	1.02	0.035	0.037	0.040
b	0.30		0.50	0.012		0.020
c	0.08		0.20	0.003		0.008
D	2.80	2.90	3.04	0.110	0.114	0.120
E	2.10		2.64	0.083		0.104
E1	1.20	1.30	1.40	0.047	0.051	0.055
e		0.95			0.037	
e1		1.90			0.075	
L	0.40	0.50	0.60	0.016	0.020	0.024
L1		0.54			0.021	
k	0d		8d			

5.5 SOT23-5L package information

Figure 29. SOT23-5L package outline

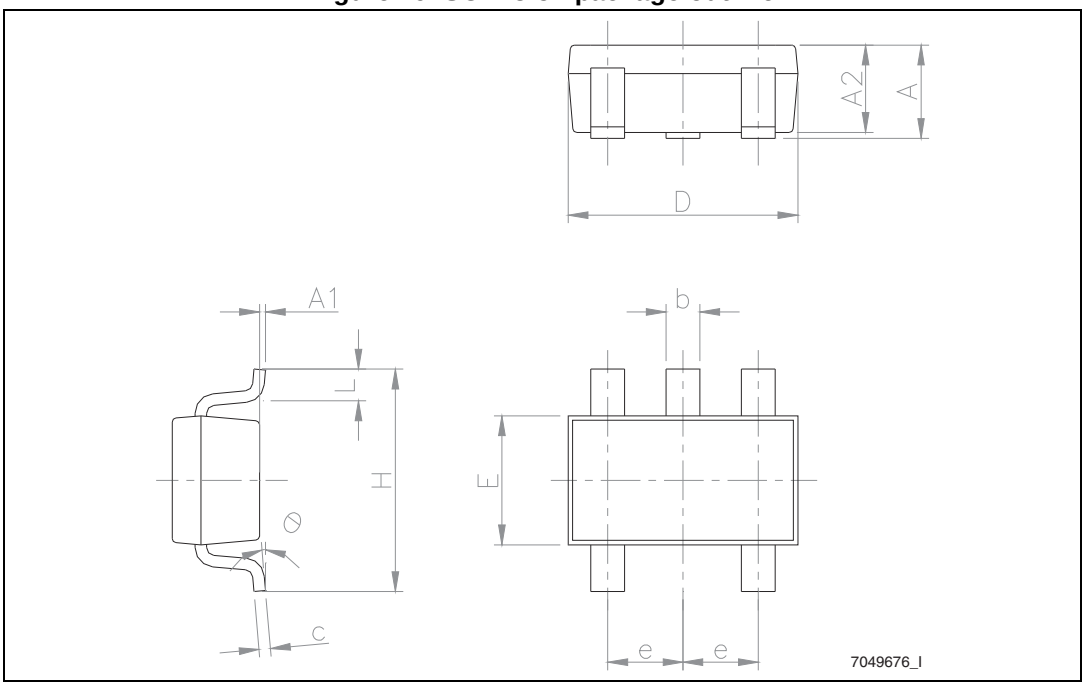

Table 11. SOT23-5L package mechanical data

Ref.	Dimensions					
	Millimeters			Inches		
	Min.	Typ.	Max.	Min.	Typ.	Max.
A	0.90		1.45	0.035		0.057
A1			0.15			0.006
A2	0.90		1.30	0.035		0.051
b	0.35		0.50	0.014		0.020
c	0.09		0.20	0.004		0.008
D	2.80		3.05	0.110		0.120
E	1.50		1.75	0.059		0.069
e		0.95			0.037	
H	2.60		3.00	0.102		0.118
L	0.10		0.60	0.004		0.024
θ	0 degrees		10 degrees			

5.6 SOT323-6L package information

Figure 30. SOT323-6L package outline

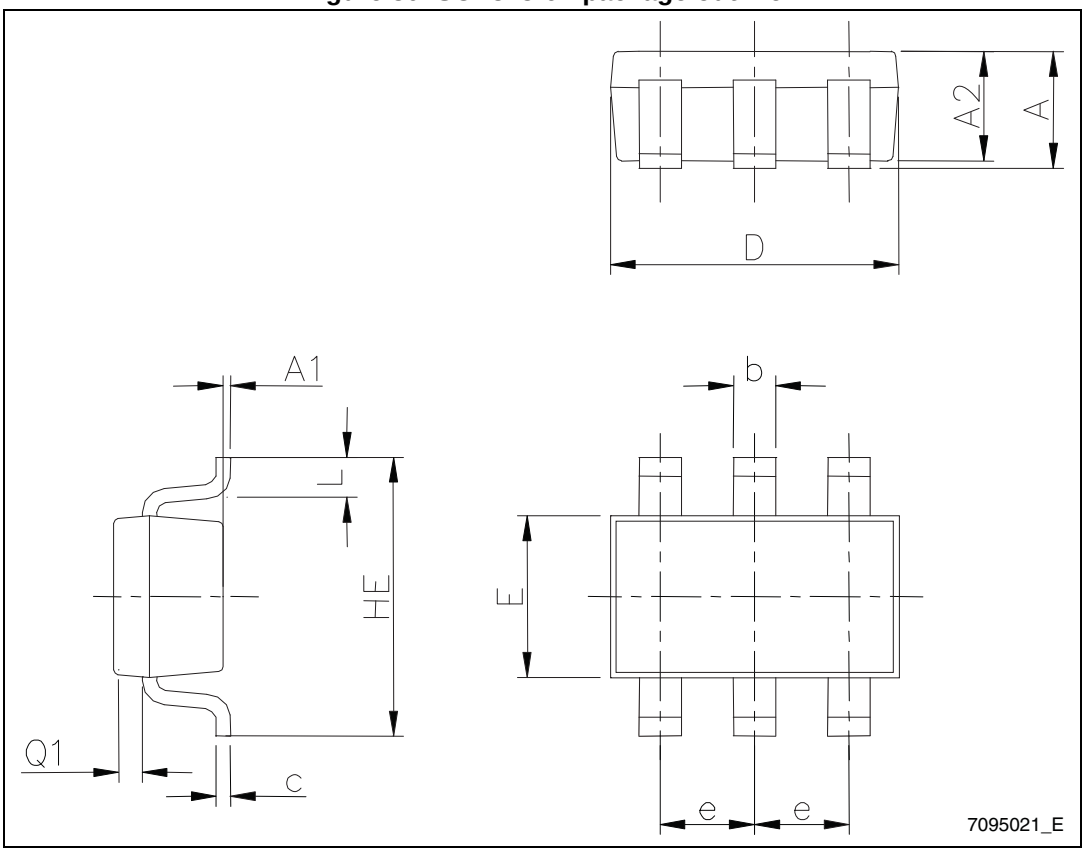

Table 12. SOT323-6L package mechanical data

Ref.	Dimensions					
	Millimeters			Inches		
	Min.	Typ.	Max.	Min.	Typ.	Max.
A	0.80		1.10	0.031		0.043
A1	0		0.10			0.004
A2	0.80		1.00	0.031		0.039
b	0.15		0.30	0.006		0.012
c	0.10		0.18	0.004		0.007
D	1.80		2.20	0.071		0.087
E	1.15		1.35	0.045		0.053
e		0.65			0.026	
HE	1.80		2.40	0.071		0.094
L	0.10		0.40	0.004		0.016
Q1	0.10		0.40	0.004		0.016

5.7 SO-8 packing information

Figure 31. SO-8 tape and reel outline

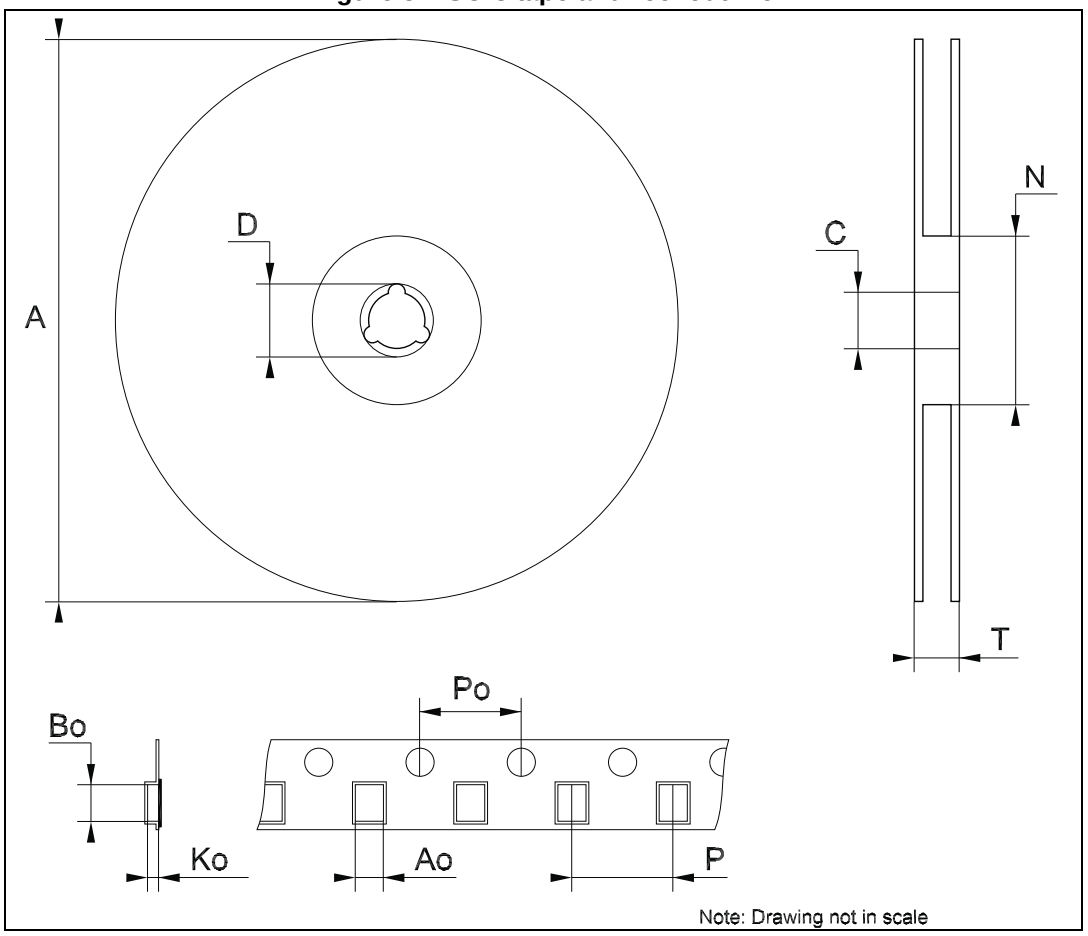

Table 13. SO-8 tape and reel mechanical data

Dim.	mm		
	Min.	Typ.	Max.
A		-	330
C	12.8	-	13.2
D	20.2	-	
N	60	-	
T		-	22.4
Ao	8.1	-	8.5
Bo	5.5	-	5.9
Ko	2.1	-	2.3
Po	3.9	-	4.1
P	7.9	-	8.1

5.8 SOT23-3L packing information

Figure 32. SOT23-3L tape outline (Carsem)

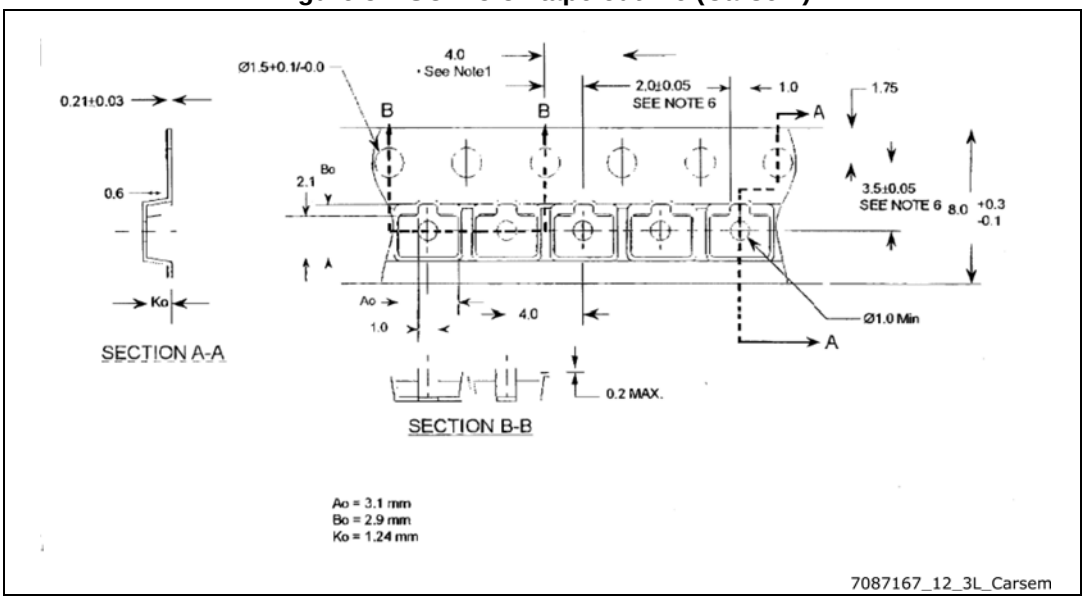

5.9 SOT23-5L packing information

Figure 33. SOT23-5L tape outline (Carsem)

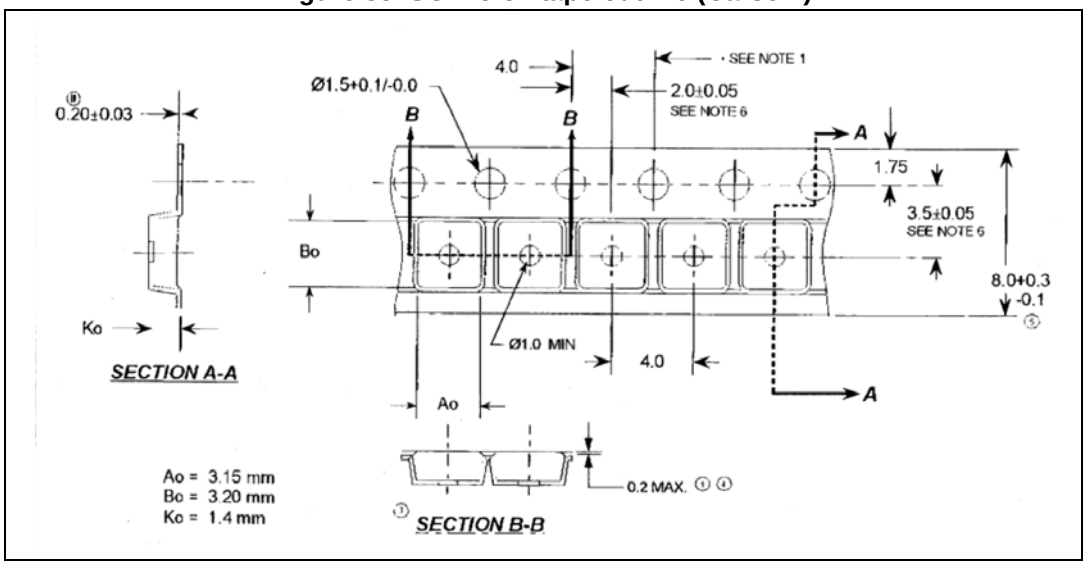

5.10 SOT323-6L packing information

Figure 34. SOT323-6L tape outline

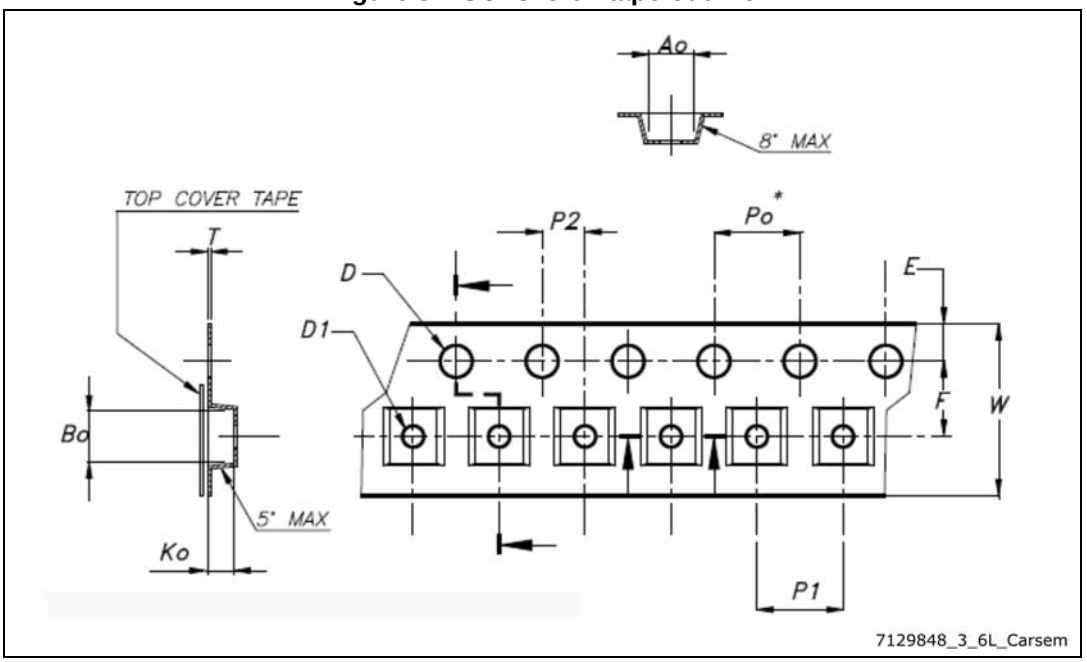

Table 14. SOT323-6L tape mechanical data

Dim.	Value
Ao	2.25 ±0.1
Bo	2.4 ±0.1
Ko	1.22 ±0.1
F	3.5 ±0.05
E	1.75 ±0.1
W	8 +0.3/ -0.1
P2	2 ±0.05
Po	4 ±0.1
P1	4 ±0.1
T	0.30 ±0.05
D	ϕ1.5 +0.1/0
D1	ϕ1 +0.25/0

6 Ordering information

Table 15. Order code

Order code	Accuracy (%)	Temperature range	Package	Packing	Marking
TL1431CD TL1431CDT	0.4	- 20 °C, +70 °C	SO-8	Tube or tape and reel	1431C
TL1431ACD TL1431ACDT	0.25				1431AC
TL1431CZ TL1431CZT TL1431CZ-AP	0.4		TO-92	Bulk or tape or Ammopack	TL1431C
TL1431ACZ TL1431ACZT TL1431ACZ-AP	0.25				TL1431AC
TL1431CL3T	0.4		SOT23-3L	Tape and reel	1C
TL1431ACL3T	0.25				1AC
TL1431CL5T	0.4		SOT23-5L		1C
TL1431ACL5T	0.25				1AC
TL1431CCT	0.4		SOT323-6L		14C
TL1431ACCT	0.25				
TL1431ID TL1431IDT	0.4	-40 °C, + 105 °C	SO-8	Tube or tape and reel	1431I
TL1431AID TL1431AIDT	0.25				1431AI
TL1431IZ TL1431IZT TL1431IZ-AP	0.4		TO-92	Bulk or tape or Ammopack	TL1431I
TL1431AIZ TL1431AIZT TL1431AIZ-AP	0.25				TL1431AI
TL1431IYDT (1)	0.4	-40 °C, + 125 °C	SO-8 (automotive grade)	Tape and reel	1431IY
TL1431AIYDT (1)	0.25				1431AIY

1. Qualification and characterization according to AEC Q100 and Q003 or equivalent, advanced screening according to AEC Q001 and Q 002 or equivalent.

7 Revision history

Table 16. Document revision history

Date	Revision	Changes
01-Mar-2002	1	Initial release.
01-Nov-2005	2	PPAP references inserted in the datasheet seeTable 13: Order code on page 25.
25-Apr-2007	3	Minimum value for temperature range updated in Table 2: Operating conditions. Minimum values added and maximum values deleted for $\frac{\Delta Vref}{\Delta Vka}$ parameter in Table 4 in Section 3: Electrical characteristics. Package information for TO92 tape and reel updated, see Section 5: Package information. Format update.
11-Mar-2008	4	Corrected SO-8 package mechanical data. Corrected footnote for automotive grade order codes in order code table. Corrected packing information for TO92 devices in order code table.
11-Sep-2012	5	Added: feature Automotive temp. range - 40 °C to +125 °C on page 1. Updated: Table 14 on page 25.
01-Oct-2014	6	Updated Section 5: Package information. Minor text changes.
20-Nov-2015	7	Added SOT23-3L, SOT23-5L and SOT323-6L packages. Updated *Section 1: Schematic diagrams*, *Section 2: Absolute maximum ratings and operating conditions*, *Section 5: Package information* and *Section 6: Ordering information*. Minor text changes.
30-Aug-2017	8	Added Table 3: Thermal data. Minor text changes.
06-Dec-2017	9	Updated title on the cover page.

IMPORTANT NOTICE – PLEASE READ CAREFULLY

STMicroelectronics NV and its subsidiaries (“ST”) reserve the right to make changes, corrections, enhancements, modifications, and improvements to ST products and/or to this document at any time without notice. Purchasers should obtain the latest relevant information on ST products before placing orders. ST products are sold pursuant to ST’s terms and conditions of sale in place at the time of order acknowledgement.

Purchasers are solely responsible for the choice, selection, and use of ST products and ST assumes no liability for application assistance or the design of Purchasers’ products.

No license, express or implied, to any intellectual property right is granted by ST herein.

Resale of ST products with provisions different from the information set forth herein shall void any warranty granted by ST for such product.

ST and the ST logo are trademarks of ST. All other product or service names are the property of their respective owners.

Information in this document supersedes and replaces information previously supplied in any prior versions of this document.

© 2017 STMicroelectronics – All rights reserved