- **Fully Matches Parameters for SCSI Alternative 2 Active Termination**
- **Fixed 2.85-V Output**
- **±1% Maximum Output Tolerance at T_J = 25°C**
- **0.7-V Maximum Dropout Voltage**
- **620-mA Output Current**
- **±2% Absolute Output Variation**
- **Internal Overcurrent-Limiting Circuitry**
- **Internal Thermal-Overload Protection**
- **Internal Overvoltage Protection**

PW PACKAGE
(TOP VIEW)

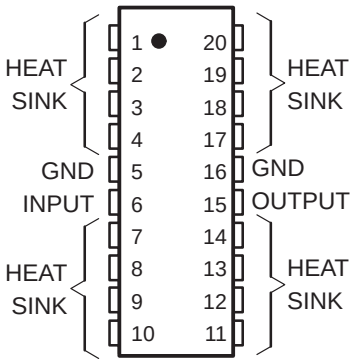

HEAT SINK – These terminals have an internal resistive connection to ground and should be grounded or electrically isolated.

KC PACKAGE
(TOP VIEW)

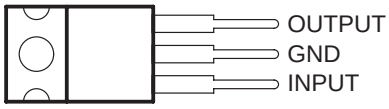

The GND terminal is in electrical contact with the mounting base.

description

The TL-SCSI285 is a low-dropout (0.7-V) fixed-voltage regulator specifically designed for small computer systems interface (SCSI) alternative 2 active signal termination. The TL-SCSI285 0.7-V maximum dropout ensures compatibility with existing SCSI systems, while providing a wide TERMPWR voltage range. At the same time, the ±1% initial tolerance on its 2.85-V output voltage ensures a tighter line-driver current tolerance, thereby increasing the system noise margin.

The fixed 2.85-V output voltage of the TL-SCSI285 supports the SCSI alternative 2 termination standard, while reducing system power consumption. The 0.7-V maximum dropout voltage brings increased TERMPWR isolation, making the device ideal for battery-powered systems. The TL-SCSI285, with internal current limiting, overvoltage protection, ESD protection, and thermal protection, offers designers enhanced system protection and reliability.

When configured as a SCSI active terminator, the TL-SCSI285 low-dropout regulator eliminates the 220-Ω and the 330-Ω resistors required for each transmission line with a passive termination scheme, reducing significantly the continuous system power drain. When placed in series with 110-Ω resistors, the device matches the impedance level of the transmission cable and eliminates reflections.

The TL-SCSI285 is characterized for operation over the virtual junction temperature range of 0°C to 125°C.

AVAILABLE OPTIONS

T_J	PACKAGED DEVICES		CHIP FORM (Y)
	PLASTIC POWER (KC)	SURFACE MOUNT (PW)	
0°C to 125°C	TL-SCSI285KC	TL-SCSI285PWR	TL-SCSI285Y

The PW package is only available taped and reeled. Chip forms are tested at 25°C.



Please be aware that an important notice concerning availability, standard warranty, and use in critical applications of Texas Instruments semiconductor products and disclaimers thereto appears at the end of this data sheet.

PRODUCTION DATA information is current as of publication date. Products conform to specifications per the terms of Texas Instruments standard warranty. Production processing does not necessarily include testing of all parameters.

Copyright © 1999, Texas Instruments Incorporated

absolute maximum ratings over operating virtual junction temperature range (unless otherwise noted)†

Continuous input voltage, V_I . . . . . 7.5 V
Operating virtual junction temperature range, T_J . . . . . –55°C to 150°C
Package thermal impedance, θ_{JA} (see Notes 1 and 2): KC package . . . . . 22°C/W
PW package . . . . . 83°C/W
Lead temperature 1,6 mm (1/16 inch) from case for 60 seconds: KC or PW package . . . . . 260°C
Storage temperature range, T_{stg} . . . . . –65°C to 150°C

† Stresses beyond those listed under "absolute maximum ratings" may cause permanent damage to the device. These are stress ratings only, and functional operation of the device at these or any other conditions beyond those indicated under "recommended operating conditions" is not implied. Exposure to absolute-maximum-rated conditions for extended periods may affect device reliability.

NOTES: 1. Maximum power dissipation is a function of $T_J(max)$, θ_{JA}, and T_A. The maximum allowable power dissipation at any allowable ambient temperature is $P_D = (T_J(max) – T_A)/\theta_{JA}$. Operating at the absolute maximum T_J of 150°C can impact reliability. Due to variations in individual device electrical characteristics and thermal resistance, the built-in thermal overload protection may be activated at power levels slightly above or below the rated dissipation.
2. The package thermal impedance is calculated in accordance with JESD 51, except for through-hole packages, which use a trace length of zero.

recommended operating conditions

		TL-SCSI285		UNIT
		MIN	MAX	
Input voltage, V_I	T_J = 25°C			V
Input voltage, V_I	T_J = 0°C to 125°C	3.55	5.5	V
Output current, I_O	KC package	0	620	mA
	PW package	0	500	
Operating virtual junction temperature range, T_J		0	125	°C

electrical characteristics, V_I = 4.5 V, I_O = 500 mA, T_J = 25°C (unless otherwise noted)

PARAMETER	TEST CONDITIONS‡			TL-SCSI285KC			UNIT
				MIN	TYP	MAX	
Output voltage	I_O = 20 mA to 500 mA,	V_I = 3.55 V to 5.5 V,	T_J = 25°C	2.82	2.85	2.88	V
	I_O = 500 mA to 620 mA,	V_I = 3.65 V to 5.5 V,	T_J = 0 to 125°C	2.79		2.91	
Input regulation	V_I = 3.55 V to 5.5 V				5	15	mV
Ripple rejection	f = 120 Hz,	V_{ripple} = 1 $V_{O(PP)}$			–62		dB
Output regulation	I_O = 20 mA to 620 mA				5	30	mV
	I_O = 20 mA to 500 mA				5	30	
Output noise voltage	f = 10 Hz to 100 kHz				500		μV
Dropout voltage	I_O = 500 mA					0.7	V
	I_O = 620 mA					0.8	
Bias current	I_O = 0				2	5	mA
	I_O = 27 mA, equivalent 1 line asserted				3	6	
	I_O = 500 mA, equivalent 18 lines asserted (8-bit)				26	49	
	I_O = 620 mA				37	62	

‡ Pulse-testing techniques are used to maintain the virtual junction temperature as close to the ambient temperature as possible. Thermal effects must be taken into account separately. All characteristics are measured with a 0.1-μF capacitor across the input and a 22.0-μF tantalum capacitor with equivalent series resistance of 1.5 Ω on the output.

electrical characteristics, V_I = 4.5 V, I_O = 500 mA, T_J = 25°C (unless otherwise noted)

PARAMETER	TEST CONDITIONS†		TL-SCSI285PW			UNIT
			MIN	TYP	MAX	
Output voltage	I_O = 20 mA to 500 mA, V_I = 3.55 V to 5.5 V	T_J = 25°C	2.82	2.85	2.88	V
		T_J = 0 to 125°C	2.79		2.91	
Input regulation	V_I = 3.55 V to 5.5 V			5	15	mV
Ripple rejection	f = 120 Hz, V_{ripple} = 1 $V_{O(PP)}$			–62		dB
Output regulation	I_O = 20 mA to 500 mA			5	30	mV
Output noise voltage	f = 10 Hz to 100 kHz			500		μV
Dropout voltage	I_O = 500 mA				0.7	V
Bias current	I_O = 0			2	5	mA
	I_O = 27 mA, equivalent 1 line asserted			3	6	
	I_O = 500 mA, equivalent 18 lines asserted (8-bit)			26	49	

† Pulse-testing techniques are used to maintain the virtual junction temperature as close to the ambient temperature as possible. Thermal effects must be taken into account separately. All characteristics are measured with a 0.1-μF capacitor across the input and a 22.0-μF tantalum capacitor with equivalent series resistance of 1.5 Ω on the output.

electrical characteristics, V_I = 4.5 V, I_O = 500 mA, T_J = 25°C

PARAMETER	TEST CONDITIONS†	TL-SCSI285Y			UNIT
		MIN	TYP	MAX	
Output voltage	I_O = 20 mA to 500 mA, V_I = 3.55 V to 5.5 V		2.85		V
Input regulation	V_I = 3.55 V to 5.5 V		5		mV
Ripple rejection	f = 120 Hz, V_{ripple} = 1 $V_{O(PP)}$		–62		dB
Output regulation	I_O = 20 mA to 620 mA		5		mV
	I_O = 20 mA to 500 mA		5		
Output noise voltage	f = 10 Hz to 100 kHz		500		μV
Bias current	I_O = 0		2		mA
	I_O = 27 mA, equivalent 1 line asserted		3		
	I_O = 500 mA, equivalent 18 lines asserted (8-bit)		26		
	I_O = 620 mA		37		

† Pulse-testing techniques are used to maintain the virtual junction temperature as close to the ambient temperature as possible. Thermal effects must be taken into account separately. All characteristics are measured with a 0.1-μF capacitor across the input and a 22.0-μF tantalum capacitor with equivalent series resistance of 1.5 Ω on the output.

APPLICATION INFORMATION

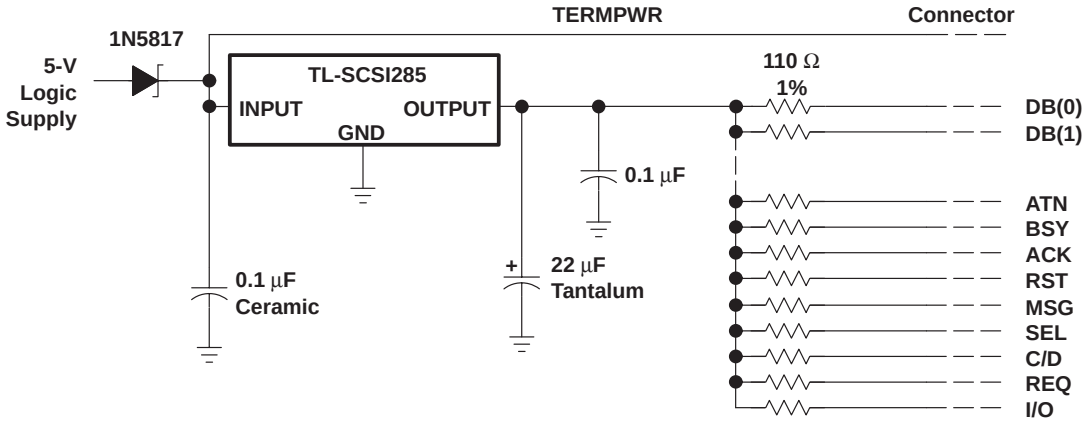

Figure 1. Typical Application Schematic

COMPENSATION CAPACITOR SELECTION INFORMATION

The TL-SCSI285 is a low-dropout regulator. This means that the capacitance loading is important to the performance of the regulator because it is a vital part of the control loop. The capacitor value and the equivalent series resistance (ESR) both affect the control loop and must be defined for the load range and the temperature range. Figures 2 and 3 can be used to establish the capacitance value and ESR range for best regulator performance.

ESR OF OUTPUT CAPACITOR
vs
LOAD CURRENT

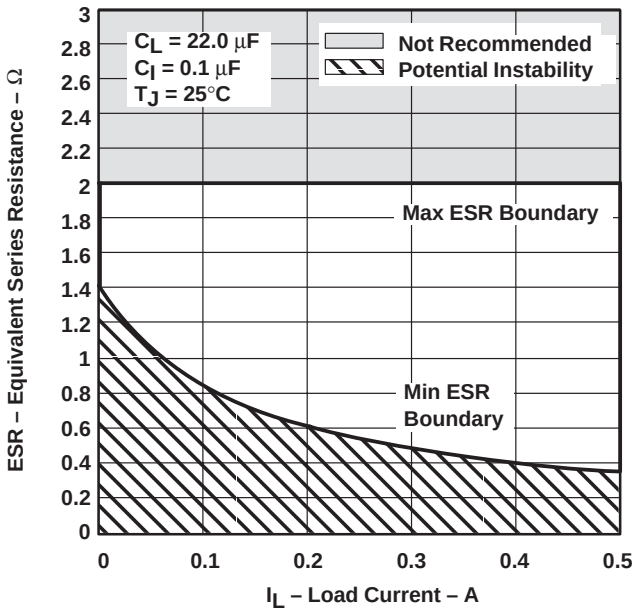

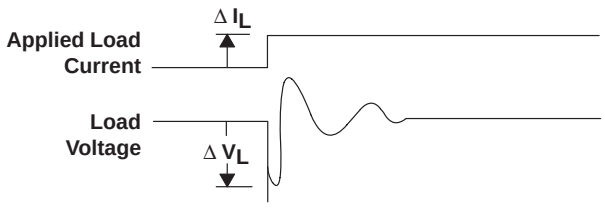

Figure 2

STABILITY
vs
ESR

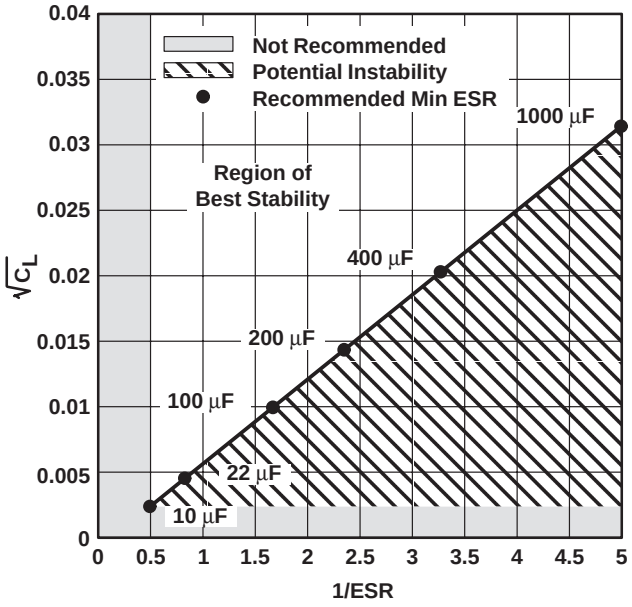

Figure 3

PACKAGING INFORMATION

Orderable Device	Status (1)	Package Type	Package Drawing	Pins	Package Qty	Eco Plan (2)	Lead/Ball Finish	MSL Peak Temp (3)
TL-SCSI285KC	NRND	TO-220	KC	3	50	Pb-Free (RoHS)	CU SN	N / A for Pkg Type
TL-SCSI285KCE3	NRND	TO-220	KC	3	50	Pb-Free (RoHS)	CU SN	N / A for Pkg Type
TL-SCSI285KCSE3	ACTIVE	TO-220	KCS	3	50	Pb-Free (RoHS)	CU SN	N / A for Pkg Type
TL-SCSI285PWR	ACTIVE	TSSOP	PW	20	2000	Green (RoHS & no Sb/Br)	CU NIPD	Level-1-260C-UNLIM
TL-SCSI285PWRE4	ACTIVE	TSSOP	PW	20	2000	Green (RoHS & no Sb/Br)	CU NIPD	Level-1-260C-UNLIM
TL-SCSI285PWRG4	ACTIVE	TSSOP	PW	20	2000	Green (RoHS & no Sb/Br)	CU NIPD	Level-1-260C-UNLIM

(1) The marketing status values are defined as follows:
ACTIVE: Product device recommended for new designs.
LIFEBUY: TI has announced that the device will be discontinued, and a lifetime-buy period is in effect.
NRND: Not recommended for new designs. Device is in production to support existing customers, but TI does not recommend using this part in a new design.
PREVIEW: Device has been announced but is not in production. Samples may or may not be available.
OBSOLETE: TI has discontinued the production of the device.

(2) Eco Plan - The planned eco-friendly classification: Pb-Free (RoHS), Pb-Free (RoHS Exempt), or Green (RoHS & no Sb/Br) - please check http://www.ti.com/productcontent for the latest availability information and additional product content details.
TBD: The Pb-Free/Green conversion plan has not been defined.
Pb-Free (RoHS): TI's terms "Lead-Free" or "Pb-Free" mean semiconductor products that are compatible with the current RoHS requirements for all 6 substances, including the requirement that lead not exceed 0.1% by weight in homogeneous materials. Where designed to be soldered at high temperatures, TI Pb-Free products are suitable for use in specified lead-free processes.
Pb-Free (RoHS Exempt): This component has a RoHS exemption for either 1) lead-based flip-chip solder bumps used between the die and package, or 2) lead-based die adhesive used between the die and leadframe. The component is otherwise considered Pb-Free (RoHS compatible) as defined above.
Green (RoHS & no Sb/Br): TI defines "Green" to mean Pb-Free (RoHS compatible), and free of Bromine (Br) and Antimony (Sb) based flame retardants (Br or Sb do not exceed 0.1% by weight in homogeneous material)

(3) MSL, Peak Temp. -- The Moisture Sensitivity Level rating according to the JEDEC industry standard classifications, and peak solder temperature.

Important Information and Disclaimer: The information provided on this page represents TI's knowledge and belief as of the date that it is provided. TI bases its knowledge and belief on information provided by third parties, and makes no representation or warranty as to the accuracy of such information. Efforts are underway to better integrate information from third parties. TI has taken and continues to take reasonable steps to provide representative and accurate information but may not have conducted destructive testing or chemical analysis on incoming materials and chemicals. TI and TI suppliers consider certain information to be proprietary, and thus CAS numbers and other limited information may not be available for release.

In no event shall TI's liability arising out of such information exceed the total purchase price of the TI part(s) at issue in this document sold by TI to Customer on an annual basis.

TAPE AND REEL BOX INFORMATION

REEL DIMENSIONS

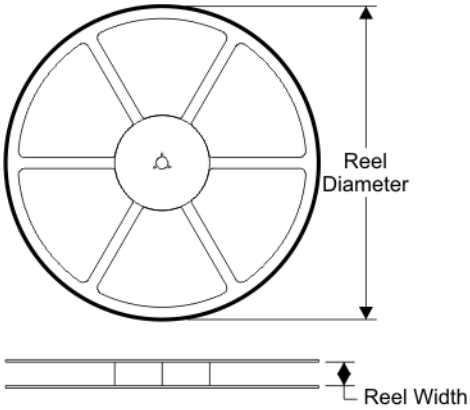

TAPE DIMENSIONS

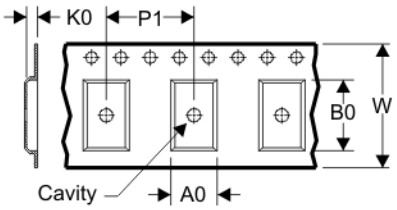

A0	Dimension designed to accommodate the component width
B0	Dimension designed to accommodate the component length
K0	Dimension designed to accommodate the component thickness
W	Overall width of the carrier tape
P1	Pitch between successive cavity centers

QUADRANT ASSIGNMENTS FOR PIN 1 ORIENTATION IN TAPE

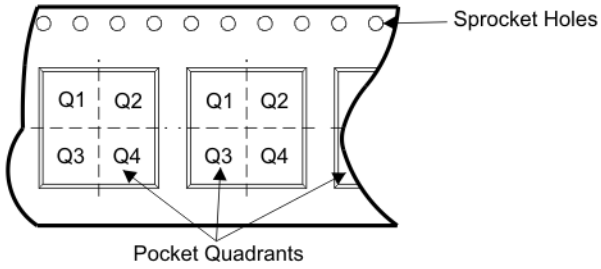

Device	Package	Pins	Site	Reel Diameter (mm)	Reel Width (mm)	A0 (mm)	B0 (mm)	K0 (mm)	P1 (mm)	W (mm)	Pin1 Quadrant
TL-SCSI285PWR	PW	20	SITE 41	330	16	6.95	7.1	1.6	8	16	Q1

TAPE AND REEL BOX DIMENSIONS

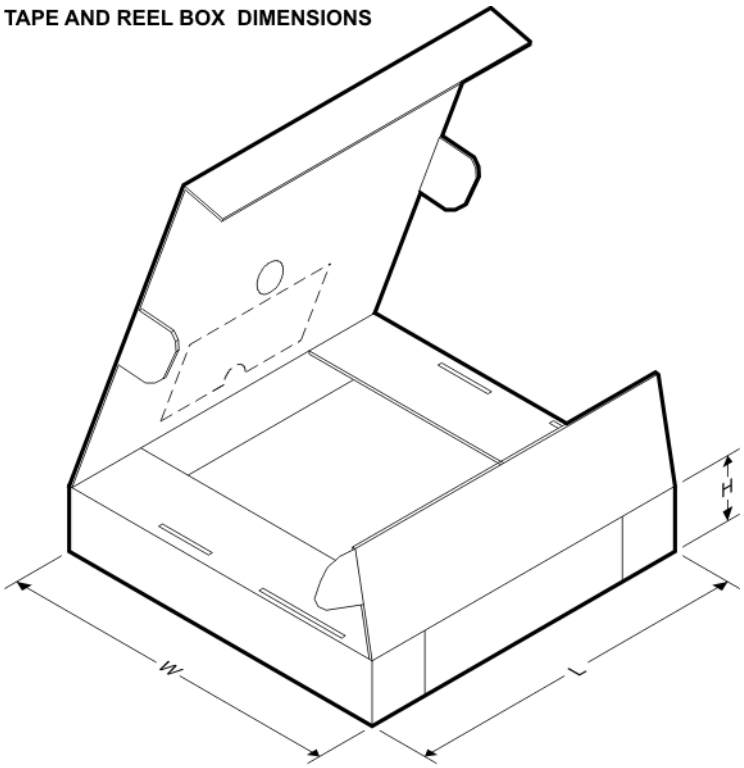

Device	Package	Pins	Site	Length (mm)	Width (mm)	Height (mm)
TL-SCSI285PWR	PW	20	SITE 41	346.0	346.0	33.0

KCS (R–PSFM–T3) PLASTIC FLANGE–MOUNT PACKAGE

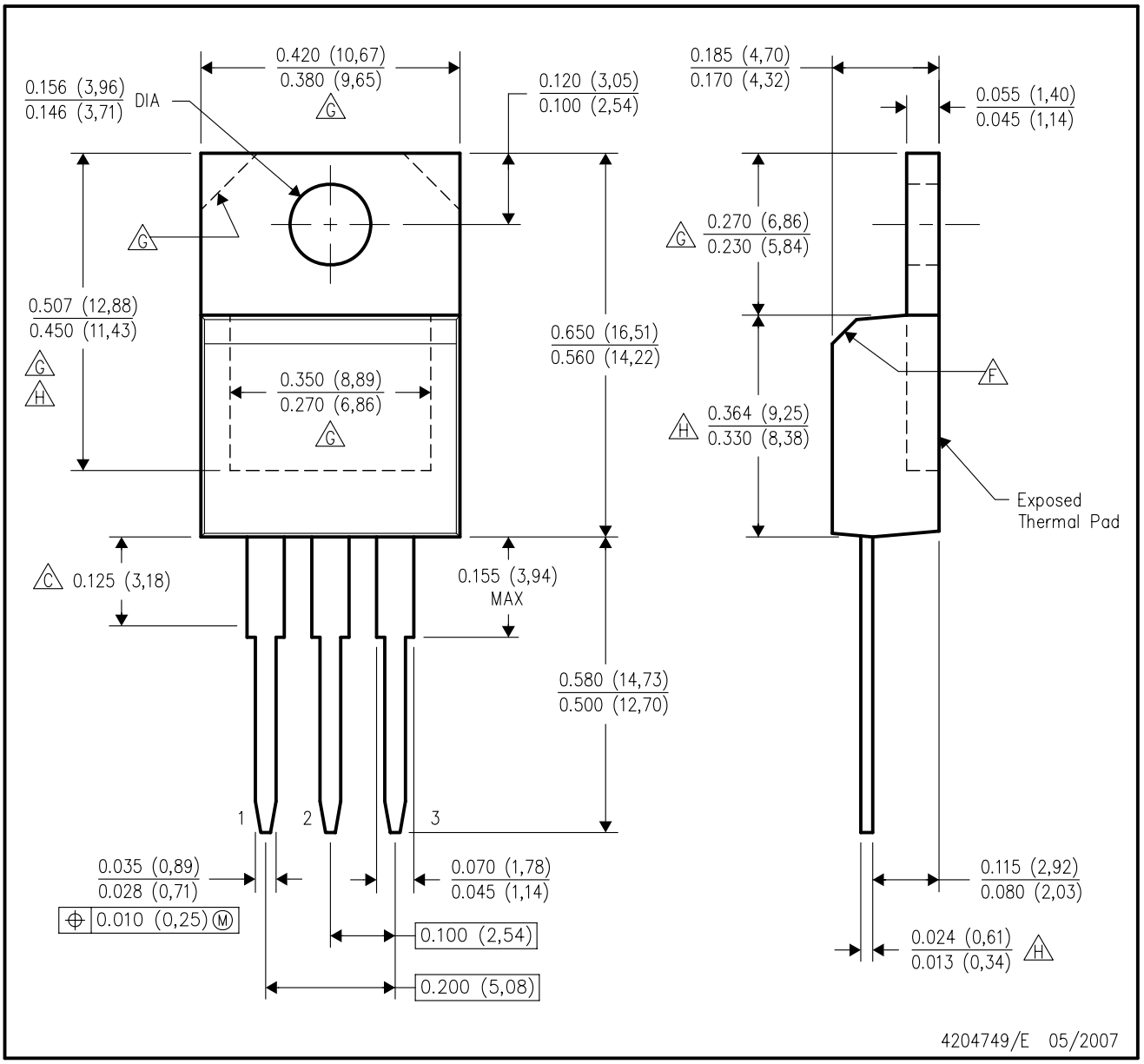

NOTES:
A. All linear dimensions are in inches (millimeters).
B. This drawing is subject to change without notice.
C. Lead dimensions are not controlled within this area.
D. All lead dimensions apply before solder dip.
E. The center lead is in electrical contact with the mounting tab.
F. The chamfer is optional.
G. Thermal pad contour optional within these dimensions.
H. Falls within JEDEC TO–220 variation AB, except minimum lead thickness, minimum exposed pad length, and maximum body length.

KC (R–PSFM–T3) PLASTIC FLANGE–MOUNT PACKAGE

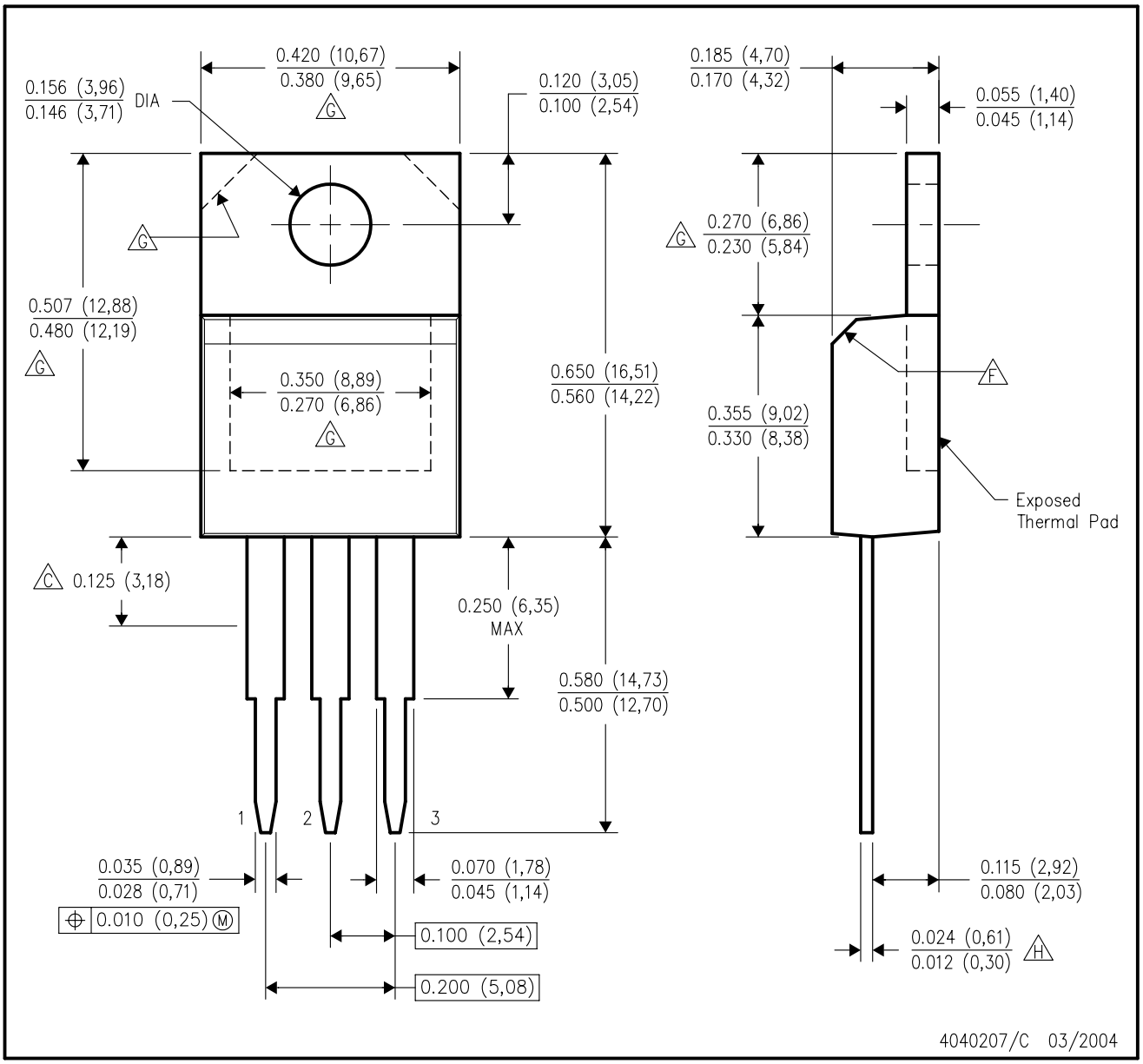

NOTES:
- A. All linear dimensions are in inches (millimeters).
- B. This drawing is subject to change without notice.
- C. Lead dimensions are not controlled within this area.
- D. All lead dimensions apply before solder dip.
- E. The center lead is in electrical contact with the mounting tab.
- F. The chamfer is optional.
- G. Thermal pad contour optional within these dimensions.
- H. Falls within JEDEC TO–220 variation AB, except minimum lead thickness.

PW (R-PDSO-G)** **PLASTIC SMALL-OUTLINE PACKAGE**

14 PINS SHOWN

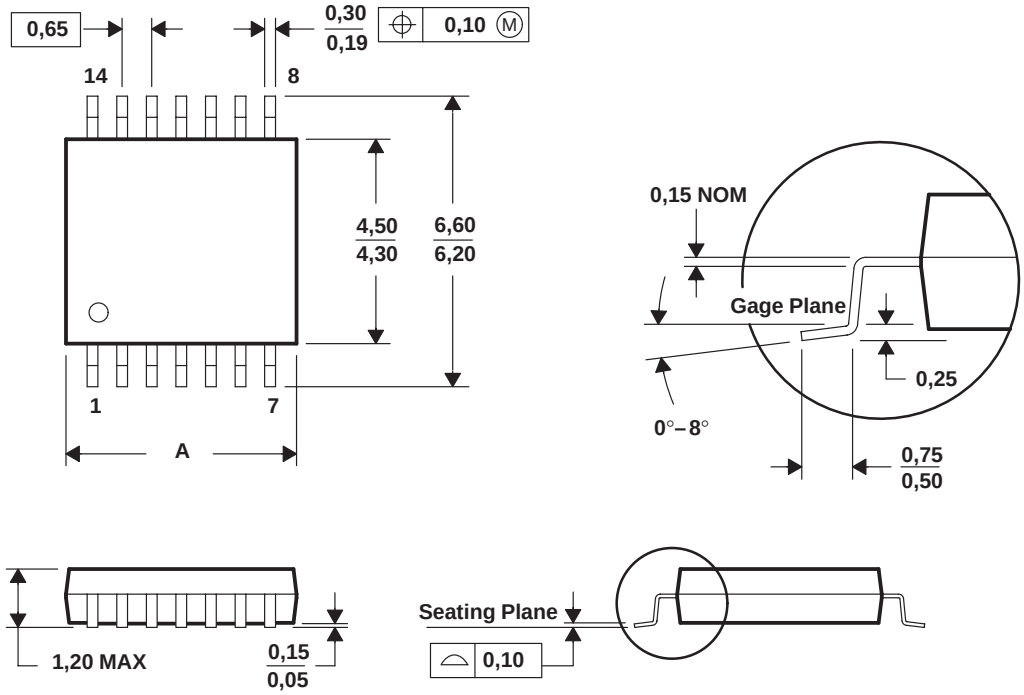

DIM \ PINS **	8	14	16	20	24	28
A MAX	3,10	5,10	5,10	6,60	7,90	9,80
A MIN	2,90	4,90	4,90	6,40	7,70	9,60

4040064/F 01/97

NOTES: A. All linear dimensions are in millimeters.
B. This drawing is subject to change without notice.
C. Body dimensions do not include mold flash or protrusion not to exceed 0,15.
D. Falls within JEDEC MO-153

IMPORTANT NOTICE

Texas Instruments Incorporated and its subsidiaries (TI) reserve the right to make corrections, modifications, enhancements, improvements, and other changes to its products and services at any time and to discontinue any product or service without notice. Customers should obtain the latest relevant information before placing orders and should verify that such information is current and complete. All products are sold subject to TI's terms and conditions of sale supplied at the time of order acknowledgment.

TI warrants performance of its hardware products to the specifications applicable at the time of sale in accordance with TI's standard warranty. Testing and other quality control techniques are used to the extent TI deems necessary to support this warranty. Except where mandated by government requirements, testing of all parameters of each product is not necessarily performed.

TI assumes no liability for applications assistance or customer product design. Customers are responsible for their products and applications using TI components. To minimize the risks associated with customer products and applications, customers should provide adequate design and operating safeguards.

TI does not warrant or represent that any license, either express or implied, is granted under any TI patent right, copyright, mask work right, or other TI intellectual property right relating to any combination, machine, or process in which TI products or services are used. Information published by TI regarding third-party products or services does not constitute a license from TI to use such products or services or a warranty or endorsement thereof. Use of such information may require a license from a third party under the patents or other intellectual property of the third party, or a license from TI under the patents or other intellectual property of TI.

Reproduction of TI information in TI data books or data sheets is permissible only if reproduction is without alteration and is accompanied by all associated warranties, conditions, limitations, and notices. Reproduction of this information with alteration is an unfair and deceptive business practice. TI is not responsible or liable for such altered documentation. Information of third parties may be subject to additional restrictions.

Resale of TI products or services with statements different from or beyond the parameters stated by TI for that product or service voids all express and any implied warranties for the associated TI product or service and is an unfair and deceptive business practice. TI is not responsible or liable for any such statements.

TI products are not authorized for use in safety-critical applications (such as life support) where a failure of the TI product would reasonably be expected to cause severe personal injury or death, unless officers of the parties have executed an agreement specifically governing such use. Buyers represent that they have all necessary expertise in the safety and regulatory ramifications of their applications, and acknowledge and agree that they are solely responsible for all legal, regulatory and safety-related requirements concerning their products and any use of TI products in such safety-critical applications, notwithstanding any applications-related information or support that may be provided by TI. Further, Buyers must fully indemnify TI and its representatives against any damages arising out of the use of TI products in such safety-critical applications.

TI products are neither designed nor intended for use in military/aerospace applications or environments unless the TI products are specifically designated by TI as military-grade or "enhanced plastic." Only products designated by TI as military-grade meet military specifications. Buyers acknowledge and agree that any such use of TI products which TI has not designated as military-grade is solely at the Buyer's risk, and that they are solely responsible for compliance with all legal and regulatory requirements in connection with such use.

TI products are neither designed nor intended for use in automotive applications or environments unless the specific TI products are designated by TI as compliant with ISO/TS 16949 requirements. Buyers acknowledge and agree that, if they use any non-designated products in automotive applications, TI will not be responsible for any failure to meet such requirements.

Following are URLs where you can obtain information on other Texas Instruments products and application solutions:

Products		**Applications**	
Amplifiers	amplifier.ti.com	Audio	www.ti.com/audio
Data Converters	dataconverter.ti.com	Automotive	www.ti.com/automotive
DSP	dsp.ti.com	Broadband	www.ti.com/broadband
Interface	interface.ti.com	Digital Control	www.ti.com/digitalcontrol
Logic	logic.ti.com	Military	www.ti.com/military
Power Mgmt	power.ti.com	Optical Networking	www.ti.com/opticalnetwork
Microcontrollers	microcontroller.ti.com	Security	www.ti.com/security
RFID	www.ti-rfid.com	Telephony	www.ti.com/telephony
Low Power Wireless	www.ti.com/lpw	Video & Imaging	www.ti.com/video
		Wireless	www.ti.com/wireless

Mailing Address: Texas Instruments, Post Office Box 655303, Dallas, Texas 75265
Copyright © 2007, Texas Instruments Incorporated