STEP-UP VOLTAGE CONVERTER WITH VOLTAGE MONITOR

FEATURES

- **0.9 V Operation**
- **Very Low Quiescent Current**
- **Internal Bandgap Reference**
- **High Efficiency**
- **Low Output Ripple**
- **Microprocessor Reset Output**
- **Laser-Trimmed Output Voltage**
- **Undervoltage Lockout**
- **Regulation by Pulse Burst Modulation (PBM)**

APPLICATIONS

- **Battery Powered Systems**
- **Cellular Telephones**
- **Pagers**
- **Personal Communications Equipment**
- **Portable Instrumentation**
- **Portable Consumer Equipment**
- **Radio Control Systems**

DESCRIPTION

The TK65015 Low Power Step-Up DC-DC converter is designed for portable battery powered systems, capable of operating from a single battery cell down to 0.9 V.

The output voltage is laser-trimmed to 3.0 V. An internal detector monitors the output voltage and provides an active-low microprocessor reset signal whenever the output voltage falls below an internally preset limit. An internal undervoltage lockout circuit is utilized to prevent the inductor switch from remaining in the "ON" mode when the battery voltage is too low to permit normal operation.

Special care has been taken to achieve high reliability through the use of Oxide, Nitride passivation and an additional polyimide coating. The TK65015 is available in a very small plastic surface mount package. (SOT-23L)

Pulse burst modulation (PBM) is used to regulate the voltage at the V_{OUT} pin at the IC. PBM is the process in which an oscillator signal is gated or not gated to the switch drive each period. The decision is made just before the start of each cycle and is based on comparing the output voltage to an internally-generated bandgap reference. The decision is latched, so the duty ratio is not modulated within a cycle. The average duty ratio is effectively modulated by the "bursting" and skipping of pulses which can be seen at the IND pin of the IC.

The TK65015 provides the power switch and the control circuit for a boost converter. The converter takes a DC input (typically a single battery cell) and boosts it up to 3 volts. This regulated 3 volt output is typically used to supply power to a microprocessor-controlled system.

TK65015M

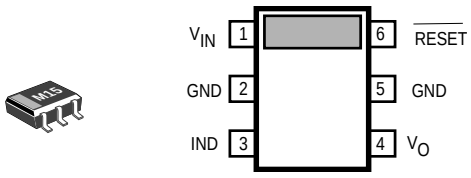

BLOCK DIAGRAM

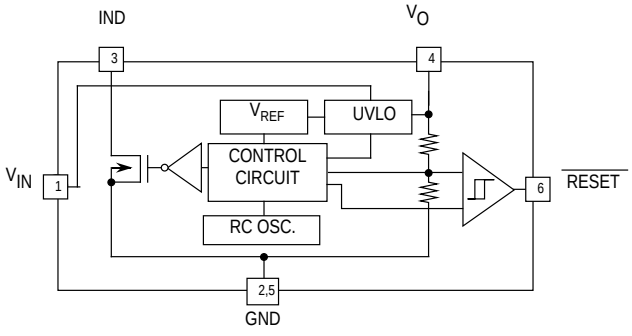

ORDERING INFORMATION

TK65015M □□

Tape/Reel Code

TAPE/REEL CODE
BX : Bulk/Bag
TL : Tape Left

ABSOLUTE MAXIMUM RATINGS

All pins except GND ..... 6 V
Power Dissipation (Note1) ..... 400 mW
Storage Temperature Range ..... -55 to +150 °C
Operating Temp. Range .....-10 to + 50 °C
Lead Soldering Temperature (10 s) ..... 240 °C
Junction Temperature ..... 150 °C

ELECTRICAL CHARACTERISTICS

Over operating temperature range, unless otherwise specified.

VARIABLE	PARAMETER	TEST CONDITION	MIN	TYP	MAX	UNIT
V_{IN}	Supply Voltage range		0.90		1.60	V
V_{UVL}	Undervoltage lockout threshold	T_A = 25 °C		.74		V
I (V_{IN})	Quiescent current into V_{IN} pin	V_{IN} = 1.3 V		20	35	µA
I (V_{OUT})	Quiescent current into V_{OUT} pin	V_{OUT} = $V_{OUT\ (REG)}$ +20 mV		22	34	µA
$f_{(OSC)}$	Internal oscillator frequency	V_{IN} = 0.9 V & V_{IN} = 1.6 V	70	83	102	kHz
	Temperature stability of oscillator	V_{IN} = 1.3 V		800		ppm/°C
$D_{(OSC)}$	On-time duty ratio of oscillator	V_{IN} = 0.9V & V_{IN} = 1.6 V	36	50	64	%
$V_{OUT(REG)}$	Regulation threshold of V_{OUT}	V_{IN} = 0.9 V & V_{IN} = 1.6 V	2.85	3.00	3.10	V
	Temperature stability of $V_{OUT(REG)}$	V_{IN} = 1.3 V		250		ppm/°C
$\Delta V_{OUT(LINE)}$	Line regulation of $V_{OUT(REG)}$	V_{IN} = 0.9 V & V_{IN} = 1.6 V	-20	0	20	mV
$\Delta V_{O\ (LOAD)}$	Load regulation of $V_{OUT(REG)}$ (Note 2)	0mA < I_O < 4mA		0		mV
$V_{OUT(RST)}$	V_{OUT} during reset transition		2.48		2.70	V
$\Delta V_{OUT(RST)}$	$V_{OUT(RST)}$ threshold hysteresis			45		mV
$V_{RST(HI)}$	Logic High of $\overline{\text{RESET}}$ w/r/t V_{OUT}	300 kΩ Pullup	-100			mV
$V_{RST(LO)}$	Logic Low of $\overline{\text{RESET}}$	300 kΩ Pullup			100	mV
$R_{SW(ON)}$	On-resistance of switch, IND pin	V_{OUT} = $V_{OUT(REG)}$		0.5		ohms
$I_{I(Q)}$	Quiescent current of converter (Note 5)	V_I = 1.3 V, I_O = 0mA		80	120	µA
$I_{O(MAX)}$	Maximum I_O for converter (Notes 3,5)	V_I ≥ 1.1 V, V_O Regulated	4			mA
η	Converter efficiency (Notes 4,5)	V_I = 1.3 V, I_O = 4 mA		74		%

TEST CIRCUIT

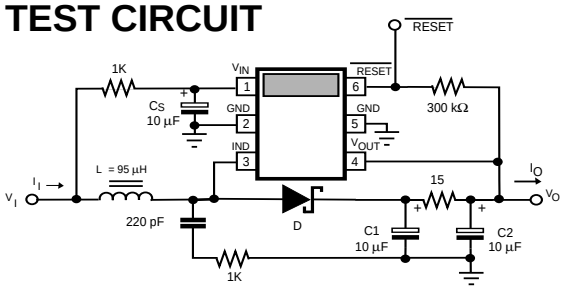

Inductor L: Toko A682AE-014=P3 or equivalent
Diode D: LL103A or equivalent

Note 1: Derate at 0.8 mW/°C for operation above T_A = 25 °C ambient temperature, when heat conducting copper foil path is maximized on the printed circuit board. When this is not possible, a derating factor of 1.6 mW/ °C must be used.
Note 2: The output regulation threshold, $V_{OUT(REG)}$, is guaranteed-by-design to be independent of the load. Regulation will occur provided that the load current is within the capability of the converter, $I_{O(MAX)}$. The output voltage may fluctuate slightly with load due to the variation of the ripple voltage, whose magnitude is primarily determined by the inductor and the ESR of the output capacitors.
Note 3: Maximum load current depends on inductor value. With a 0.9 V or 1.0 V supply voltage, 4 mA can be obtained with a smaller inductor value.
Note 4: Converter efficiency is a function of the diode forward voltage and inductor winding resistance. It may also depend in varying degree on the inductor value and capacitor ESRs. By trading component size for better specifications, efficiency greater than 80% can be attained.
Note 5: Test performed using the test circuit below.

TYPICAL PERFORMANCE CHARACTERISTICS

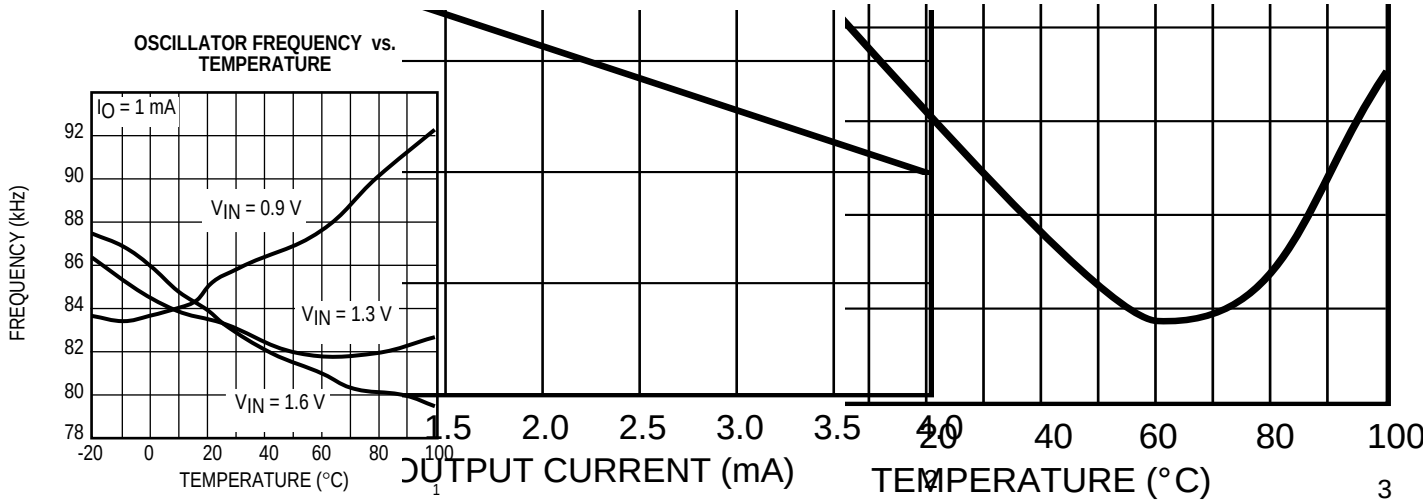

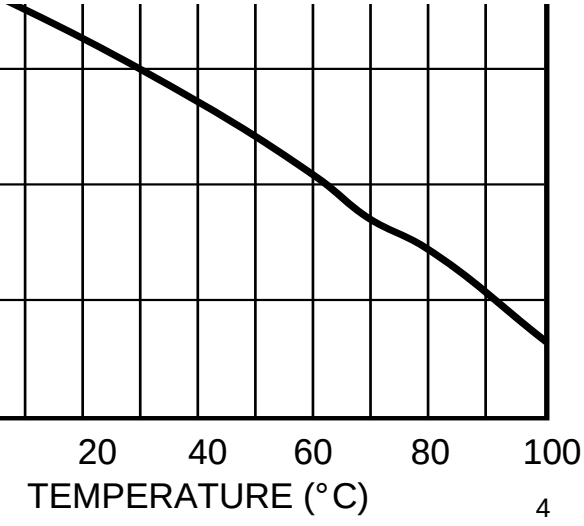

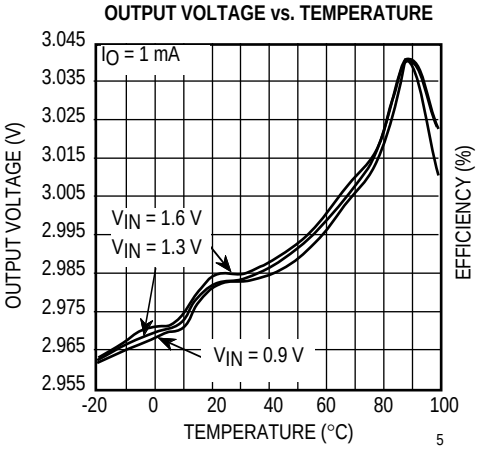

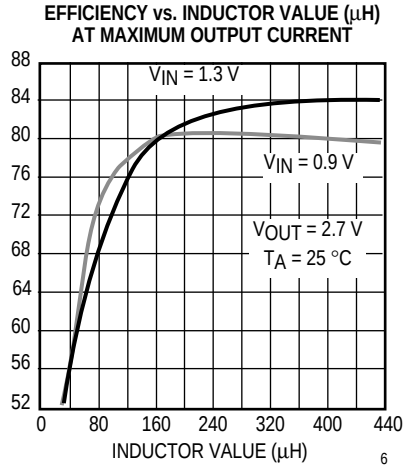

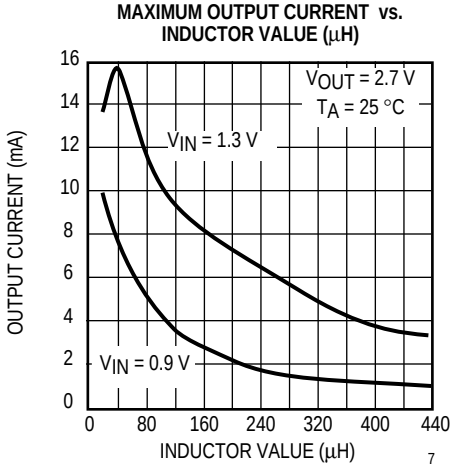

Handling Molded Resin Packages

All plastic molded packages absorb some moisture from the air. If moisture absorption occurs prior to soldering the device into the printed circuit board, increased separation of the lead from the plastic molding may occur, degrading the moisture barrier characteristics of the device. This property of plastic molding compounds should not be overlooked, paticularly in the case of very small packages, where the plastic is very thin.

In order to preserve the original moisture barrier properties of the package, devices are stored and shipped in moisture proof bags, filled with dry air. The bags should not be opened or damaged prior to the actual use of the devices. Once opened the devices should be stored in a low relative humidity environment (40 to 65%) or in an enclosed environment with desicant.

SINGLE-CELL APPLICATION

Theory of Operation

The converter operates with one terminal of an inductor connected to the DC input and the other terminal connected to the switch pin of the IC. When the switch is turned on, the inductor current ramps up. When the switch is turned off (or "lets go" of the inductor), the voltage flies up as the inductor seeks out a path for its current. A diode, also connected to the switching node, provides a path of conduction for the inductor current to the boost converter's output capacitor. The TK65015 monitors the voltage of the output capacitor and has a 3 volt threshold at which the converter switching becomes disactivated. So the output capacitor charges up to 3 volts and regulates there, provided that we don't draw more current from the output than the inductor can provide. The primary task, then, in designing a boost converter with the TK65015 is to determine the inductor value which will provide the amount of current needed to guarantee that the output voltage will be able to maintain regulation up to a specified maximum load current. Secondary tasks include choosing the diode, output capacitor, snubber, and filtering if desired.

The TK65015 runs with a fixed oscillator frequency and it regulates by applying or skipping pulses to the internal power switch. This regulation method is called *pulse burst modulation* (PBM).

Reset Feature

The TK65015 also features an output voltage monitor which provides a reset signal to a microprocessor or other external system controller. When the output voltage is below the reset threshold (which is less than the regulation threshold), the reset signal is asserted low, indicating that the system controller (e.g., microprocessor) should be in a reset mode. Such a condition might exist during startup of the converter or under an overload fault condition. This method of reset control can be used to prevent improper system operation which might occur at low supply voltage levels.

The TK65015 has a reset threshold between 2.48 and 2.70 volts.

Breakdown of a Switching Cycle

Although the derivation of equations is not discussed, the user will more easily be able to understand (and if desired, reproduce) the design equations if we begin by more precisely describing how the converter operates over a switching cycle.

From an oscillator standpoint, the switching cycle consists of only an on-time and an off-time. But from an inductor current standpoint, the switching cycle breaks down into three important sections: on-time, off-time, and deadtime. The on-time of the switch and the inductor current are synonymous. During the on-time, the inductor current increases. During the off-time of the switch, the inductor current decreases as it flows into the output. When (and if) the inductor current reaches zero, that marks the end of the inductor current off-time. For the rest of the cycle, the inductor current remains at zero. Since no energy is being either stored or delivered, that remaining time is called *deadtime*. This mode of the inductor current decaying to zero every cycle is called *discontinuous mode*. In summary, energy is stored in the inductor during the on-time, delivered to the output during the off-time, and remains at zero during the deadtime.

Unless otherwise specified, the term *off-time* refers to the inductor current, not to the switch.

Inductor Selection

It is under the condition of lowest input voltage that the boost converter output current capability is the lowest for a given inductance value. Three other significant parameters with worst case values for calculating the inductor value are: highest switching frequency, lowest duty ratio (of the switch on-time to the total switching period), and highest diode forward voltage. Other parameters which can affect the required inductor value, but for simplicity will not be considered in this first analysis are: the series resistance of the DC input source (i.e., the battery), the series resistance of the internal switch, the series resistance of the inductor itself, ESR of the output capacitor, input and output filter losses, and snubber power loss.

The converter reaches maximum output current capability when the switch runs at the oscillator frequency, without pulses being skipped. The output current of the boost converter is then given by the equation:

$$I_O = \frac{V_I^2 D^2}{2 f L \left(V_O + V_F - V_I\right)^2} \qquad (1)$$

where "V_I" is the input voltage, "D" is the on-time duty ratio of the switch, "f" is the switching (oscillator) frequency, "L" is the inductor value, "V_O" is the output voltage, and "V_F" is the diode forward voltage. It is important to note that this equation makes the assumption stated in equation form:

$$V_I \le \left(V_O + V_F\right)\left(1 - D\right) \qquad (2)$$

The implication from Eq. (2) is that the inductor will operate in discontinuous mode. From a practical standpoint for the TK65015, this is essentially guaranteed when using a single battery cell to power the converter.

Now, plugging in worst case conditions, the inductor value can be determined by simply transforming the above equation in terms of "L":

$$L_{MIN} = \frac{V_{I(MIN)}^{\ 2} D_{(MIN)}}{2 f_{(MAX)} I_{O(MAX)} \left[V_{O(MIN)} + V_{F(MAX)} - V_{I(MIN)} \right]^2} \quad (3)$$

where "$V_{F(MAX)}$" is best approximated by the diode forward voltage at about two-thirds of the peak diode current value. The peak diode current is the same as the peak input current, the peak switch current, and the peak inductor current. The formula is:

$$I_{PK} = \frac{V_I D}{f L} \quad (4)$$

Some reiteration is implied because "L" is a function of "V_F" which is a function of "I_{PK}" which, in turn, is a function of "L". The best way into this loop is to first approximate "V_F", determine "L", determine "I_{PK}", and then determine a new "V_F". Then, if necessary, reiterate.

When selecting the actual inductor, it is necessary to make sure that the peak current rating of the inductor (i.e., the current which causes the core to saturate) is greater than the maximum peak current that the inductor will encounter. To determine the maximum peak current, use Eq. (4) again, but this time plugging in maximum values for "V_I" and "D", and minimum values for "*f*" and "L".

It may also be necessary when selecting the inductor to check the rms current rating of the inductor. Whereas peak current rating is determined by core saturation, rms current rating is determined by wire size and power dissipation in the wire resistance. The inductor rms current is given by:

$$I_{L(RMS)} = I_{PK} \sqrt{\frac{D + \frac{I_{PK} f L}{V_O + V_F - V_I}}{3}} \quad (5)$$

where "I_{PK}" is the same maximized value that was just used to check against inductor peak current rating, and the term in the numerator within the radical that is added to the [on-time] duty ratio, "D", is the off-time duty ratio.

Toko America, Inc. offers a wide range of inductor values and sizes to accomodate varying power level requirements. The following series of Toko inductors work especially well with the TK65015: 10RF, 12RF, 3DF, D73, and D75. The 5CA series can be used for isolated-output applications, although such design objectives are not considered here.

Other Converter Components

In choosing a diode, parameters worthy of consideration are: forward voltage, reverse leakage, and capacitance. The biggest efficiency loss in the converter is due to the diode forward voltage. A schottky diode is typically chosen to minimize this loss.

Reverse leakage current is generally higher in schottkys than in pn-junction diodes. If the converter spends a good deal of the battery lifetime operating at very light load (i.e., the system under power is frequently in a stand-by mode), then the reverse leakage current could become a substantial fraction of the entire average load current, thus degrading battery life. So don't dramatically oversize the schottky diode if this is the case.

Diode capacitance isn't likely to make much of an undesirable contribution to switching loss at this relatively low switching frequency. It can, however, increase the snubber dissipation requirement.

The snubber is composed of a series RC network from the switch pin to ground (or to the output or input if preferred). Its function is to dampen the resonant LC circuit which rings during the inductor current deadtime. When the current flowing in the inductor through the output diode decays to zero, the parasitic capacitance at the switch pin from the switch, the diode, and the inductor winding has energy which rings back into the inductor, flowing back into the battery. If there is no snubbing, it is feasible that the switch pin voltage could ring below ground. Although the IC is well protected against latchup, this ringing may be undesirable due to radiated noise. In order to do an effective job, the snubber capacitor should be large (e.g., 5~20 times) in comparison to the parasitic capacitance. If it is unnecessarily large, then it dissipates extra energy every time the converter switches. The resistor of the snubber should be chosen such that it drops a substantial voltage as the ringing parasitic capacitance attempts to pull the snubber capacitor along for the ride. If the resistor is too small (e.g., zero), then the snubber capacitance just adds to the ringing energy. If the resistor is too large (e.g., infinite) then it effectively disengages the snubber capacitor from fighting the ringing.

The output capacitor, the capacitor connected from the diode cathode to ground, has the function of averaging the current pulses delivered through the inductor while holding a relatively smooth voltage for the converter load. Typi-

cally, the ripple voltage cannot be made smooth enough by this capacitor alone, so an output filter is used. In any case, to minimize the dissipation required by the output filter, the output capacitor should still be chosen with consideration to smoothing the voltage ripple. This implies that its ESR (equivalent series resistance) should be low. This usually means choosing a larger size than the smallest available for a given capacitance. To determine the peak ripple voltage on the output capacitor for a single switching cycle, multiply the ESR by the peak current which was calculated in Eq. (4). ESR can be a strong function of temperature, being worst case when cold. The capacitance should be capable of integrating a current pulse with little ripple. Typically, if a capacitor is chosen with reasonably low ESR and if the capacitor is the right type of capacitor for the application (typically aluminum electrolytic or tantalum), then the capacitance will be sufficient.

Higher-Order Considerations

In practice, it may be that the peak current (calculated in Eq. (4)) flowing out of the battery and into the converter will cause a substantial input ripple voltage dropped across the resistance inside the battery. This becomes a more likely case for cold temperature (when battery series resistance is higher), higher load rating converters (whose inductor's must draw higher peak currents), and when the battery is undersized for the peak current application.

While the simple analysis used a parameter "V_I" to represent the converter input voltage in the equations, one may not know what "V_I" value to use if it is delivered by a battery that allows high ripple to occur. For example, assuming that the converter draws a peak current of 100mA for a 1V input, and assuming that the input is powered by a AAA battery which might have a series resistance of 2Ω at 0°C, then if the battery measures in at 1V without load, in the converter the battery voltage will sag to about 0.8V during the on-time. This can cause two problems: (1) with the effective input voltage to the converter reduced in this way, the converter output current capability will decrease, (2) if the same battery is powering the TK65015 at the V_{IN} pin (i.e., the normal case), then the IC may become inoperable due to insufficient V_{IN}. This is why the application test circuit features an RC filter into the V_{IN} pin. The current draw is very small, so the voltage drop across this filter resistor is negligible. The filter serves to average out the input ripple caused by the battery resistance.

A more power-efficient method comes at the price of a large capacitor. This can be placed in parallel with the battery to help channel the converter current pulses away from the battery. The capacitor must have low ESR compared to the battery resistance in order to accomplish this effectively.

Still another solution is to filter the DC input with an RC or LC filter. However, it is more likely that the filter will either be too large or too lossy. It is of questionable benefit to smooth the input if the DC loss through the filter is large.

Assuming that input ripple voltage at the battery terminal and converter input is large, and that we filter the V_{IN} pin of the IC as in the test circuit, then the parameter "V_I" in the previous equations is not usable, and we will need to use parameters to represent both the source voltage *and* the source resistance.

The on-resistance of the TK65015's internal switch is about 1Ω maximum. Using the previously stated example of 100mA peak current, the voltage drop across the switch would reach 100mV during the on-time. This subtracts from the voltage which is impressed across the inductor to store energy during the on-time, so less energy is delivered to the output during the off-time.

It is quite possible for the inductor winding resistance to meet or exceed 1W, also. Voltage drop across the winding resistance of the inductor also subtracts from the voltage used to store energy in the core. So it also degrades efficiency.

As the inductor delivers energy into the output capacitor during the off-time, its current decays at a rate proportional to the voltage drop across it. The idealized equations assume that the voltage at the switching node is clamped at a diode drop above the output voltage. However, the ESR of the output capacitor can increase the voltage drop across the inductor by the additional voltage dropped across the ESR when the peak current flows in it. For example, the voltage across a capacitor with an ESR of 2Ω (not unusual at cold temperature) would jump by 200mV when 100mA peak current began to flow in it. This extra voltage drop would cause the inductor current to ramp down more quickly, thus, depleting the available output current.

$$I_O = \frac{V_{BB}{}^2 D\left(\frac{D}{2fL}\right)\left[1 - \frac{D}{2fL}\left(R_S + R_L + R_{SW}\right)\right]^2}{V_O + R_{OF} I_{O(TGT)} + \frac{D}{2fL}\left(V_{BB} R_U\right) + V_F - V_{BB}\left(1 - \frac{D}{2fL}\left(R_S + R_L\right)\right)} - \frac{fC_S\left[V_{BB}{}^2 + \left(V_O + V_F\right)^2 + \left(V_O + V_F - V_{BB}\right)^2\right]}{2\left(V_O + V_F\right)} \quad (6)$$

Higher-Order Design Equation

The equation above was developed as a closed form approximation for the design variable that required the least approximation to allow a closed form. In this case, that variable was "I_O" (e.g., as opposed to "L").

The approximations made in the equation development have the primary consequence that error is introduced as resistive losses become relatively large. As it is normally a practical design goal to ensure that resistive losses will be relatively small, this seems acceptable. The variables used are:

I_O	Output current *capability*
$I_{O(TGT)}$	Targeted output current capability
V_O	Output voltage
V_F	Diode forward voltage
V_{BB}	Battery voltage, unloaded
D	Oscillating duty ratio of main switch
f	Oscillator frequency
L	Inductance value
R_S	Source resistance (battery + filter)
R_L	Inductor winding resistance
R_{SW}	Switch on-state resistance
R_{OF}	Output filter resistance
R_U	ESR of upstream output capacitor
C_S	Snubber capacitance

Deriving a design solution with this equation is necessarily an iterative process. Use worst case tolerances as described for inductor selection, plugging in different values for "L" to approximately achieve an "I_O" equal to the targeted value. Then, fine tune the parasitic values as needed and, if necessary, readjust "L" again and reiterate the process.

DUAL-CELL APPLICATION

There are some risks involved in designing a converter with the TK65015 for use with two battery cells. But with some precautions taken it can be done and can provide substantially more output current than a single cell input for the same efficiency.

The risk lies in the possibility of saturating the inductor. For a single cell input it was only necessary to choose the current capability in accordance with the maximum peak current that could be calculated using Eq. (4). For a two cell input the peak current is not so readily determined because the inductor can go into *continuous mode*. When this happens, the increase of current during the on-time remains more-or-less the same (i.e., approximately equal to the peak current as calculated using Eq. (4)), but the inductor current doesn't start from zero. It starts from where it had decayed to during the previous off-time. There is no deadtime associated with a single switching period when in continuous mode because the inductor current never decays to zero within one cycle.

The cause for continuous mode operation is readily seen by noting that the rate of current increase in the inductor during the on-time is faster than the rate of decay during the off-time. The reason for that is because there is more voltage applied across the switch during the on-time (two battery cells) than during the off-time (3 volts plus a diode drop minus two battery cells). That situation, in conjunction with a switch duty ratio of about 50%, implies that the current can't fall as much as it can rise during a cycle. So when a switching cycle begins with zero current in the inductor, it ends with current still flowing.

Continuous mode operation implies that the inductor value no longer restricts the output current capability. With discontuous mode operation, it was necessary to choose a lower inductor value to achieve a higher output current rating. (Eq. (6) specifically shows "I_O" as a function of "L".) This also implied higher ripple current from the battery. In continuous mode operation, one can choose a larger inductor value intentionally if it is desirable to minimize ripple current. The catch is that high inductance and high current rating together generally imply larger inductor size. But generally this unrestricted inductor value allows more freedom in the converter design.

The dual cell input and the continuous current rating imply that the peak current in the inductor will be at least twice as high as it would for a single cell input using the same inductor value. The Toko D73 and D75 series inductors are particular suited for the higher output current capability of the dual cell configuration.

For operation at a fixed maximum load, the inductor can be kept free of saturation by choosing its peak current rating equal to the converter output current rating plus the single cycle ripple current peak given by Eq. (4). With that guideline followed, the risk of saturation becomes only a

dynamic problem. Under the situation of placing a dynamic load on the output of the converter, saturation may occur. Fortunately, unlike off-line powered converters, battery powered converters tend to be quite forgiving of dynamic saturation, due to the limitation of available power.

Startup of the converter is an example of a practically unavoidable dynamic load change (complicated by an output operating point change) that can cause saturation of the inductor. However, this particular phenomenon applies to single cell powered converters, too - so saturation is not entirely avoidable, yet does not cause system problems. It is beyond the scope of this application note to quantify the practical limitations of allowed dynamic saturation and how stressful it may be to the various components involved. It is left to the user to examine emperically the dynamic saturation phenomenon and determine what performance is acceptable. In most cases no problem will be exhibited.

PACKAGE OUTLINE

SOT-23L

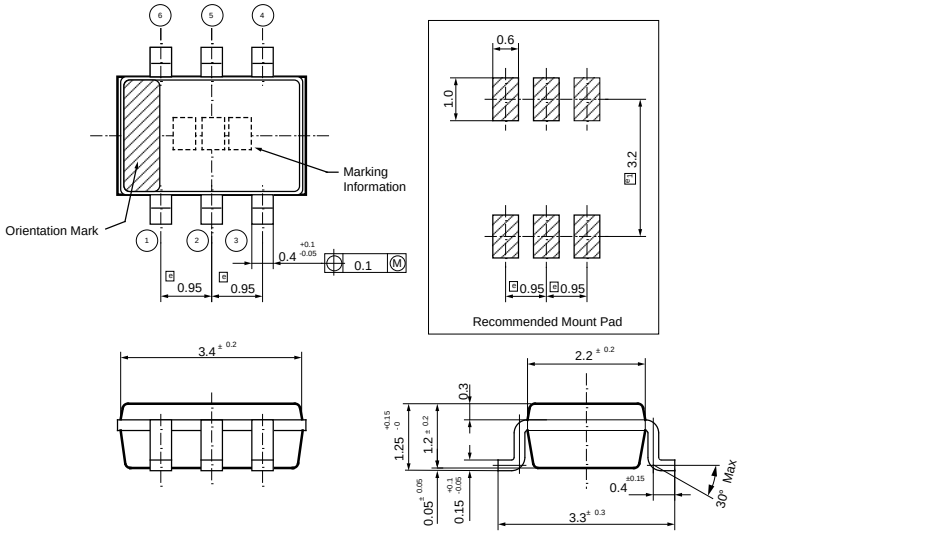

Unit:mm

MARKING INFORMATION

M15

The information furnished by TOKO, Inc. is believed to be accurate and reliable. However, TOKO reserves the right to make changes or improvements in the design, specification or manufacture of its products without further notice. TOKO does not assume any liability arising from the application or use of any product or circuit described herein, nor for any infringements of patents or other rights of third parties which may result from the use of its products. No license is granted by implication or otherwise under any patent or patent rights of TOKO, Inc.

TOKO America, Inc.
1250 Feehanville Dr.
Mt. Prospect, IL 60056
Tel: (800) PIK-TOKO
Fax: (847) 699-1194

YOUR LOCAL REPRESENTATIVE IS:

2-2-96
Please order by literature number:
IC-137-TK65015