Isc N-Channel MOSFET Transistor TK35A08N1，ITK35A08N1

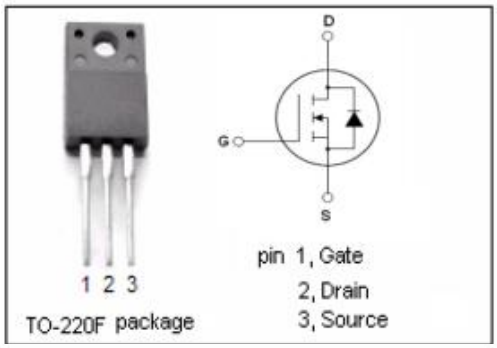

• FEATURES

- Low drain-source on-resistance:
  $R_{DS}(ON)$ = 12.0mΩ (Max) (V_{GS} = 10 V)
- Enhancement mode:
  Vth = 2.0 to 4.0V (V_{DS} = 10 V, I_D=0.3mA)
- 100% avalanche tested
- Minimum Lot-to-Lot variations for robust device performance and reliable operation

• DESCRIPTION

- Switching Voltage Regulators

• ABSOLUTE MAXIMUM RATINGS(T_a=25℃)

SYMBOL	PARAMETER	VALUE	UNIT
V_{DSS}	Drain-Source Voltage	80	V
V_{GS}	Gate-Source Voltage	±20	V
I_D	Drain Current-Continuous	35	A
I_{DM}	Drain Current-Single Pulsed	116	A
P_D	Total Dissipation @T_C=25℃	30	W
T_j	Max. Operating Junction Temperature	150	℃
T_{stg}	Storage Temperature	-55~150	℃

• THERMAL CHARACTERISTICS

SYMBOL	PARAMETER	MAX	UNIT
Rth(ch-c)	Channel-to-case thermal resistance	4.16	℃/W
Rth(ch-a)	Channel-to-ambient thermal resistance	62.5	℃/W

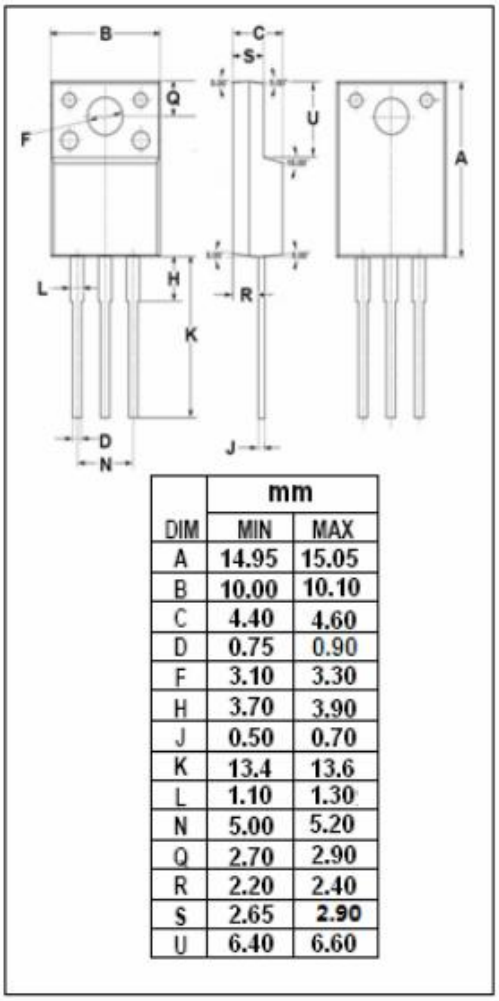

DIM	mm MIN	MAX
A	14.95	15.05
B	10.00	10.10
C	4.40	4.60
D	0.75	0.90
F	3.10	3.30
H	3.70	3.90
J	0.50	0.70
K	13.4	13.6
L	1.10	1.30
N	5.00	5.20
Q	2.70	2.90
R	2.20	2.40
S	2.65	2.90
U	6.40	6.60

Download from alldatasheet.com

Isc N-Channel MOSFET Transistor TK35A08N1，ITK35A08N1

ELECTRICAL CHARACTERISTICS

T_C=25℃ unless otherwise specified

SYMBOL	PARAMETER	CONDITIONS	MIN	TYP	MAX	UNIT
BV_{DSS}	Drain-Source Breakdown Voltage	V_{GS}=0V; I_D= 10mA	80			V
$V_{GS(th)}$	Gate Threshold Voltage	V_{DS}= 10V; I_D=0.3mA	2.0		4.0	V
$R_{DS(on)}$	Drain-Source On-Resistance	V_{GS}=10V; I_D=17.5A			12.2	mΩ
I_{GSS}	Gate-Source Leakage Current	V_{GS}= ±20V;V_{DS}= 0V			±0.1	μA
I_{DSS}	Drain-Source Leakage Current	V_{DS}= 80V; V_{GS}= 0V			10	μA
V_{SDF}	Diode forward voltage	I_{DR} =35A, V_{GS} = 0 V			1.2	V

Download from alldatasheet.com