TIBPAL22V10-20M
HIGH-PERFORMANCE *IMPACT-X* ™ PROGRAMMABLE ARRAY LOGIC CIRCUITS

SRPS012B – JUNE 1990 – REVISED APRIL 2010

- **Second-Generation PLD Architecture**
- **High-Performance Operation:**
  f_{max} (External Feedback) . . . 33.3 MHz
  Propagation Delay . . . 20 ns Max
- **Increased Logic Power – Up to 22 Inputs and 10 Outputs**
- **Increased Product Terms – Average of 12 per Output**
- **Variable Product Term Distribution Allows More Complex Functions to Be Implemented**
- **Each Output Is User Programmable for Registered or Combinational Operation, Polarity, and Output Enable Control**
- **Power-Up Clear on Registered Outputs**
- **TTL-Level Preload for Improved Testability**
- **Extra Terms Provide Logical Synchronous Set and Asynchronous Reset Capability**
- **Fast Programming, High Programming Yield, and Unsurpassed Reliability Ensured Using Ti-W Fuses**
- **AC and DC Testing Done at the Factory Utilizing Special Designed-In Test Features**
- **Dependable Texas Instruments Quality and Reliability**
- **Package Options Include Plastic Dual-In-Line and Chip Carrier Packages**

JT OR W PACKAGE
(TOP VIEW)

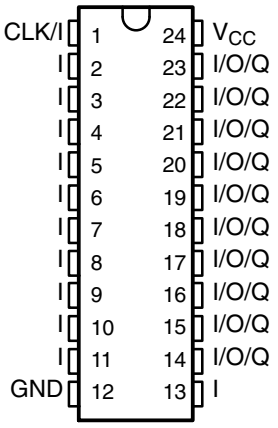

FK PACKAGE
(TOP VIEW)

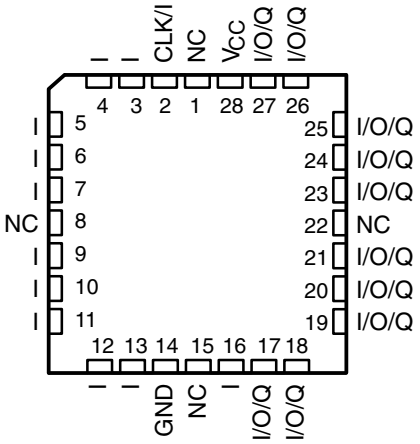

NC – No internal connection
Pin assignments in operating mode

description

The TIBPAL22V10-20M is a programmable array logic device featuring high speed and functional equivalency when compared to presently available devices. They are implemented with the familiar sum-of-products (AND-OR) logic structure featuring the new concept “Programmable Output Logic Macrocell”. These IMPACT-X™ circuits combine the latest Advanced Low-Power Schottky technology with proven titanium-tungsten fuses to provide reliable, high-performance substitutes for conventional TTL logic.

These devices contain up to 22 inputs and 10 outputs. They incorporate the unique capability of defining and programming the architecture of each output on an individual basis. Outputs may be registered or nonregistered and inverting or noninverting as shown in the output logic macrocell diagram. The ten potential outputs are enabled through the use of individual product terms.

Further advantages can be seen in the introduction of variable product term distribution. This technique allocates from 8 to 16 logical product terms to each output for an average of 12 product terms per output. This variable allocation of terms allows far more complex functions to be implemented than in previously available devices.

This device is covered by U.S. Patent 4,410,987.
IMPACT-X is a trademark of Texas Instruments Incorporated.

PRODUCTION DATA information is current as of publication date. Products conform to specifications per the terms of Texas Instruments standard warranty. Production processing does not necessarily include testing of all parameters.

Copyright © 2010, Texas Instruments Incorporated

description (continued)

Circuit design is enhanced by the addition of a synchronous set and an asynchronous reset product term. These functions are common to all registers. When the synchronous set product term is a logic 1, the output registers are loaded with a logic 1 on the next low-to-high clock transition. When the asynchronous reset product term is a logic 1, the output registers are loaded with a logic 0. The output logic level after set or reset depends on the polarity selected during programming. Output registers can be preloaded to any desired state during testing. Preloading permits full logical verification during product testing.

With features such as programmable output logic macrocells and variable product term distribution, the TIBPAL22V10-20M offers quick design and development of custom LSI functions with complexities of 500 to 800 equivalent gates. Since each of the ten output pins may be individually configured as inputs on either a temporary or permanent basis, functions requiring up to 21 inputs and a single output or down to 12 inputs and 10 outputs are possible.

A power-up clear function is supplied that forces all registered outputs to a predetermined state after power is applied to the device. Registered outputs selected as active-low power up with their outputs high. Registered outputs selected as active-high power up with their outputs low.

A single security fuse is provided on each device to discourage unauthorized copying of fuse patterns. Once blown, the verification circuitry is disabled and all other fuses will appear to be open.

The TIBPAL22V10-20M is characterized for operation over the full military temperature range of –55°C to 125°C.

functional block diagram (positive logic)

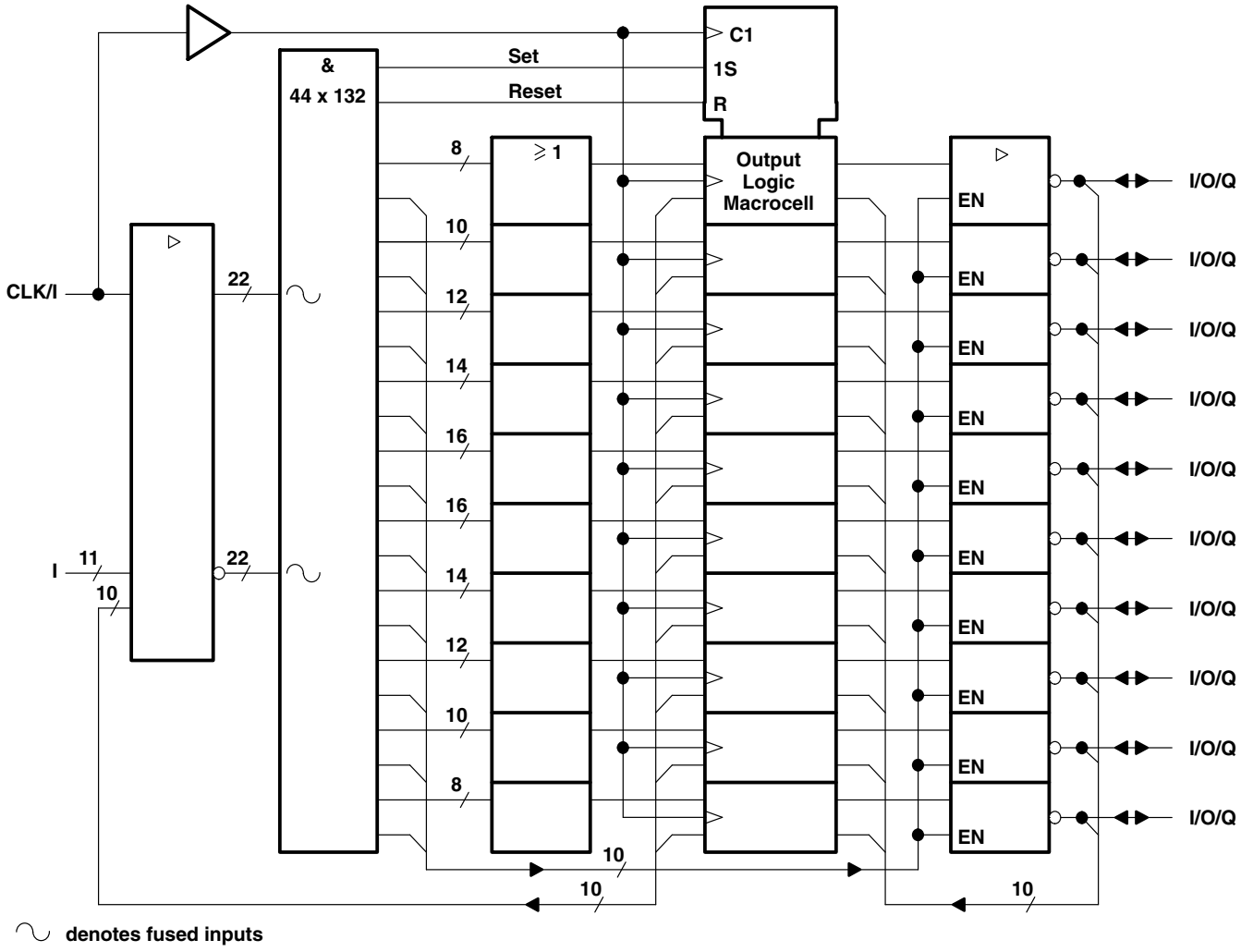

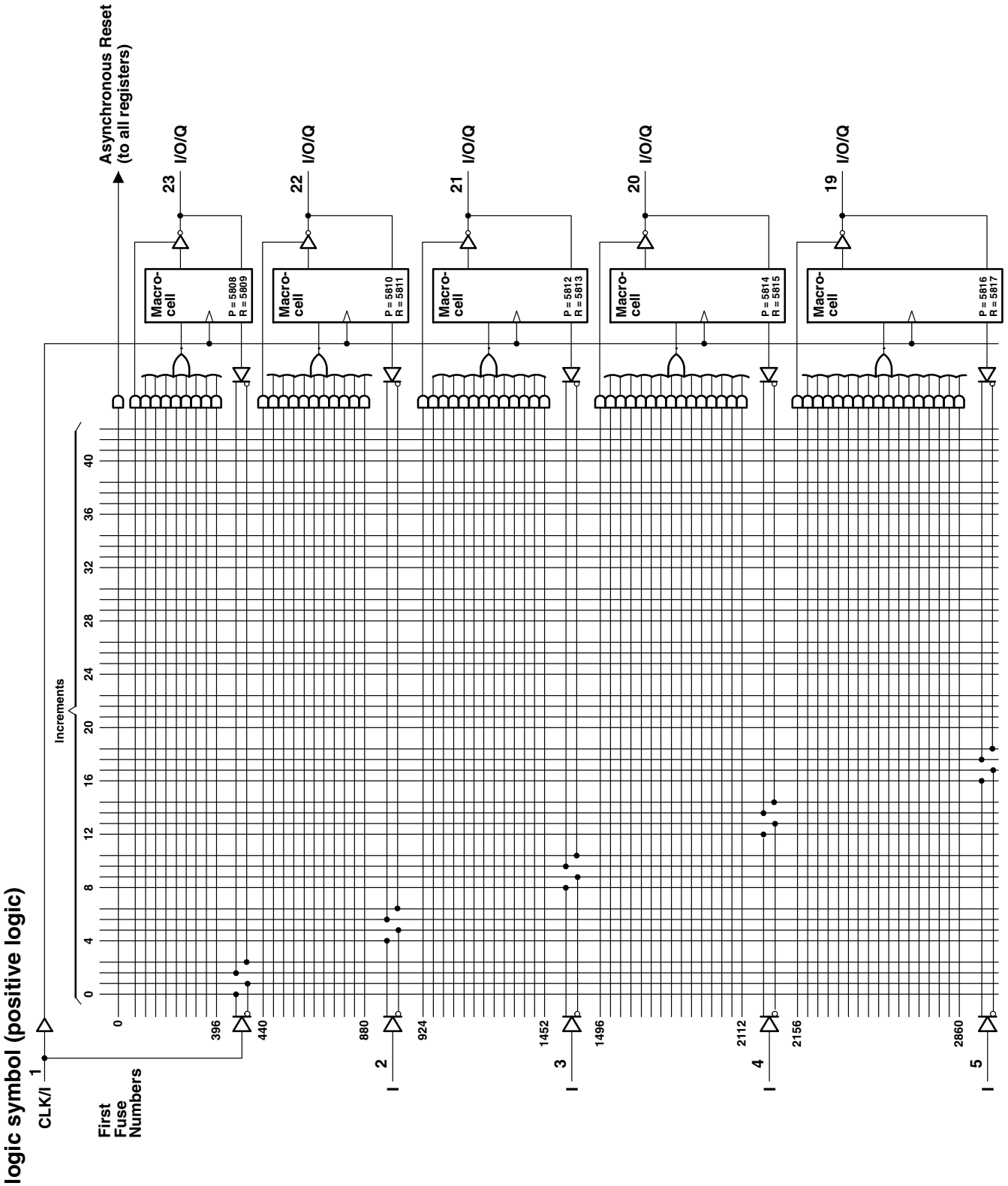
logic symbol (positive logic)
Asynchronous Reset
(to all registers)
23 I/O/Q
22 I/O/Q
21 I/O/Q
20 I/O/Q
19 I/O/Q
Macro-cell
P = 5808
R = 5809
P = 5810
R = 5811
P = 5812
R = 5813
P = 5814
R = 5815
P = 5816
R = 5817
Increments
0
4
8
12
16
20
24
28
32
36
40
CLK/I 1
First Fuse Numbers
0
396
440
880
924
1452
1496
2112
2156
2860
2 I
3 I
4 I
5 I

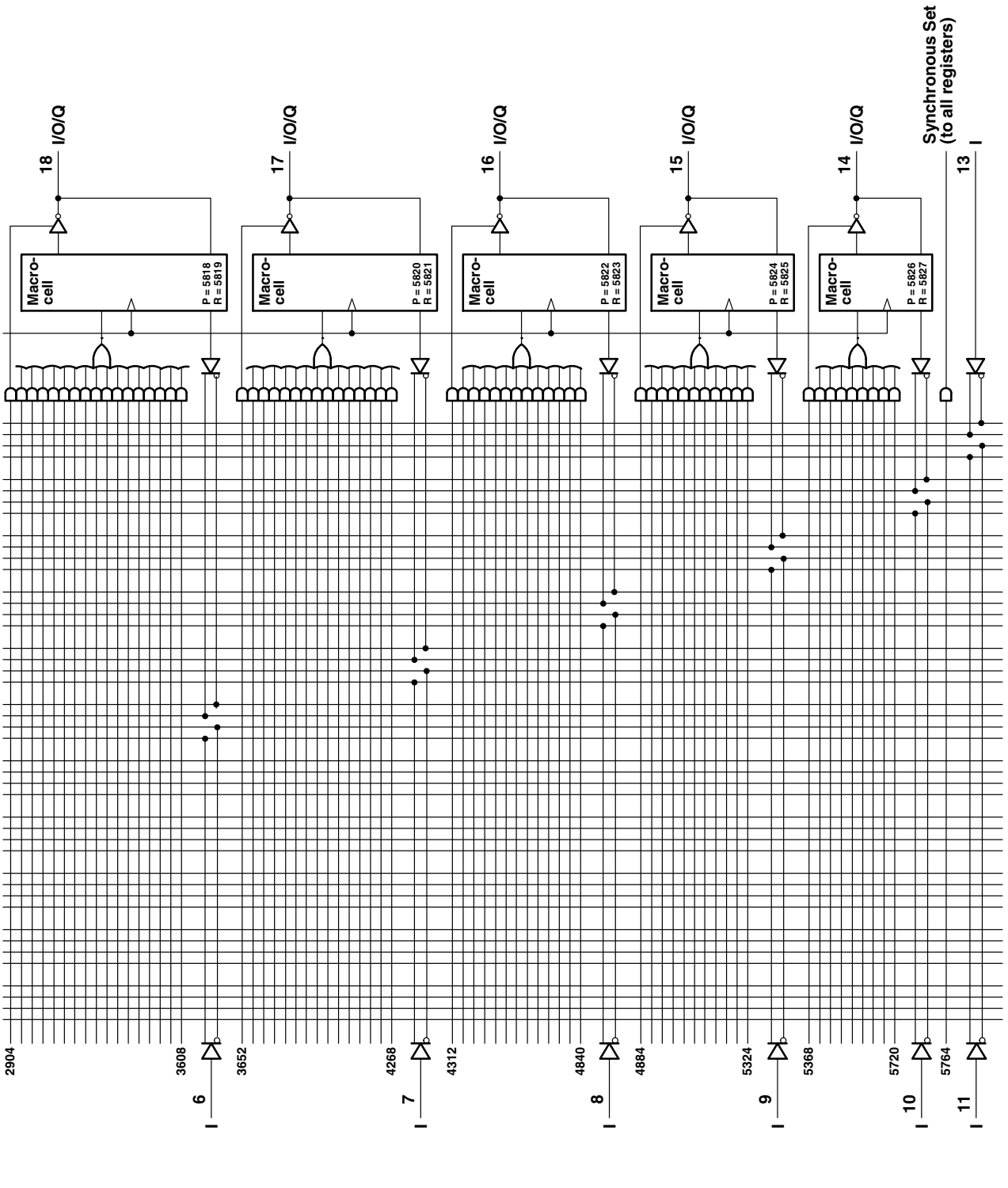
18 I/O/Q
17 I/O/Q
16 I/O/Q
15 I/O/Q
14 I/O/Q
Synchronous Set (to all registers)
13 I
Macro-cell
P = 5818 R = 5819
P = 5820 R = 5821
P = 5822 R = 5823
P = 5824 R = 5825
P = 5826 R = 5827
2904
3608
3652
4268
4312
4840
4884
5324
5368
5720
5764
6 I
7 I
8 I
9 I
10 I
11 I
Fuse number = First fuse number + Increment
Inside each MACROCELL the "P" fuse is the polarity fuse and the "R" fuse is the register fuse.

output logic macrocell diagram

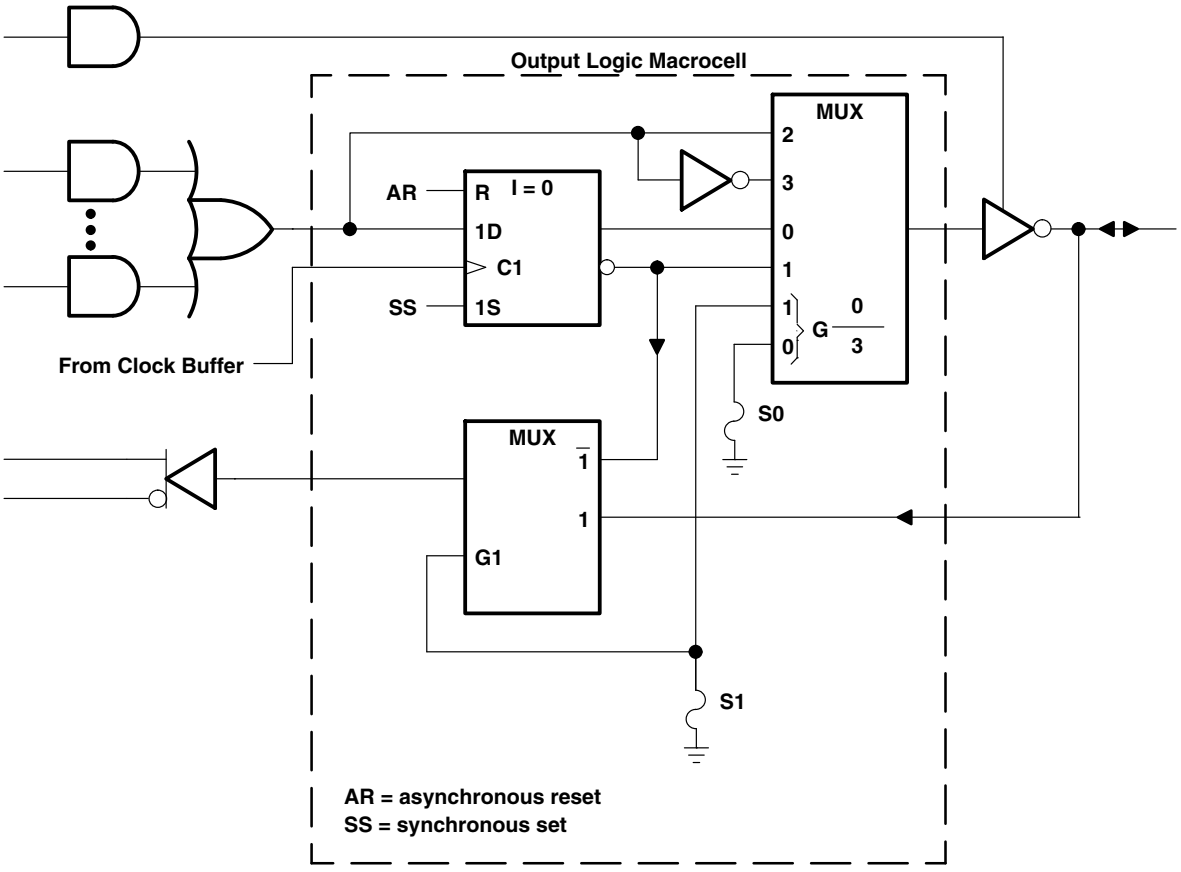

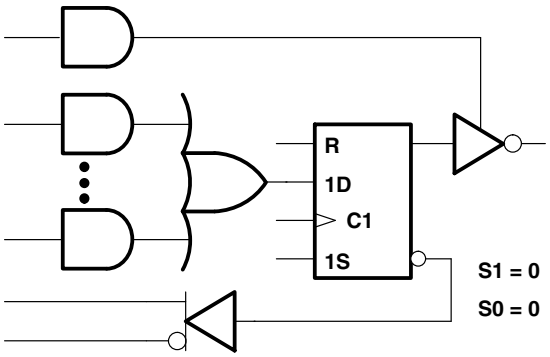

REGISTER FEEDBACK, REGISTERED, ACTIVE-LOW OUTPUT

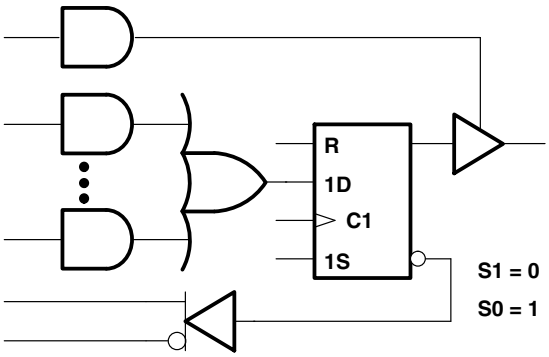

REGISTER FEEDBACK, REGISTERED, ACTIVE-HIGH OUTPUT

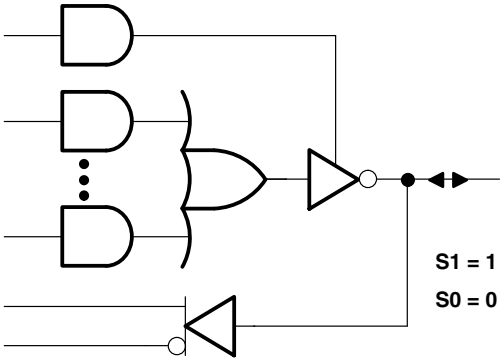

I/O FEEDBACK, COMBINATIONAL, ACTIVE-LOW OUTPUT

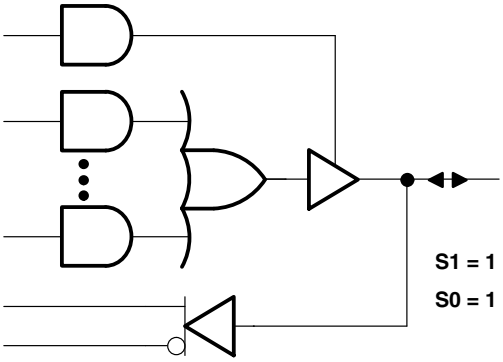

I/O FEEDBACK, COMBINATIONAL, ACTIVE-HIGH OUTPUT

MACROCELL FEEDBACK AND OUTPUT FUNCTION TABLE

FUSE SELECT		FEEDBACK AND OUTPUT CONFIGURATION		
S1	S0			
0	0	Register feedback	Registered	Active low
0	1	Register feedback	Registered	Active high
1	0	I/O feedback	Combinational	Active low
1	1	I/O feedback	Combinational	Active high

0 = unblown fuse, 1 = blown fuse
S1 and S0 are select-function fuses as shown in the output logic macrocell diagram.

Figure 1. Resultant Macrocell Feedback and Output Logic After Programming

absolute maximum ratings over operating free-air temperature range (unless otherwise noted)

Supply voltage, V_{CC} (see Note 1) . . . . . 7 V
Input voltage (see Note 1) . . . . . 5.5 V
Voltage applied to disabled output (see Note 1) . . . . . 5.5 V
Operating free-air temperature range . . . . . −55°C to 125°C
Storage temperature range . . . . . −65°C to 150°C

NOTE 1: These ratings apply except for programming pins during a programming cycle or during a preload cycle.

recommended operating conditions

			MIN	NOM	MAX	UNIT
V_{CC}	Supply voltage		4.5	5	5.5	V
V_{IH}	High-level input voltage		2		5.5	V
V_{IL}	Low-level input voltage				0.8	V
I_{OH}	High-level output current				−2	mA
I_{OL}	Low-level output current				12	mA
t_w	Pulse duration	Clock high or low	15			ns
		Asynchronous Reset high or low	20			
t_{su}	Setup time before clock↑	Input	17			ns
		Feedback	17			
		Synchronous Preset (active)	17			
		Asynchronous Reset (inactive)	20			
t_h	Hold time, input, set, or feedback after clock↑		0			ns
T_A	Operating free-air temperature		−55		125	°C

electrical characteristics over recommended operating free-air temperature range

PARAMETER		TEST CONDITIONS			MIN	TYP†	MAX	UNIT
V_{IK}		V_{CC} = 4.5 V,	I_I = −18 mA				−1.2	V
V_{OH}		V_{CC} = 4.5 V,	I_{OH} = −2 mA		2.4	3.5		V
V_{OL}		V_{CC} = 4.5 V,	I_{OL} = 12 mA			0.25	0.5	V
I_{OZH}		V_{CC} = 5.5 V,	V_O = 2.7 V				0.1	mA
I_{OZL}		V_{CC} = 5.5 V,	V_O = 0.4 V				−0.1	mA
I_I		V_{CC} = 5.5 V,	V_I = 5.5 V				1	mA
I_{IH}		V_{CC} = 5.5 V,	V_I = 2.7 V				25	μA
I_{IL}	CLK	V_{CC} = 5.5 V,	V_I = 0.4 V				−0.2	mA
	All others						−0.1	
I_{OS}‡		V_{CC} = 5.5 V,	V_O = 0.5 V		−30		−90	mA
I_{CC}		V_{CC} = 5.5 V,	V_I = GND,	Outputs open			200	mA
C_i		f = 1 MHz,	V_I = 2 V			5.5		pF
C_o		f = 1 MHz,	V_O = 2 V			8		pF
C_{clk}		f = 1 MHz,	V_{CLK} = 2 V			7		pF

† All typical values are at V_{CC} = 5 V, T_A = 25°C.

‡ Not more than one output should be shorted at a time, and the duration of the short circuit should not exceed one second. V_O is set at 0.5 V to avoid test problems caused by test equipment ground degradation.

switching characteristics over recommended ranges of supply voltage and operating free-air temperature (unless otherwise noted)

PARAMETER	FROM (INPUT)	TO (OUTPUT)	TEST CONDITION	MIN	MAX	UNIT
f_{max}§	External feedback			33.3		MHz
t_{pd}	I, I/O	I/O	R1 = 390 Ω,		20	ns
t_{pd}	I, I/O (reset)	Q	R2 = 750 Ω,		25	ns
t_{pd}	CLK	Q	See Figure 4		15	ns
t_{en}	I, I/O	I/O, Q			20	ns
t_{dis}	I, I/O	I/O, Q			20	ns

§ f_{max} (with feedback) = $\frac{1}{t_{su} + t_{pd}(\text{CLK to Q})}$. Verification of t_{su} and t_{pd}(CLK to Q) may be used to verify expected performance.

preload procedure for registered outputs (see Notes 2 and 3)

The output registers can be preloaded to any desired state during device testing. This permits any state to be tested without having to step through the entire state-machine sequence. Each register is preloaded individually by following the steps given below:

Step 1. With V_{CC} at 5 V and pin 1 at V_{IL}, raise pin 13 to V_{IHH}.
Step 2. Apply either V_{IL} or V_{IH} to the output corresponding to the register to be preloaded.
Step 3. Pulse pin 1, clocking in preload data.
Step 4. Remove output voltage, then lower pin 13 to V_{IL}. Preload can be verified by observing the voltage level at the output pin.

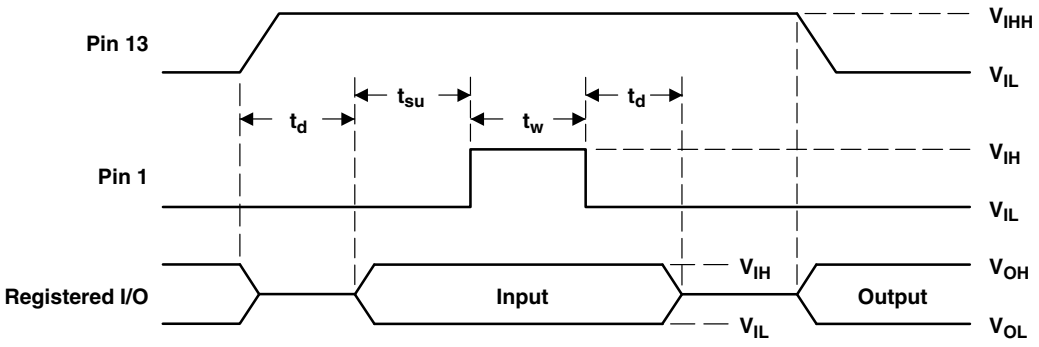

Figure 2. Preload Waveforms

NOTES: 2. Pin numbers shown are for the JT package only. If chip-carrier socket adapter is not used, pin numbers must be changed accordingly.
3. $t_d = t_{su} = t_w = 100$ ns to 1000 ns. $V_{IHH} = 10.25$ V to 10.75 V.

power-up reset

Following power up, all registers are reset to zero. The output level depends on the polarity selected during programming. This feature provides extra flexibility to the system designer and is especially valuable in simplifying state-machine initialization. To ensure a valid power-up reset, it is important that the rise of V_{CC} be monotonic. Following power-up reset, a low-to-high clock transition must not occur until all applicable input and feedback setup times are met.

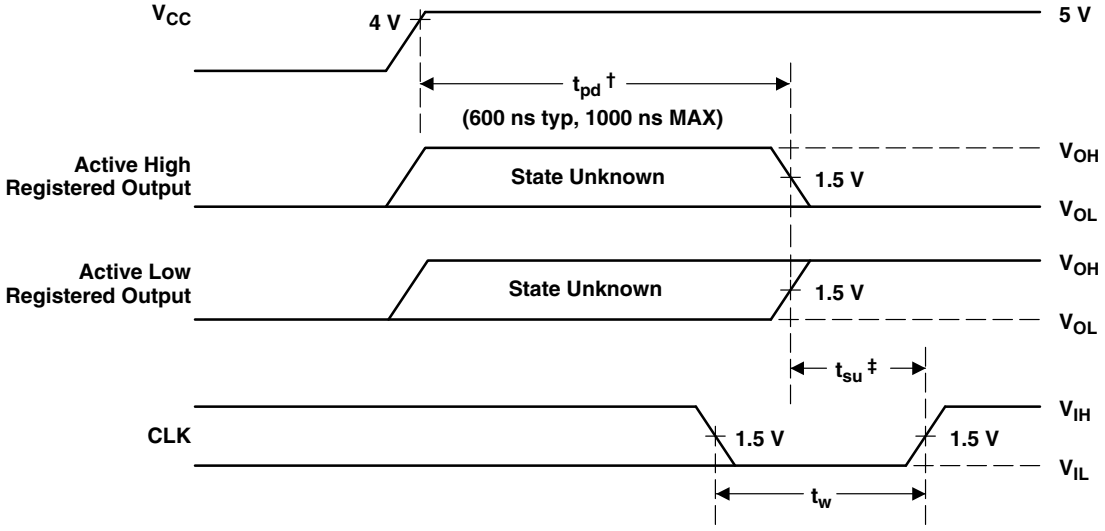

† This is the power-up reset time and applies to registered outputs only. The values shown are from characterization data.
‡ This is the setup time for input or feedback.

Figure 3. Power-Up Reset Waveforms

programming information

Texas Instruments programmable logic devices can be programmed using widely available software and inexpensive device programmers.

Complete programming specifications, algorithms, and the latest information on hardware, software, and firmware are available upon request. Information on programmers capable of programming Texas Instruments programmable logic is also available, upon request, from the nearest TI field sales office, local authorized TI distributor, or by calling Texas Instruments at (214) 997-5666.

PARAMETER MEASUREMENT INFORMATION

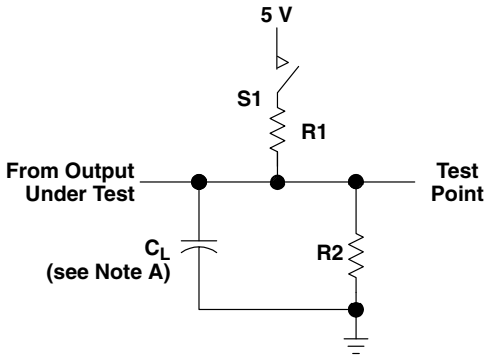

LOAD CIRCUIT FOR 3-STATE OUTPUTS

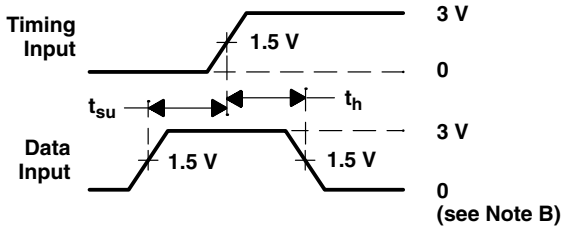

VOLTAGE WAVEFORMS
SETUP AND HOLD TIMES

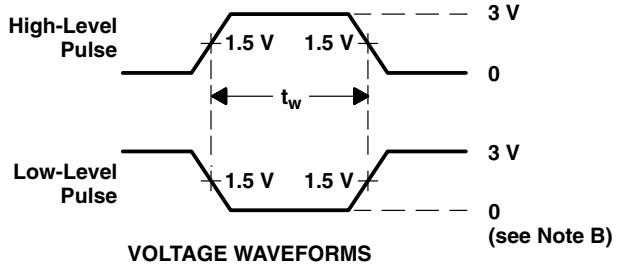

VOLTAGE WAVEFORMS
PULSE DURATIONS

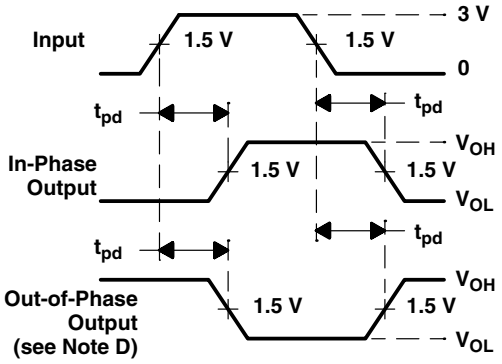

VOLTAGE WAVEFORMS
PROPAGATION DELAY TIMES

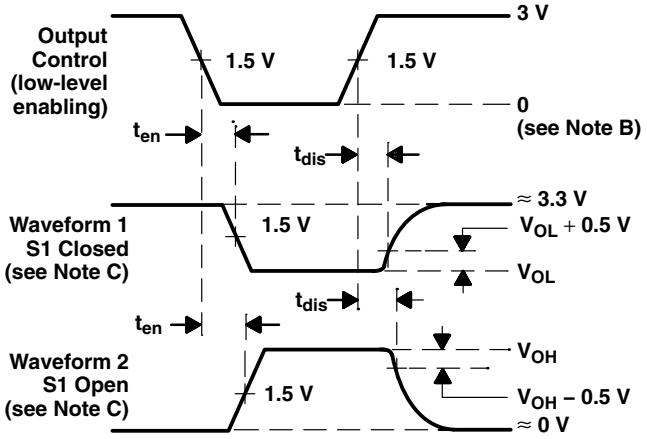

VOLTAGE WAVEFORMS
ENABLE AND DISABLE TIMES, 3-STATE OUTPUTS

NOTES: A. C_L includes probe and jig capacitance and is 50 pF for t_{pd} and t_{en}, 5 pF for t_{dis}.
B. All input pulses have the following characteristics: PRR ≤ 10 MHz, t_r and t_f = 2 ns, duty cycle = 50%.
C. Waveform 1 is for an output with internal conditions such that the output is low except when disabled by the output control. Waveform 2 is for an output with internal conditions such that the output is high except when disabled by the output control.
D. When measuring propagation delay times of 3-state outputs, switch S1 is closed.
E. Equivalent loads may be used for testing.

Figure 4. Load Circuit and Voltage Waveforms

TYPICAL CHARACTERISTICS

SUPPLY CURRENT vs FREE–AIR TEMPERATURE

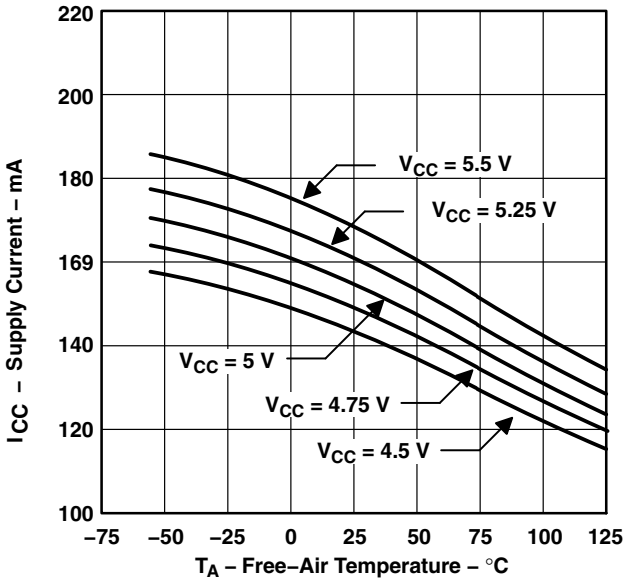

Figure 5

PROPAGATION DELAY TIME vs SUPPLY VOLTAGE

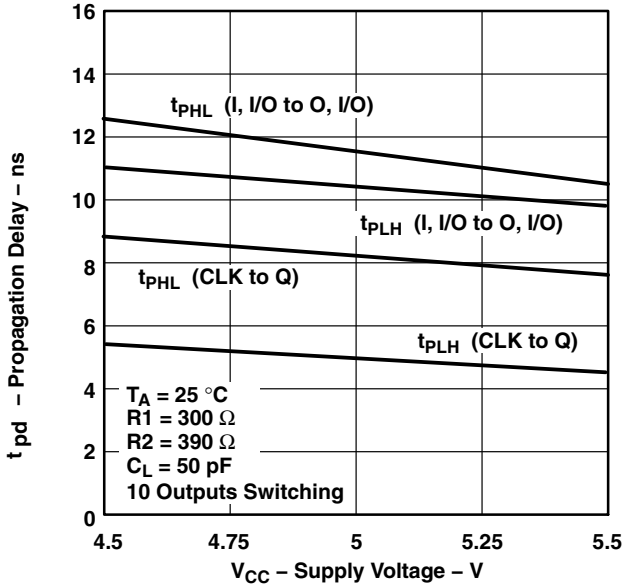

Figure 6

PROPAGATION DELAY TIME vs FREE–AIR TEMPERATURE

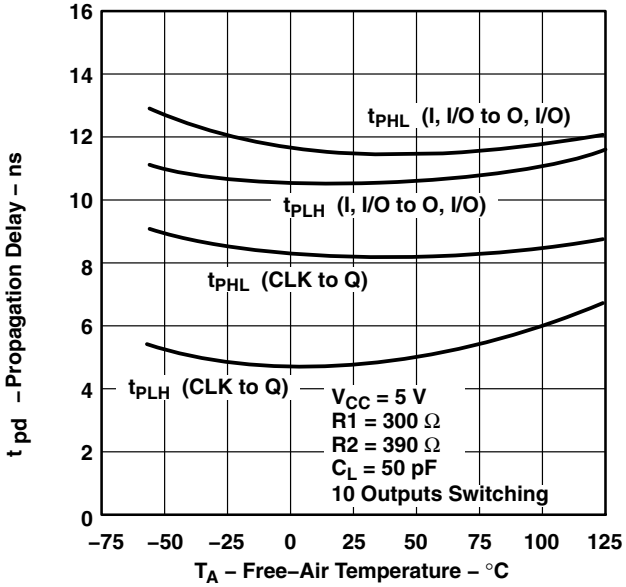

Figure 7

PROPAGATION DELAY TIME vs LOAD CAPACITANCE

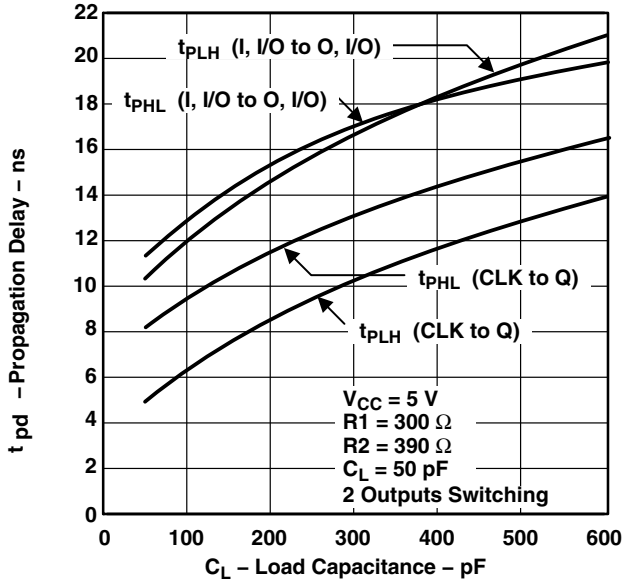

Figure 8

TYPICAL CHARACTERISTICS

POWER DISSIPATION vs FREQUENCY 10–BIT COUNTER MODE

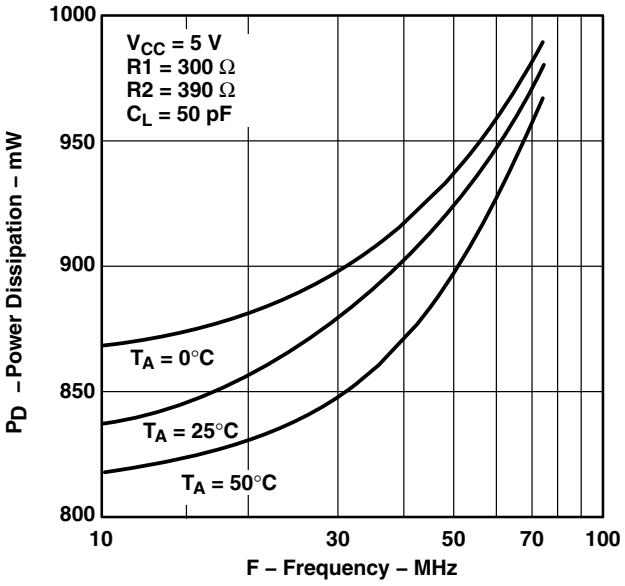

Figure 9

PROPAGATION DELAY TIME vs NUMBER OF OUTOUTS SWITCHING

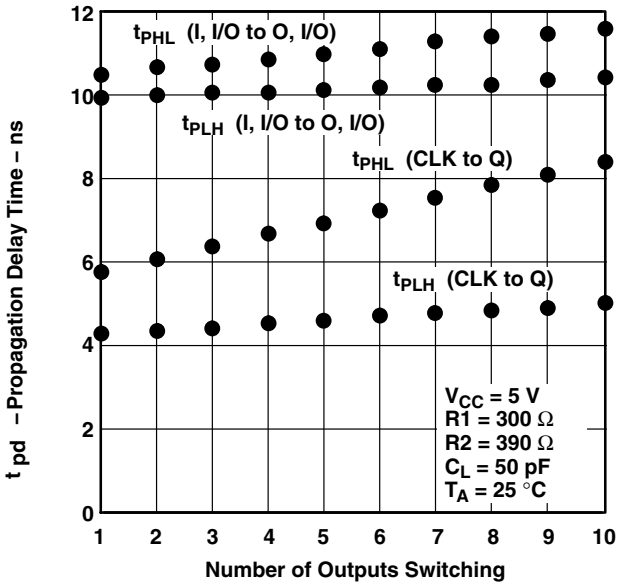

Figure 10

PACKAGING INFORMATION

Orderable Device	Status (1)	Package Type	Package Drawing	Pins	Package Qty	Eco Plan (2)	Lead/Ball Finish (6)	MSL Peak Temp (3)	Op Temp (°C)	Device Marking (4/5)	Samples
5962-86053043A	ACTIVE	LCCC	FK	28	1	TBD	Call TI	Call TI	-55 to 125	5962-86053043A TIBPAL22V10-20MFKB	Samples
5962-8605304LA	ACTIVE	CDIP	JT	24	1	TBD	Call TI	Call TI	-55 to 125	5962-8605304LA TIBPAL22V10-20MJTB	Samples
TIBPAL22V10-20MFKB	ACTIVE	LCCC	FK	28	1	TBD	POST-PLATE	N / A for Pkg Type	-55 to 125	5962-86053043A TIBPAL22V10-20MFKB	Samples
TIBPAL22V10-20MJTB	ACTIVE	CDIP	JT	24	1	TBD	A42	N / A for Pkg Type	-55 to 125	5962-8605304LA TIBPAL22V10-20MJTB	Samples

(1) The marketing status values are defined as follows:
ACTIVE: Product device recommended for new designs.
LIFEBUY: TI has announced that the device will be discontinued, and a lifetime-buy period is in effect.
NRND: Not recommended for new designs. Device is in production to support existing customers, but TI does not recommend using this part in a new design.
PREVIEW: Device has been announced but is not in production. Samples may or may not be available.
OBSOLETE: TI has discontinued the production of the device.

(2) Eco Plan - The planned eco-friendly classification: Pb-Free (RoHS), Pb-Free (RoHS Exempt), or Green (RoHS & no Sb/Br) - please check http://www.ti.com/productcontent for the latest availability information and additional product content details.
TBD: The Pb-Free/Green conversion plan has not been defined.
Pb-Free (RoHS): TI's terms "Lead-Free" or "Pb-Free" mean semiconductor products that are compatible with the current RoHS requirements for all 6 substances, including the requirement that lead not exceed 0.1% by weight in homogeneous materials. Where designed to be soldered at high temperatures, TI Pb-Free products are suitable for use in specified lead-free processes.
Pb-Free (RoHS Exempt): This component has a RoHS exemption for either 1) lead-based flip-chip solder bumps used between the die and package, or 2) lead-based die adhesive used between the die and leadframe. The component is otherwise considered Pb-Free (RoHS compatible) as defined above.
Green (RoHS & no Sb/Br): TI defines "Green" to mean Pb-Free (RoHS compatible), and free of Bromine (Br) and Antimony (Sb) based flame retardants (Br or Sb do not exceed 0.1% by weight in homogeneous material)

(3) MSL, Peak Temp. - The Moisture Sensitivity Level rating according to the JEDEC industry standard classifications, and peak solder temperature.

(4) There may be additional marking, which relates to the logo, the lot trace code information, or the environmental category on the device.

(5) Multiple Device Markings will be inside parentheses. Only one Device Marking contained in parentheses and separated by a "~" will appear on a device. If a line is indented then it is a continuation of the previous line and the two combined represent the entire Device Marking for that device.

(6) Lead/Ball Finish - Orderable Devices may have multiple material finish options. Finish options are separated by a vertical ruled line. Lead/Ball Finish values may wrap to two lines if the finish value exceeds the maximum column width.

Important Information and Disclaimer: The information provided on this page represents TI's knowledge and belief as of the date that it is provided. TI bases its knowledge and belief on information provided by third parties, and makes no representation or warranty as to the accuracy of such information. Efforts are underway to better integrate information from third parties. TI has taken and continues to take reasonable steps to provide representative and accurate information but may not have conducted destructive testing or chemical analysis on incoming materials and chemicals. TI and TI suppliers consider certain information to be proprietary, and thus CAS numbers and other limited information may not be available for release.

In no event shall TI's liability arising out of such information exceed the total purchase price of the TI part(s) at issue in this document sold by TI to Customer on an annual basis.

MCER004A – JANUARY 1995 – REVISED JANUARY 1997

JT (R-GDIP-T)** **CERAMIC DUAL-IN-LINE**

24 LEADS SHOWN

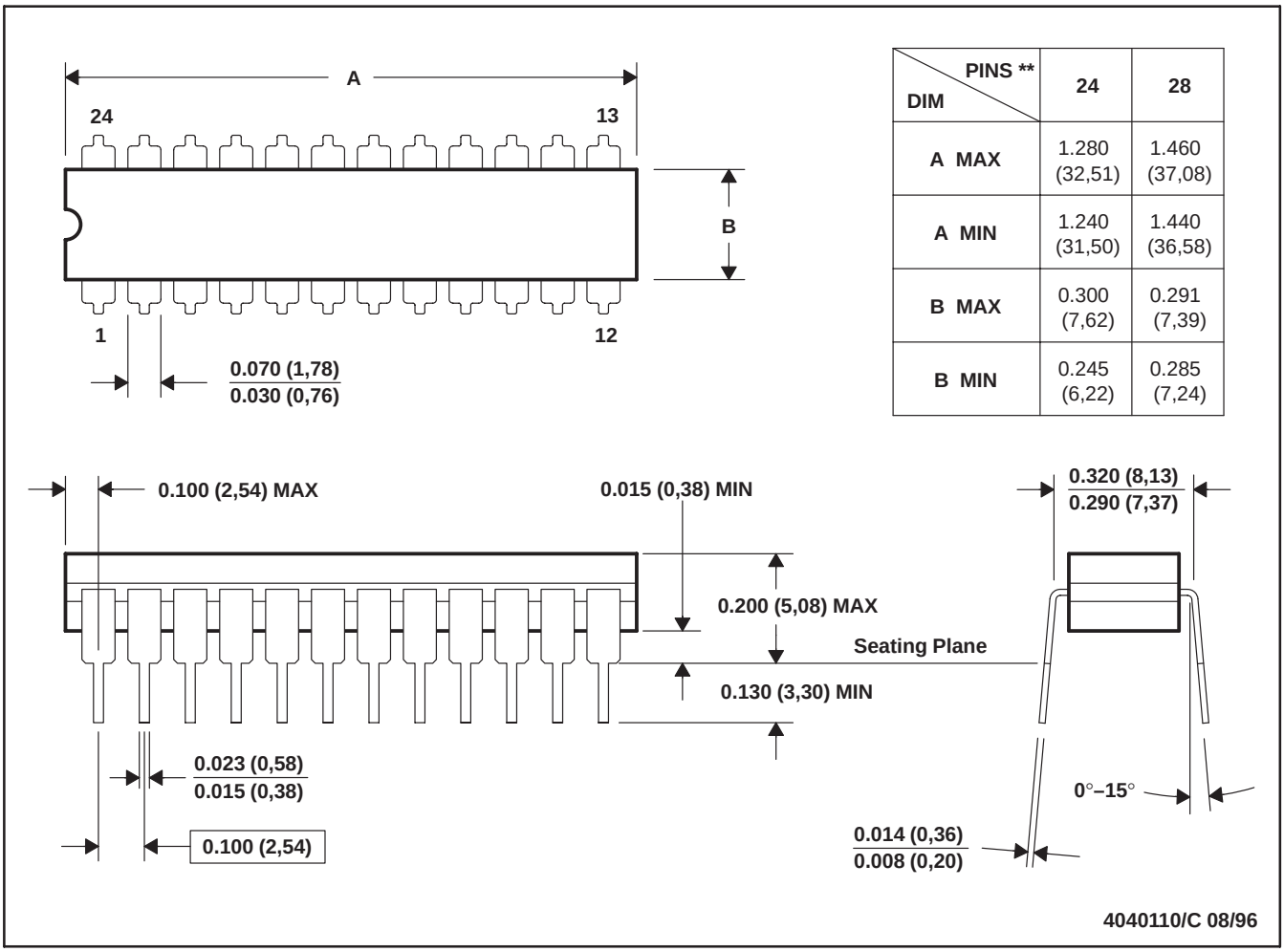

DIM \ PINS **	24	28
A MAX	1.280 (32,51)	1.460 (37,08)
A MIN	1.240 (31,50)	1.440 (36,58)
B MAX	0.300 (7,62)	0.291 (7,39)
B MIN	0.245 (6,22)	0.285 (7,24)

NOTES: A. All linear dimensions are in inches (millimeters).
B. This drawing is subject to change without notice.
C. This package can be hermetically sealed with a ceramic lid using glass frit.
D. Index point is provided on cap for terminal identification.
E. Falls within MIL STD 1835 GDIP3-T24, GDIP4-T28, and JEDEC MO-058 AA, MO-058 AB

FK (S–CQCC–N**) LEADLESS CERAMIC CHIP CARRIER

28 TERMINAL SHOWN

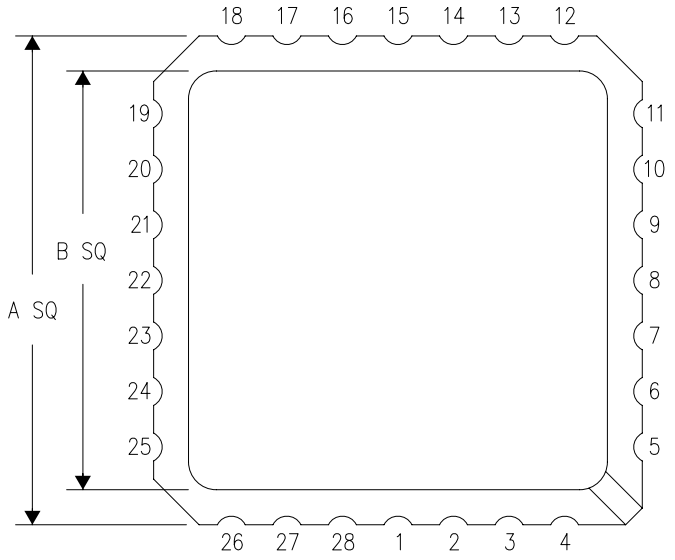

NO. OF TERMINALS **	A		B	
	MIN	MAX	MIN	MAX
20	0.342 (8,69)	0.358 (9,09)	0.307 (7,80)	0.358 (9,09)
28	0.442 (11,23)	0.458 (11,63)	0.406 (10,31)	0.458 (11,63)
44	0.640 (16,26)	0.660 (16,76)	0.495 (12,58)	0.560 (14,22)
52	0.740 (18,78)	0.761 (19,32)	0.495 (12,58)	0.560 (14,22)
68	0.938 (23,83)	0.962 (24,43)	0.850 (21,6)	0.858 (21,8)
84	1.141 (28,99)	1.165 (29,59)	1.047 (26,6)	1.063 (27,0)

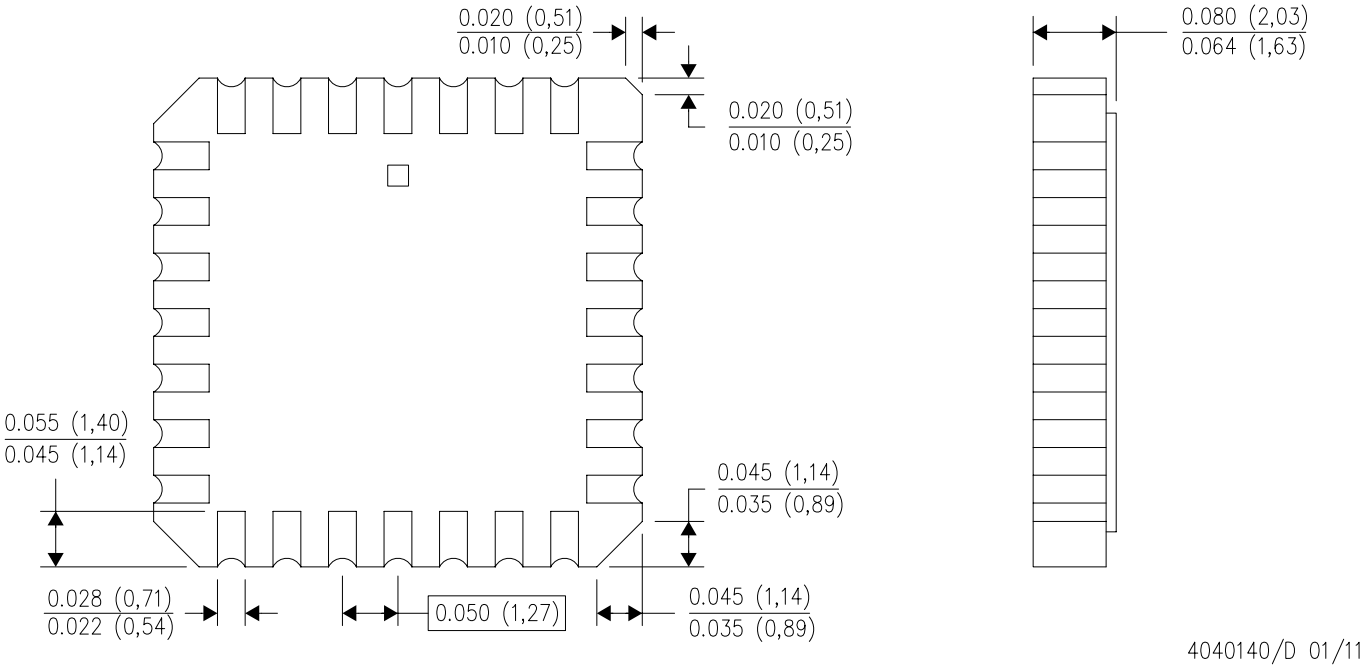

4040140/D 01/11

NOTES:
A. All linear dimensions are in inches (millimeters).
B. This drawing is subject to change without notice.
C. This package can be hermetically sealed with a metal lid.
D. Falls within JEDEC MS–004

IMPORTANT NOTICE

Texas Instruments Incorporated and its subsidiaries (TI) reserve the right to make corrections, enhancements, improvements and other changes to its semiconductor products and services per JESD46, latest issue, and to discontinue any product or service per JESD48, latest issue. Buyers should obtain the latest relevant information before placing orders and should verify that such information is current and complete. All semiconductor products (also referred to herein as “components”) are sold subject to TI’s terms and conditions of sale supplied at the time of order acknowledgment.

TI warrants performance of its components to the specifications applicable at the time of sale, in accordance with the warranty in TI’s terms and conditions of sale of semiconductor products. Testing and other quality control techniques are used to the extent TI deems necessary to support this warranty. Except where mandated by applicable law, testing of all parameters of each component is not necessarily performed.

TI assumes no liability for applications assistance or the design of Buyers’ products. Buyers are responsible for their products and applications using TI components. To minimize the risks associated with Buyers’ products and applications, Buyers should provide adequate design and operating safeguards.

TI does not warrant or represent that any license, either express or implied, is granted under any patent right, copyright, mask work right, or other intellectual property right relating to any combination, machine, or process in which TI components or services are used. Information published by TI regarding third-party products or services does not constitute a license to use such products or services or a warranty or endorsement thereof. Use of such information may require a license from a third party under the patents or other intellectual property of the third party, or a license from TI under the patents or other intellectual property of TI.

Reproduction of significant portions of TI information in TI data books or data sheets is permissible only if reproduction is without alteration and is accompanied by all associated warranties, conditions, limitations, and notices. TI is not responsible or liable for such altered documentation. Information of third parties may be subject to additional restrictions.

Resale of TI components or services with statements different from or beyond the parameters stated by TI for that component or service voids all express and any implied warranties for the associated TI component or service and is an unfair and deceptive business practice. TI is not responsible or liable for any such statements.

Buyer acknowledges and agrees that it is solely responsible for compliance with all legal, regulatory and safety-related requirements concerning its products, and any use of TI components in its applications, notwithstanding any applications-related information or support that may be provided by TI. Buyer represents and agrees that it has all the necessary expertise to create and implement safeguards which anticipate dangerous consequences of failures, monitor failures and their consequences, lessen the likelihood of failures that might cause harm and take appropriate remedial actions. Buyer will fully indemnify TI and its representatives against any damages arising out of the use of any TI components in safety-critical applications.

In some cases, TI components may be promoted specifically to facilitate safety-related applications. With such components, TI’s goal is to help enable customers to design and create their own end-product solutions that meet applicable functional safety standards and requirements. Nonetheless, such components are subject to these terms.

No TI components are authorized for use in FDA Class III (or similar life-critical medical equipment) unless authorized officers of the parties have executed a special agreement specifically governing such use.

Only those TI components which TI has specifically designated as military grade or “enhanced plastic” are designed and intended for use in military/aerospace applications or environments. Buyer acknowledges and agrees that any military or aerospace use of TI components which have ***not*** been so designated is solely at the Buyer's risk, and that Buyer is solely responsible for compliance with all legal and regulatory requirements in connection with such use.

TI has specifically designated certain components as meeting ISO/TS16949 requirements, mainly for automotive use. In any case of use of non-designated products, TI will not be responsible for any failure to meet ISO/TS16949.

Products		**Applications**	
Audio	www.ti.com/audio	Automotive and Transportation	www.ti.com/automotive
Amplifiers	amplifier.ti.com	Communications and Telecom	www.ti.com/communications
Data Converters	dataconverter.ti.com	Computers and Peripherals	www.ti.com/computers
DLP® Products	www.dlp.com	Consumer Electronics	www.ti.com/consumer-apps
DSP	dsp.ti.com	Energy and Lighting	www.ti.com/energy
Clocks and Timers	www.ti.com/clocks	Industrial	www.ti.com/industrial
Interface	interface.ti.com	Medical	www.ti.com/medical
Logic	logic.ti.com	Security	www.ti.com/security
Power Mgmt	power.ti.com	Space, Avionics and Defense	www.ti.com/space-avionics-defense
Microcontrollers	microcontroller.ti.com	Video and Imaging	www.ti.com/video
RFID	www.ti-rfid.com		
OMAP Applications Processors	www.ti.com/omap	**TI E2E Community**	e2e.ti.com
Wireless Connectivity	www.ti.com/wirelessconnectivity		

Mailing Address: Texas Instruments, Post Office Box 655303, Dallas, Texas 75265
Copyright © 2016, Texas Instruments Incorporated