Online data sheet



THTS-1AAC50506MZ

THTS

TEMPERATURE SENSORS

SICK
Sensor Intelligence.



Illustration may differ

Ordering information

Type	Part no.
THTS-1AAC50506MZ	6047714

Other models and accessories ➜ www.sick.com/THTS

Detailed technical data

Features

Measuring range	–50 °C +150 °C
Sensor element	Pt100, Pt1000 (for 4 mA ... 20 mA version)
Analog signal output and ohmic load R_A	4 mA ... 20 mA, 2-wire ($R_A \leq (L^+ - 10\ V) / 0.023\ A$ [Ohm])

Performance

Accuracy of sensor element	Class A according to IEC 60751 [1]
Transmitter accuracy	± 0,25 K
Transmitter linearity	≤ ± 0.1 % of span
Response time	$t_{50} \leq 3,3$ s $t_{90} \leq 9,7$ s [2]

[1] Class B (measuring range –50 ° C ... –30 ° C).

[2] Depending on sensor configuration, according to IEC 60751.

Mechanics/electronics

Process connection	Clamp (ISO 2852) DN 40, DN 51
Insertion length/diameter of probe	50 mm / 6 mm
Wetted parts	Stainless steel 1.4435 / 316L, $R_a \leq 0.8$ µm
Pressure resistance	Max. 16 bar at room temperature
Housing material	Stainless steel (CrNi)
Electrical connection	Round connector M12 x 1, 4-pin, IP 67 and IP 69 [1]
Supply voltage	10 V DC ... 35 V DC
Maximum current consumption	Ca. 30 mA
Electrical safety	Protection class: III, dielectric strength: 500 V AC, Reverse polarity protection: L^+ to M
Protection class III	✓
CE-conformity	2004/108/EC, EN 61326-2-3
RoHS certificate	✓
Initialization time	Max. 4 s

[1] IP enclosure rating as per IEC 60529. The enclosure rating classes specified only apply while the device is connected with male cable connectors of the corresponding enclosure rating.

Ambient data

Ambient temperature	–40 °C ... +85 °C
Storage and transport temperature	–40 °C ... +85 °C
Shock resistance	50 g, 6ms (according to IEC 60068-2-27)
Relative humidity	100 % [1]

[1], Condensation allowed.

Classifications

ECl@ss 5.0	27200208
ECl@ss 5.1.4	27200208
ECl@ss 6.0	27200208
ECl@ss 6.2	27200208
ECl@ss 7.0	27200208
ECl@ss 8.0	27200208
ECl@ss 8.1	27200208
ECl@ss 9.0	27200208
ETIM 5.0	EC001446
ETIM 6.0	EC001446
UNSPSC 16.0901	41112211

Dimensional drawing (Dimensions in mm (inch))

Clamp connection

Pt100, 4 mA...20 mA,
up to 150 °C

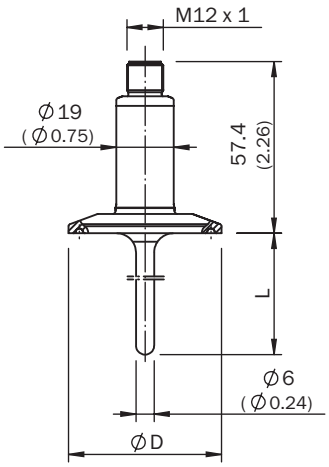

Pt100, 4 mA...20 mA,
up to 250 °C

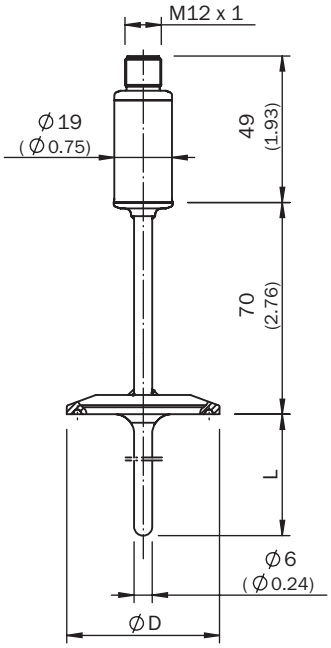

All dimensions in mm (inch)

Design		Ø D
DIN 32676	DN 10 ... DN 20	34.0 (1.34)
	DN 25 ... DN 40	50.5 (1.99)
	DN 50	64.0 (2.52)
ISO 2852	DN 12 ... DN 21.3	34.0 (1.34)
	DN 25 ... DN 38	50.5 (1.99)
	DN 40, DN 51	64.0 (2.52)
Tri-Clamp	1", 1 ½"	50.5 (1.99)
	2"	64.0 (2.52)

Application



Connection type

Plug M12 x 1, output signal 4 mA ... 20 mA

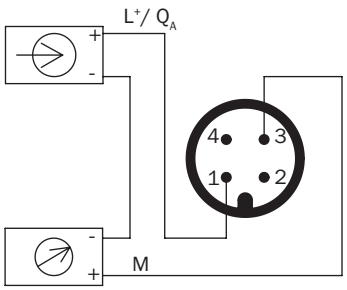

Recommended accessories

Other models and accessories ➜ www.sick.com/THTS

	Brief description	Type	Part no.
Plug connectors and cables			
	Head A: female connector, M12, 4-pin, straight Head B: cable Cable: PVC, unshielded, 2 m	DOL-1204-G02M	6009382
	Head A: female connector, M12, 4-pin, straight Head B: cable Cable: drag chain use, PUR, halogen-free, unshielded, 2 m	DOL-1204-G02MC	6025900
	Head A: female connector, M12, 4-pin, straight Head B: cable Cable: PVC, unshielded, 5 m	DOL-1204-G05M	6009866
	Head A: female connector, M12, 4-pin, straight Head B: cable Cable: drag chain use, PUR, halogen-free, unshielded, 5 m	DOL-1204-G05MC	6025901
	Head A: female connector, M12, 4-pin, straight Head B: cable Cable: PVC, unshielded, 10 m	DOL-1204-G10M	6010543

	Brief description	Type	Part no.
	Head A: female connector, M12, 4-pin, straight Head B: cable Cable: drag chain use, PUR, halogen-free, unshielded, 10 m	DOL-1204-G10MC	6025902
	Head A: female connector, M12, 4-pin, straight Head B: cable Cable: PVC, unshielded, 15 m	DOL-1204-G15M	6010753
	Head A: female connector, M12, 4-pin, angled Head B: cable Cable: PVC, unshielded, 2 m	DOL-1204-W02M	6009383
	Head A: female connector, M12, 4-pin, angled Head B: cable Cable: drag chain use, PUR, halogen-free, unshielded, 2 m	DOL-1204-W02MC	6025903
	Head A: female connector, M12, 4-pin, angled Head B: cable Cable: PVC, unshielded, 5 m	DOL-1204-W05M	6009867
	Head A: female connector, M12, 4-pin, angled Head B: cable Cable: drag chain use, PUR, halogen-free, unshielded, 5 m	DOL-1204-W05MC	6025904
	Head A: female connector, M12, 4-pin, angled Head B: cable Cable: PVC, unshielded, 10 m	DOL-1204-W10M	6010541
	Head A: female connector, M12, 4-pin, angled Head B: cable Cable: drag chain use, PUR, halogen-free, unshielded, 10 m	DOL-1204-W10MC	6025905

SICK AT A GLANCE

SICK is one of the leading manufacturers of intelligent sensors and sensor solutions for industrial applications. A unique range of products and services creates the perfect basis for controlling processes securely and efficiently, protecting individuals from accidents and preventing damage to the environment.

We have extensive experience in a wide range of industries and understand their processes and requirements. With intelligent sensors, we can deliver exactly what our customers need. In application centers in Europe, Asia and North America, system solutions are tested and optimized in accordance with customer specifications. All this makes us a reliable supplier and development partner.

Comprehensive services complete our offering: SICK LifeTime Services provide support throughout the machine life cycle and ensure safety and productivity.

For us, that is “Sensor Intelligence.”

WORLDWIDE PRESENCE:

Contacts and other locations –www.sick.com