TEXAS INSTRUMENTS

Modular THS1206EVM

User's Guide

December 2003

Data Acquistion Products

SLVU098

IMPORTANT NOTICE

Texas Instruments Incorporated and its subsidiaries (TI) reserve the right to make corrections, modifications, enhancements, improvements, and other changes to its products and services at any time and to discontinue any product or service without notice. Customers should obtain the latest relevant information before placing orders and should verify that such information is current and complete. All products are sold subject to TI's terms and conditions of sale supplied at the time of order acknowledgment.

TI warrants performance of its hardware products to the specifications applicable at the time of sale in accordance with TI's standard warranty. Testing and other quality control techniques are used to the extent TI deems necessary to support this warranty. Except where mandated by government requirements, testing of all parameters of each product is not necessarily performed.

TI assumes no liability for applications assistance or customer product design. Customers are responsible for their products and applications using TI components. To minimize the risks associated with customer products and applications, customers should provide adequate design and operating safeguards.

TI does not warrant or represent that any license, either express or implied, is granted under any TI patent right, copyright, mask work right, or other TI intellectual property right relating to any combination, machine, or process in which TI products or services are used. Information published by TI regarding third−party products or services does not constitute a license from TI to use such products or services or a warranty or endorsement thereof. Use of such information may require a license from a third party under the patents or other intellectual property of the third party, or a license from TI under the patents or other intellectual property of TI.

Reproduction of information in TI data books or data sheets is permissible only if reproduction is without alteration and is accompanied by all associated warranties, conditions, limitations, and notices. Reproduction of this information with alteration is an unfair and deceptive business practice. TI is not responsible or liable for such altered documentation.

Resale of TI products or services with statements different from or beyond the parameters stated by TI for that product or service voids all express and any implied warranties for the associated TI product or service and is an unfair and deceptive business practice. TI is not responsible or liable for any such statements.

Following are URLs where you can obtain information on other Texas Instruments products & application solutions:

Products		**Applications**	
Amplifiers	amplifier.ti.com	Audio	www.ti.com/audio
Data Converters	dataconverter.ti.com	Automotive	www.ti.com/automotive
DSP	dsp.ti.com	Broadband	www.ti.com/broadband
Interface	interface.ti.com	Digital Control	www.ti.com/digitalcontrol
Logic	logic.ti.com	Military	www.ti.com/military
Power Mgmt	power.ti.com	Optical Networking	www.ti.com/opticalnetwork
Microcontrollers	microcontroller.ti.com	Secruity	www.ti.com/security
		Telephony	www.ti.com/telephony
		Video & Imaging	www.ti.com/video
		Wireless	www.ti.com/wireless

Mailing Address:
Texas Instruments
Post Office Box 655303
Dallas, Texas 75265

Copyright © 2003, Texas Instruments Incorporated

EVM IMPORTANT NOTICE

Texas Instruments (TI) provides the enclosed product(s) under the following conditions:

This evaluation kit being sold by TI is intended for use for **ENGINEERING DEVELOPMENT OR EVALUATION PURPOSES ONLY** and is not considered by TI to be fit for commercial use. As such, the goods being provided may not be complete in terms of required design-, marketing-, and/or manufacturing-related protective considerations, including product safety measures typically found in the end product incorporating the goods. As a prototype, this product does not fall within the scope of the European Union directive on electromagnetic compatibility and therefore may not meet the technical requirements of the directive.

Should this evaluation kit not meet the specifications indicated in the EVM User's Guide, the kit may be returned within 30 days from the date of delivery for a full refund. THE FOREGOING WARRANTY IS THE EXCLUSIVE WARRANTY MADE BY SELLER TO BUYER AND IS IN LIEU OF ALL OTHER WARRANTIES, EXPRESSED, IMPLIED, OR STATUTORY, INCLUDING ANY WARRANTY OF MERCHANTABILITY OR FITNESS FOR ANY PARTICULAR PURPOSE.

The user assumes all responsibility and liability for proper and safe handling of the goods. Further, the user indemnifies TI from all claims arising from the handling or use of the goods. Please be aware that the products received may not be regulatory compliant or agency certified (FCC, UL, CE, etc.). Due to the open construction of the product, it is the user's responsibility to take any and all appropriate precautions with regard to electrostatic discharge.

EXCEPT TO THE EXTENT OF THE INDEMNITY SET FORTH ABOVE, NEITHER PARTY SHALL BE LIABLE TO THE OTHER FOR ANY INDIRECT, SPECIAL, INCIDENTAL, OR CONSEQUENTIAL DAMAGES.

TI currently deals with a variety of customers for products, and therefore our arrangement with the user **is not exclusive**.

TI assumes **no liability for applications assistance, customer product design, software performance, or infringement of patents or services described herein**.

Please read the EVM User's Guide and, specifically, the EVM Warnings and Restrictions notice in the EVM User's Guide prior to handling the product. This notice contains important safety information about temperatures and voltages. For further safety concerns, please contact the TI application engineer.

Persons handling the product must have electronics training and observe good laboratory practice standards.

No license is granted under any patent right or other intellectual property right of TI covering or relating to any machine, process, or combination in which such TI products or services might be or are used.

Mailing Address:

Texas Instruments
Post Office Box 655303
Dallas, Texas 75265

Copyright © 2003, Texas Instruments Incorporated

EVM WARNINGS AND RESTRICTIONS

It is important to operate this EVM within the input voltage range of 3.3 to 5 VDC and the output voltage range of 0−5VDC.

Exceeding the specified input range may cause unexpected operation and/or irreversible damage to the EVM. If there are questions concerning the input range, please contact a TI field representative prior to connecting the input power.

Applying loads outside of the specified output range may result in unintended operation and/or possible permanent damage to the EVM. Please consult the EVM User's Guide prior to connecting any load to the EVM output. If there is uncertainty as to the load specification, please contact a TI field representative.

During normal operation, some circuit components may have case temperatures greater than 30°C. The EVM is designed to operate properly with certain components above 85°C as long as the input and output ranges are maintained. These components include but are not limited to linear regulators, switching transistors, pass transistors, and current sense resistors. These types of devices can be identified using the EVM schematic located in the EVM User's Guide. When placing measurement probes near these devices during operation, please be aware that these devices may be very warm to the touch.

Mailing Address:

Texas Instruments
Post Office Box 655303
Dallas, Texas 75265

Copyright © 2003, Texas Instruments Incorporated

Preface

Read This First

About This Manual

This user's guide describes the characteristics, operation of the EVM. The Modular THS1206EVM is used to evaluate the 10/12-bit, 2−4 Channel, 6−8 MSPS, THS1206 family of parallel analog to digital converters. A complete circuit description, as well as schematic diagram and bill of materials are included.

How to Use This Manual

This document contains the following chapters:

- ❏ Chapter 1—EVM Overview
- ❏ Chapter 2—Analog and Digital Interface
- ❏ Chapter 3—Power Supplies
- ❏ Chapter 4—EVM Operation
- ❏ Chapter 5—EVM Bill of Materials and Schematic

Related Documentation From Texas Instruments

To obtain a copy of any of the following TI documents, call the Texas Instruments Literature Response Center at (800) 477−8924 or the Product Information Center (PIC) at (972) 644−5580. When ordering, identify the booklet by its title and literature number. Updated documents can also be obtained through our website at www.ti.com.

Data Sheets:	**Literature Number:**
THS10064	SLAS255
THS1007	SLAS286
THS10082	SLAS254
THS1009	SLAS287
THS1206	SLAS217
THS1207	SLAS284
THS12082	SLAS271
THS1209	SLAS288

Users Guides:	Literature Number:
5−6K Interface Board	SLAU104
DAP Signal Conditioning Board	SLAU105
Additional Resources:	**Literature Number:**
Op Amps for Everyone	SLOD006
Designing With the THS1206 High Speed Data Converter	SLAA094
Reading the Configuration Registers of the 10-Bit THS10064, THS1007, THS10082, and THS1009	SLAA143
Resetting Non-FIFO Variations of the 12-Bit THS1206	SLAA145

FCC Warning

This equipment is intended for use in a laboratory test environment only. It generates, uses, and can radiate radio frequency energy and has not been tested for compliance with the limits of computing devices pursuant to subpart J of part 15 of FCC rules, which are designed to provide reasonable protection against radio frequency interference. Operation of this equipment in other environments may cause interference with radio communications, in which case the user at his own expense will be required to take whatever measures may be required to correct this interference.

Trademarks

C5000 and C6000 DSP platforms are trademarks of Texas Instruments. All other trademarks are the property of their respective owners.

Contents

1 EVM Overview 1-1
1.1 Features 1-2
1.2 Introduction 1-2

2 Analog and Digital Interface 2-1
2.1 Analog Interface 2-2
2.2 Digital Interface 2-3
2.2.1 Parallel Control 2-3
2.2.2 Parallel Data 2-4
2.2.3 Two-Channel Device Options 2-4

3 Power Supplies 3-1
3.1 Requirements 3-2
3.2 Reference Voltages 3-2

4 EVM Operation 4-1

5 EVM Bill of Materials and Schematic 5-1

Chapter 1

EVM Overview

This chapter provides a concise overview of the EVM.

Topic **Page**

1.1 Features 1-2

1.2 Introduction 1-2

1.1 Features

- ❑ Full-featured evaluation board for the THS1206 family of high-speed, simultaneous sampling analog to digital converters
- ❑ Analog inputs can be configured as single-ended or differential
- ❑ Built-in reference
- ❑ High-speed parallel interface
- ❑ Compatible with the 5-6K Interface Card for use with a variety of DSP Starter Kits

1.2 Introduction

The THS1206 family consists of high-speed, low-power, 10- and 12-bit A/D converters that operate from independent 5 V Avdd and 3.0–5.25 V DVdd supplies. Independent buffer supply BVdd eliminates the need for level-shifting circuitry when the device is used with low voltage host controllers.

One common PWB can accommodate all eight devices of the THS1206 family of data converters. This includes 10- and 12-bit, two and four channel devices operating up to a maximum sampling rate of 8MSPS. The EVM layout shows the pin compatibility and upgrade path possibilities from the 10 bit, two channel THS10082 to the 12-bit four-channel THS1206.

Chapter 2

Analog and Digital Interface

This chapter provides a description of the analog and digital interfaces to the Modular THS1206EVM.

Topic **Page**

2.1 Analog Interface 2-2
2.2 Digital Interface 2-3

2.1 Analog Interface

For maximum flexibility, the Modular THS1206EVM is designed for easy interfacing to multiple analog sources. Samtec part numbers SSW-110-22-F-D-VS-K and TSM-110-01-T-DV-P provide a convenient ten-pin dual row header/socket combination at J1. This header/socket provides access to the analog input pins of the ADC. Consult Samtec at www.samtec.com or call 1-800-SAMTEC-9 for a variety of mating connector options. The following table shows the pin out of the analog input connector, J1.

Pin Number	Signal	Description
J1.2	AINp	Non-inverting Input A – SE Channel 0
J1.4	AINm	Inverting input A – SE Channel 1
J1.6	BINp	Non-inverting input B – SE Channel 2
J1.8	BINm	Inverting input B – SE Channel 3
J1.10−J1.16	Unused	Pins are unused and should be left open for use with future amplifier and sensor input modules.
J1.18	REF(−)	External REFM source input (1.5 V NOM)
J1.20	REF(+)	External REFP source input (3.5 V NOM)
J1.15	REFOUT	Optional connection via W11. Provides external AFE circuitry with REFOUT bias voltage.
J1.1− J1.19 (odd)	AGND	Analog ground connections. Note J1.15 is used for REFOUT connections to external AFE circuitry.

The analog front-end (AFE) circuitry found on the EVM consists of a simple RC filter. When used in combination with the 5-6K interface card, the circuits found on both DAP signal conditioning boards (see SLAU105) provide the level shifting and amplifier configurations to realize single ended or differential mode operation of the analog to digital converter installed on the EVM.

2.2 Digital Interface

The Modular THS1206EVM is designed for easy interfacing to multiple control platforms. Jumper options are provided on the EVM to allow direct control over the state of chip select pins (/CS0 and CS1) as well as the /RD pin.

Jumper W4 controls the signal applied to the active low $\overline{CS0}$ pin. By completely removing the shunt jumper located at W4, the $\overline{CS0}$ pin is pulled low via a 10K resistor R10. Used in combination with U2, an SN74AHC138 address decoder, W4 allows the $\overline{CS0}$ signal to be controlled by one of three different addresses. Having the ability to select the address location of the ADC provides the possibility of *stacking* additional parallel ADC or DAC boards with the Modular THS1206EVM.

Jumpers W2 and W3 control signals applied to the $\overline{RD}$ and CS1 pins of the data converter. Closing the jumpers allows the signals to be applied via the parallel control connector J2. Opening the jumpers provides a logic high signal through pull up resistors R6 and R7.

2.2.1 Parallel Control

Samtec part numbers SSW-110-22-F-D-VS-K and TSM-110-01-T-DV-P provide a convenient ten-pin dual row header/socket combination at J2. This header/socket provides access to the digital control pins of the EVM. Consult Samtec at www.samtec.com or 1-800-SAMTEC-9 for a variety of mating connector options.

Pin Number	Signal	Description
J2.1	DC_CSa	Daughter card chip select – active low signal used to access the EVM
J2.3	$\overline{WR}$	DSP write strobe – active low signal used to initiate a conversion
J2.5	$\overline{RD}$	DSP read strobe – active low signal used to access parallel data
J2.7	EVM_A0	EVM address line 0 – used in conjunction with U2 to control $\overline{CS0}$
J2.9	EVM_A1	EVM address line 1 – used in conjunction with U2 to control $\overline{CS0}$
J2.11	EVM_A2	EVM address line 2 – used in conjunction with U2 to control $\overline{CS0}$
J2.13	EVM_A3	EVM address line 3 – used in conjunction with U2 to control $\overline{CS0}$
J2.15	EVM_A4	EVM address line 4 – not used
J2.17	TOUT	DSP timer input – optional CONVCLK or CONVST source
J2.19	INT	DSP interrupt input – connects to the ADC DATA_AV pin

2.2.2 Parallel Data

The Modular THS1206EVM uses Samtec part numbers SSW-116-22-F-D-VS-K and TSM-116-01-T-DV-P to provide a convenient 16-pin dual row header/socket combination at J3. This header/socket combination provides access to the parallel data pins of the THS1206. Data line D0 is connected to J3 pin 1. Data lines 1−11 are located on pins 3−31 respectively. Even-numbered pins (2 through 32) are connected to digital ground.

2.2.3 Two-Channel Device Options

When used with two channels devices, parallel data connector pin J3.25 is connected to the OVRFL signal found on the ADC. This is accommodated by shorting pin 2−3 of jumper W8. This allows the user to observe the FIFO over flow condition of the ADC directly through the host processor data bus.

The hardware reset pin ($\overline{\text{RST}}$) found on two channels devices can be activated by a distinct address location via U2 and EVM_A0 through EVM_A3 located on the parallel control connector J2. Reset is activated by driving all four address lines high. Reset is an asynchronous function that restores the configuration registers to their default states, and resets the FIFO read and write pointers.

Chapter 3

Power Supplies

This chapter describes the power supplies reguired to operate the Modular THS1206EVM.

Topic **Page**

3.1 Requirements 3-2

3.2 Reference Voltages 3-2

3.1 Requirements

The Modular THS1206EVM board requires 5 V dc for the analog section of the ADC. The digital supply (DVdd) and buffer supply (BVdd) can range from 3 V to 5.25 V. Since the EVM is designed to work with the 5-6K interface board, JP1 provides direct connection to the common power bus described in document number SLAU104. Jumpers W9 and W10 should be closed; jumper W6 provides BVdd options of 5.0 V or 3.3 V.

The following table shows the pin out of JP1:

Signal	Pin Number		Signal
Unused	1	2	Unused
+5VA	3	4	Unused
DGND	5	6	AGND
Unused	7	8	Unused
+3.3VD	9	10	+5VD

Alternate power sources can be applied via various test points located on the EVM. Refer to the schematic at the end of this document for details. Removing jumpers W6, W9, and W10 allow the AVdd, DVdd and BVdd voltages to be applied from completely independent, variable dc sources.

Note: While filters are provided for all power supply inputs, optimal performance of the EVM requires a clean, well-regulated power source.

3.2 Reference Voltages

The Modular THS1206EVM is configured to use its internal reference through jumper W1 (see schematic for details). If an external reference is desired, remove the shunt jumper on W1 and apply the external reference source to the test point labeled REFIN.

External voltages can also be applied to the REFM and REFP test points if the device is configured to use the external voltage option, set in configuration register one (CR1).

Chapter 4

EVM Operation

The analog input swing is 2 Vpp, centered on a 2.5 V internal or external reference. The devices accept bipolar input ranges when a level shift circuit is used in the analog front-end circuitry. Refer to Section 12 of *Op Amps for Everyone* (SLOD006) for information on various circuit applications.

Once power is applied to the EVM, the analog input source can be connected directly to J1 (top or bottom side) or through optional amplifier and signal conditioning modules using the 5−6K interface board. The analog input level should not exceed 2.0 Vp-p. The analog input range is from REFM to REFP (2 Vpp) centered at 2.5 V.

The digital control signals can be applied directly to J2 (top or bottom side). The Modular THS1206EVM can also be connected directly to the 5−6K interface board for use with a variety of C5000™ DSP platform and C6000™ DSP platform starter kits (DSK). The parallel control and data connectors are designed to allow pattern generators and/or logic analyzers to be connected to the EVM using standard ribbon type cables on 0.1-inch centers.

No specific evaluation software is provided with this EVM. However, various code examples are available that show how to use this EVM with a variety of digital signal processors from Texas Instruments. Check the product folders or send e-mail to dataconvapps@list.ti.com for a listing of available code examples. The EVM Gerber files are available on request.

Chapter 5

EVM Bill of Materials and Schematic

The following table contains a complete bill of materials for the Modular THS1206EVM. The schematic diagram is also provided for reference.

Designators	Description	Manufacturer	Mfg. Part Number
C1 C2 C3 C4 C5 C14	10 µF, A case, tantalum, 10 V	Panasonic	ECS-T1AY106R
C6 C7 C8 C9	10 µF, B case, tantalum, 20 V	Panasonic	ECS-T1DX106R
C10 C11 C12 C13	0.1 µF, 0805, ceramic, X7R, 50 V, 10%	Panasonic	ECJ-2YB1H104K
C15 C16 C17 C18	1 nF, 0805, ceramic, X7R, 50 V, 10%	Panasonic	ECJ-2VB1H102K
J1 J2 J5 (top side)	10 Pin, dual-row SMT header (20 positive)	Samtec	TSM-110-01-T-DV-P
J1 J2 J5 (bottom side)	10 Pin, dual-row SMT socket (20 positive)	Samtec	SSW-110-22-F-D-VS-K
J3 (top side)	16 Pin, dual-row SMT header (32 positive)	Samtec	TSM-116-01-T-DV-P
J3 (bottom side)	16 Pin, dual-row SMT socket (32 positive)	Samtec	SSW-116-22-F-D-V-K
J4	Not installed		
JP1 (top side)	5 Pin, dual-row, SMT header (10 positive)	Samtec	TSM-105-0-T-D-P
JP1 (bottom side)	5 Pin, dual-row, SMT socket (10 positive)	Samtec	SSW-105-22-F-D-VS-K
L1 L2	15 µH inductor, SMT, 1608 series	Inductors, Inc.	CTDS1608C-153
R6 R7 R10	10 KΩ, 0805, 5%, 0.1 W resistor	Yageo America	9C08052A1002JLHFT
R1 R2 R3 R4 R5	49.9 Ω, 0805, 1% 0.1 W resistor	Yageo America	9C08052A49R9FKHFT
R8	0 Ω, 0805, 0.1 W resistor	Yageo America	9C08052A0R00JLHFT
Various	Red test point loop	Keystone	5000
Various	Black test point loop	Keystone	5001
U1	THS1206	TI	See NOTE
U2	SN74AHC138	TI	SN74AHC138D
W1 W2 W3 W9 W10 W11	2 Pin , 0.1-inch header	Samtec	TSW-102-07-L-S
W4	3 Pin, dual-row, TH header (6 positive)	Samtec	TSW-103-07-L-D
W5 W6	3 Pin , 0.1-inch header	Samtec	TSW-103-07-L-S

Note: U1 may be replaced with THS1064CDA, THS1007CDA, THS10082CDA, THS1009CDA, THS1207CDA, THS12082CDA, or THS1209CDA as required.

Revision History		
REV	ECN Number	Approved
A	Initial Release	TH

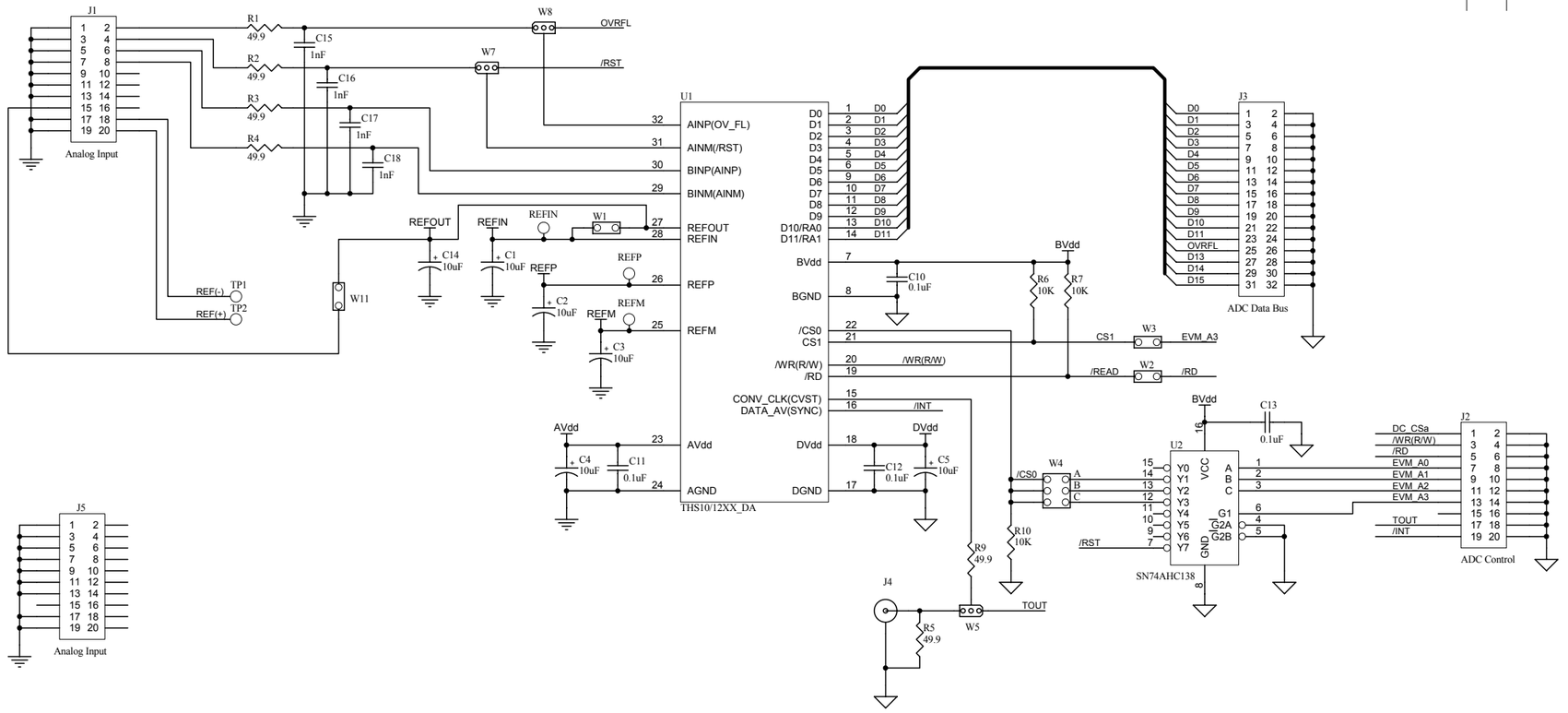

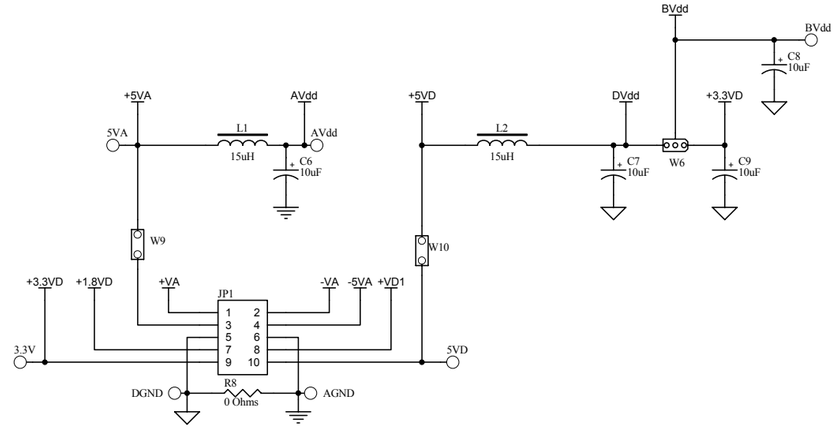

Engineer:	Tom Hendrick
Drawn By:	Tom Hendrick
FILE:	6453219.sch

TEXAS INSTRUMENTS

12500 TI Boulevard. Dallas, Texas 75243

Title: THS1206 Modular EVM

DOCUMENTCONTROL # EDGE No. 6453219 REV: A

DATE: 2-Aug-2003 SIZE: SHEET: 1 OF: 1