TG37
MIL-C-26500 and MIL-C-83723 Series III
Connector Wrench

TG47 - 20 N

- **TG47** — Basic Part Number
- **20** — Shell Size
- **N** — Polarization
  N - Normal
  6, 7, 8, 9 or 10 (See Note 3)

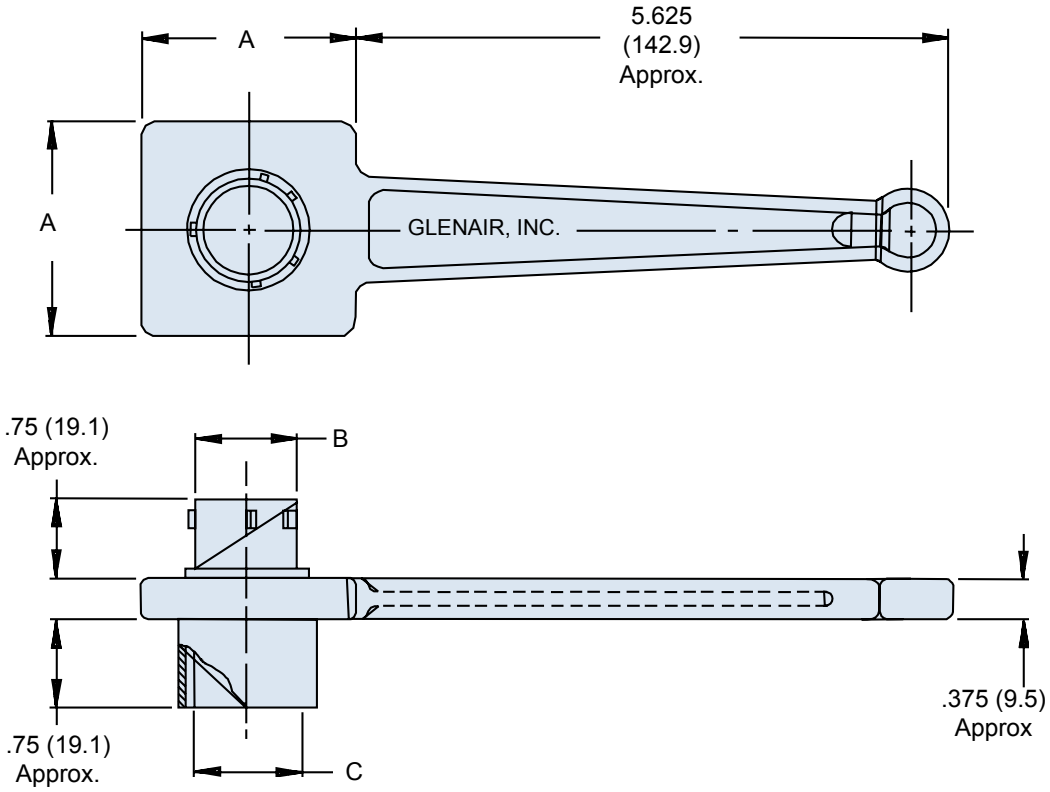

Shell Size	A Dim. ± .062 (1.6)	B Dia. Ref.	C Dia. Ref.
8	1.250 (31.8)	.424 (10.8)	.428 (10.9)
10	1.250 (31.8)	.526 (13.4)	.530 (13.5)
12	1.250 (31.8)	.696 (17.7)	.700 (17.8)
14	2.000 (50.8)	.765 (19.4)	.769 (19.5)
16	2.000 (50.8)	.892 (22.7)	.896 (22.8)
18	2.000 (50.8)	.998 (25.3)	1.002 (25.5)
20	2.000 (50.8)	1.123 (28.5)	1.127 (28.6)
22	2.000 (50.8)	1.248 (31.7)	1.252 (31.8)
24	2.000 (50.8)	1.373 (34.9)	1.377 (35.0)

APPLICATION NOTES

1. Metric dimensions (mm) are indicated in parentheses.
2. Material: Aluminum alloy with electroless nickel finish.
3. Polarization 10 not available for shell size 8.
4. Wrench has been designed to be used with both threaded and bayonet style connectors.

© 2008 Glenair, Inc.