Measurement condition

Ambient temperature:	23	°C
Input power level:	0	dBm
Terminating impedance:		
Input:	50	Ω
Output:	50	Ω

Characteristics

Remark:
The maximum attenuation in the pass band is defined as the insertion loss a_e. The nominal frequency f_N is fixed at 836,5 MHz without any tolerance or limit. The values of absolute attenuation a_{abs} are guaranteed for the whole operating temperature range. The frequency shift of the filter in the operating temperature range is included in the production tolerance scheme.

tolerance scheme.

D a t a					**typ. value**		**tolerance / limit**		
Insertion loss				a_e	2,1	dB	max.	3,0	dB
Nominal frequency				f_N	-			836,5	MHz
Passband					-		f_N ±	12,5	MHz
Pass band ripple					0,7	dB	max.	1,4	dB
Absolute attenuation				a_{abs}					
0,3	MHz	…	800	MHz	33	dB	min.	28	dB
869	MHz	…	894	MHz	47	dB	min.	40	dB
894	MHz	…	1210	MHz	35	dB	min.	32	dB
1210	MHz	…	1500	MHz	30	dB	min.	25	dB
1500	MHz	…	2000	MHz	25	dB	min.	20	dB
2000	MHz	…	3000	MHz	18	dB	min.	15	dB
Return loss within PB					9	dB	min.	8	dB
Input power level					-		max.	15	dBm
Permissible DC voltage					-		max.	5	V
Operating temperature range				OTR	-		- 30 °C ... + 85		°C
Storage temperature range					-		- 40 °C ... + 85		°C
Temperature coefficient of frequency				TC_f *	t.b.d.			-	

*) $\Delta f_C(Hz) = Tc_f(ppm/K) \times (T - T_A) \times f_{CTA}$ (MHz)

Generated:

Checked / Approved:

Tele Filter GmbH
Potsdamer Straße 18
D 14 513 TELTOW / Germany
Tel: (+49) 3328 4784-0 / Fax: (+49) 3328 4784-30
E-Mail: tft@telefilter.com

VI TELEFILTER reserves the right to make changes to the product(s) and/or information contained herein without notice. No liability is assumed as a result of their use or application. No rights under any patent accompany the sale of any such product(s) or information.

Filter characteristic

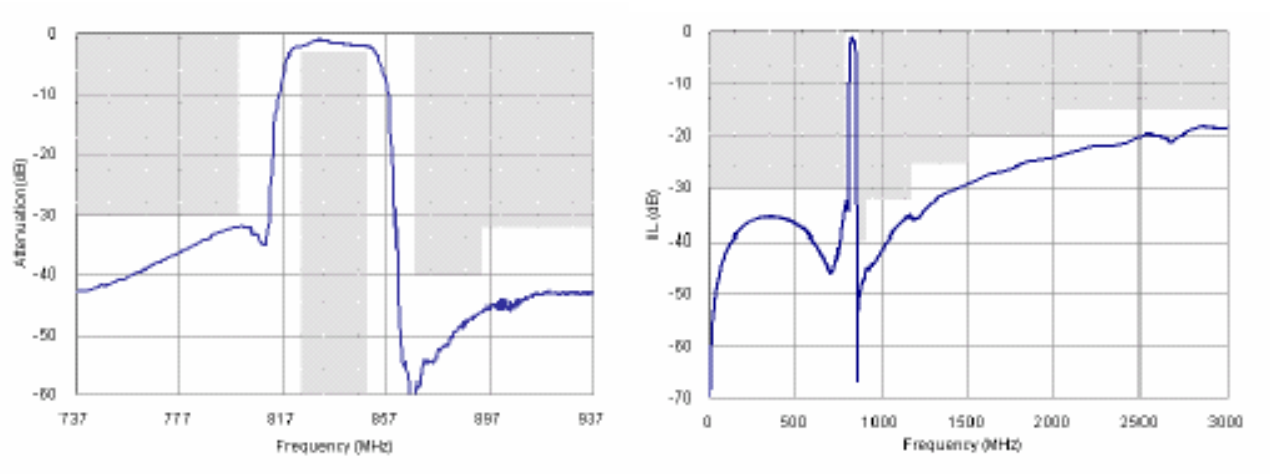

Construction and pin connection

(All dimensions in mm)

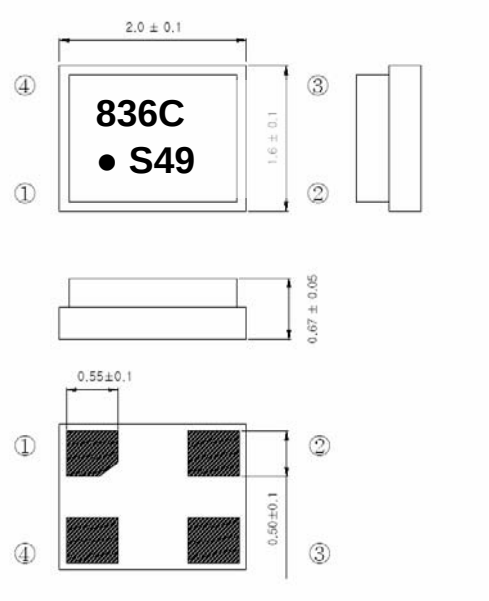

1	Input
2	Ground
3	Output
4	Ground

Date code:	Year + week
S	2004
T	2005
U	2006
...	

Test circuit

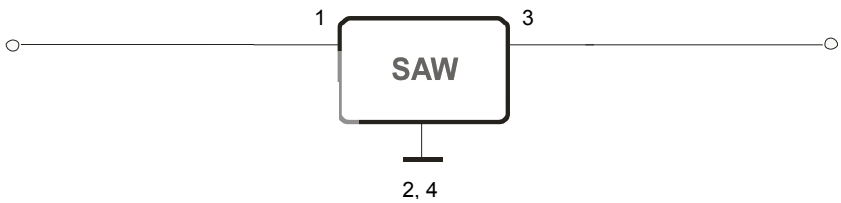

Tele Filter GmbH
Potsdamer Straße 18
D 14 513 TELTOW / Germany
Tel: (+49) 3328 4784-0 / Fax: (+49) 3328 4784-30
E-Mail: tft@telefilter.com

VI TELEFILTER reserves the right to make changes to the product(s) and/or information contained herein without notice. No liability is assumed as a result of their use or application. No rights under any patent accompany the sale of any such product(s) or information.

Stability characteristics

After the following tests the filter shall meet the whole specification:

1. Shock:	500g, 18 ms, half sine wave, 3 shocks each plane; DIN IEC 68 T2 - 27
2. Vibration:	10 Hz to 500 Hz, 0,35 mm or 5 g respectively, 1 octave per min, 10 cycles per plan, 3 plans; DIN IEC 68 T2 - 6
3. Change of temperature:	-55 °C to 125°C / 30 min. each / 10 cycles DIN IEC 68 part 2 – 14 Test N
4. Resistance to solder heat (reflow):	reflow possible: twice max.; for temperature conditions refer to the attached "Air reflow temperature conditions" on page 4;

Packing

Tape & Reel: IEC 286 – 3, with exeption of value for N and minimum bending radius;
tape type II, embossed carrier tape with top cover tape on the upper side;

max. pieces of filters peer reel:	4000
reel of empty components at start:	min. 150 mm
reel of empty components at start including leader:	min. 160 mm
trailer:	min. 150 mm

Tape (all dimensions in mm)

W	:	8,00 ± 0,3
Po	:	4,00 ± 0,1
Do	:	1,50 +0,1/-0
E	:	1,75 ± 0,1
F	:	3,50 ± 0,05
G(min)	:	0,75
P2	:	2,00 ± 0,05
P1	:	4,00 ± 0,1
D1(min)	:	1,50
Ao	:	1,79 ± 0,1
Bo	:	2,12 ± 0,1

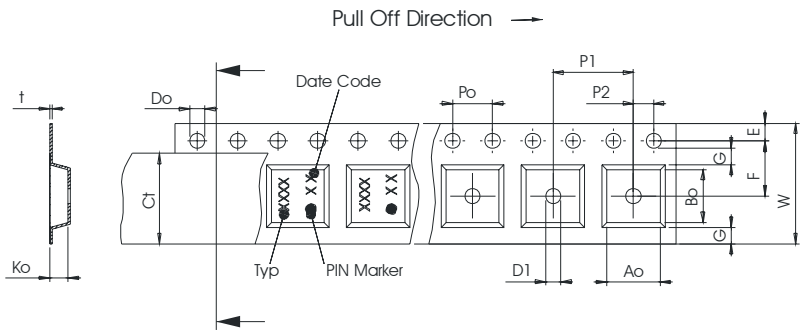

Reel (all dimensions in mm)

A	:	258
W1	:	9,0 +1,5/-0
W2(max)	:	12,3
N(min)	:	81,0
C	:	13,0 +0,5/-0,2

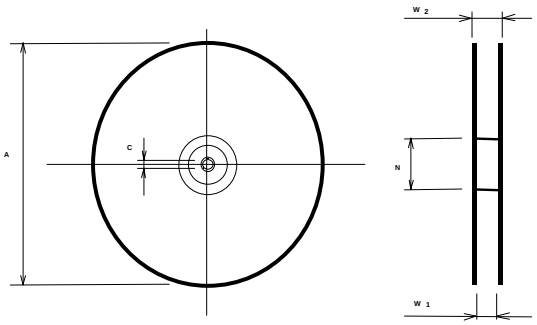

The minimum bending radius is 45 mm.

Tele Filter GmbH
Potsdamer Straße 18
D 14 513 TELTOW / Germany
Tel: (+49) 3328 4784-0 / Fax: (+49) 3328 4784-30
E-Mail: tft@telefilter.com

VI TELEFILTER reserves the right to make changes to the product(s) and/or information contained herein without notice. No liability is assumed as a result of their use or application. No rights under any patent accompany the sale of any such product(s) or information.

Air reflow temperature conditions

Conditions	Exposure
Average ramp-up rate (30°C to 217°C)	less than 3°C/second
> 100°C	between 300 and 600 seconds
> 150°C	between 240 and 500 seconds
> 217°C	between 30 and 150 seconds
Peak temperature	max. 260°C
Time within 5°C of actual peak temperature	between 10 and 30 seconds
Cool-down rate (Peak to 50°C)	less than 6°C/second
Time from 30°C to Peak temperature	no greater than 300 seconds

Chip-mount air reflow profile

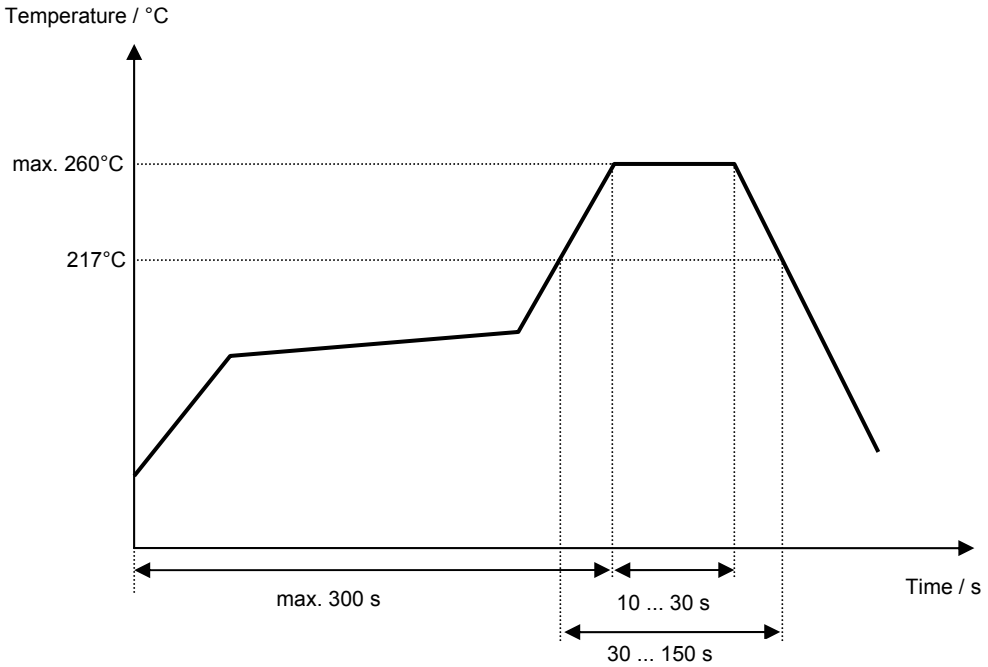

Tele Filter GmbH
Potsdamer Straße 18
D 14 513 TELTOW / Germany
Tel: (+49) 3328 4784-0 / Fax: (+49) 3328 4784-30
E-Mail: tft@telefilter.com

VI TELEFILTER reserves the right to make changes to the product(s) and/or information contained herein without notice. No liability is assumed as a result of their use or application. No rights under any patent accompany the sale of any such product(s) or information.

History

Version	Reason of Changes	Name	Date
1.0	- Generation of filter specification	Martens	29.11.2004

Tele Filter GmbH
Potsdamer Straße 18
D 14 513 TELTOW / Germany
Tel: (+49) 3328 4784-0 / Fax: (+49) 3328 4784-30
E-Mail: tft@telefilter.com

VI TELEFILTER reserves the right to make changes to the product(s) and/or information contained herein without notice. No liability is assumed as a result of their use or application. No rights under any patent accompany the sale of any such product(s) or information.