Measurement condition

Ambient temperature:	23	°C
Input power level:	0	dBm
Terminating impedance:		
Input:	50	Ω
Output:	50	Ω

Characteristics

Remark:
The maximum attenuation in the pass band is defined as the insertion loss a_e. The nominal frequency f_N is fixed at 762 MHz without any tolerance or limit. The values of absolute attenuation a_{abs} are guaranteed for the whole operating temperature range. The frequency shift of the filter in the operating temperature range is included in the production tolerance scheme.

D a t a		typ. Value		tolerance / limit		
Insertion loss within PB	a_e	2,1	dB	max.	3,0	dB
Nominal frequency	f_N	-			762	MHz
Passband	PB	-			24	MHz
Absolute attenuation	a_{abs}					
$f_N \pm$ 80 MHz ... $f_N \pm$ 149 MHz		58	dB	min.	33,5	dB
$f_N +$ 149 MHz ... $f_N +$ 300 MHz		57	dB	min.	48,5	dB
1 MHz ... 200 MHz		60	dB	min.	50,0	dB
200 MHz ... $f_N -$ 149 MHz		69	dB	min.	55,0	dB
Group delay ripple within PB	p-p	32	ns	max.	0,2	µs
IIP3	*	-		min.	35	dBm
Input power level		-		max.	10	dBm
Operating temperature range	OTR	-		- 10 °C ... + 75 °C		
Storage temperature range		-		- 40 °C ... + 85 °C		
Temperature coefficient of frequency	TC_f **	- 42	ppm/K		-	

*) $f_{in1} = f_C - 14$ MHz; $f_{in2} = f_C - 14{,}4$ MHz; P_{in}=0 dBm; $f_{measurement1} = f_C - 13{,}6$ MHz; $f_{measurement2} = f_C - 14{,}8$ MHz. The centre frequency f_C is the arithmetic mean value of the upper and lower frequencies at the 3 dB filter attenuation level relative to the insertion loss a_e.
**) $\Delta f(Hz) = TC_f(ppm/K) \times (T-T_0) \times f_{To}(MHz)$

Generated:

Checked / Approved:

Tele Filter GmbH
Potsdamer Straße 18
D 14 513 TELTOW / Germany
Tel: (+49) 3328 4784-0 / Fax: (+49) 3328 4784-30
E-Mail: tft@telefilter.com

VI TELEFILTER reserves the right to make changes to the product(s) and/or information contained herein without notice. No liability is assumed as a result of their use or application. No rights under any patent accompany the sale of any such product(s) or information.

Filter characteristic

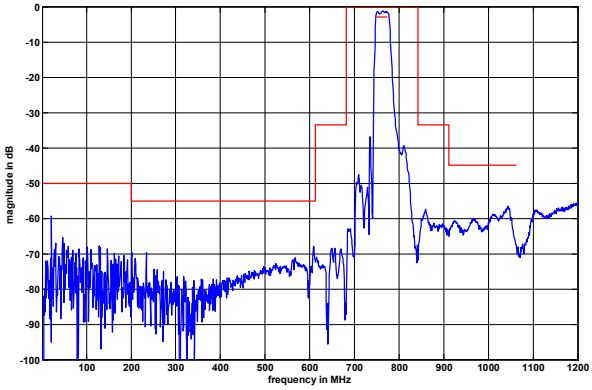

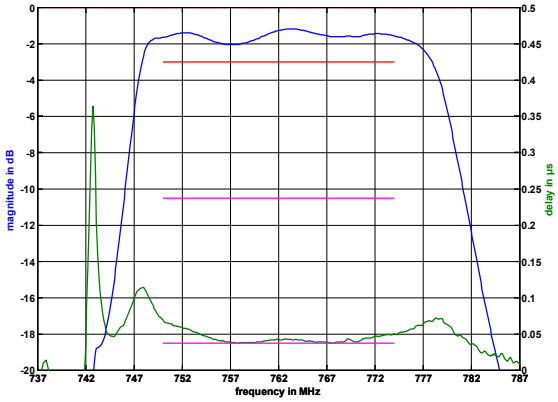

Construction and pin connection

(All dimensions in mm)

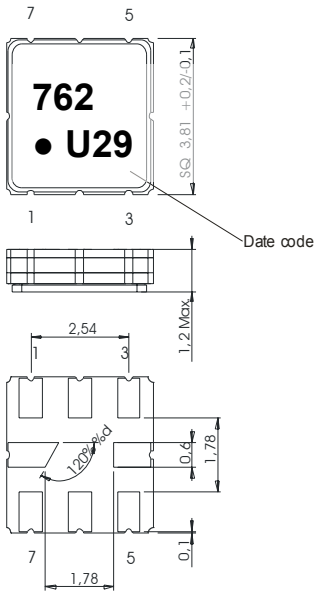

1	Ground
2	Input
3	Ground
4	Ground
5	Ground
6	Output
7	Ground
8	Ground

Date code:	Year + week
U	2006
V	2007
W	2008
...	

50 Ω Test circuit

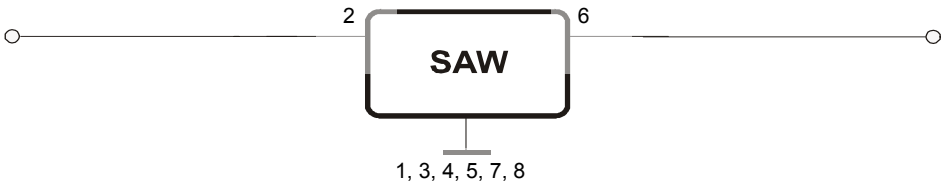

Tele Filter GmbH
Potsdamer Straße 18
D 14 513 TELTOW / Germany
Tel: (+49) 3328 4784-0 / Fax: (+49) 3328 4784-30
E-Mail: tft@telefilter.com

VI TELEFILTER reserves the right to make changes to the product(s) and/or information contained herein without notice. No liability is assumed as a result of their use or application. No rights under any patent accompany the sale of any such product(s) or information.

Stability characteristics, reliability

After the following tests the filter shall meet the whole specification:

1. Shock:	500g, 1 ms, half sine wave, 3 shocks each plane; DIN IEC 68 T2 - 27
2. Vibration:	10 Hz to 500 Hz, 0,35 mm or 5 g respectively, 1 octave per min, 10 cycles per plan, 3 plans; DIN IEC 68 T2 - 6
3. Change of temperature:	-55 °C to 125°C / 30 min. each / 10 cycles DIN IEC 68 part 2 – 14 Test N
4. Resistance to solder heat (reflow):	reflow possible: three times max.; for temperature conditions refer to the attached "Air reflow temperature conditions" on page 4;

This filter is RoHS compliant (2002/95/EG, 2005/618/EG)

Packing

Tape & Reel: IEC 286 – 3, with exception of value for N and minimum bending radius;
tape type II, embossed carrier tape with top cover tape on the upper side;

max. pieces of filters per reel:	3000
reel of empty components at start:	min. 300 mm
reel of empty components at start including leader:	min. 500 mm
trailer:	min. 300 mm

Tape (all dimensions in mm)

W	: 12,00	± 0,3
Po	: 4,00	± 0,1
Do	: 1,50	+0,1/-0
E	: 1,75	± 0,1
F	: 5,50	± 0,05
G(min)	: 0,75	
P2	: 2,00	± 0,05
P1	: 8,00	± 0,1
D1(min)	: 1,50	
Ao	: 4,30	± 0,1
Bo	: 4,30	± 0,1
Ct	: 9,5	± 0,1

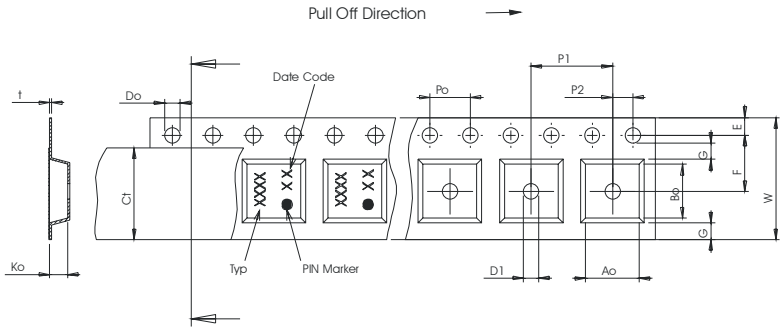

Reel (all dimensions in mm)

A	:330	
W1	: 12,4	+2/-0
W2(max)	: 18,4	
N(min)	: 50	
C	: 13,0	+0,5/-0,2

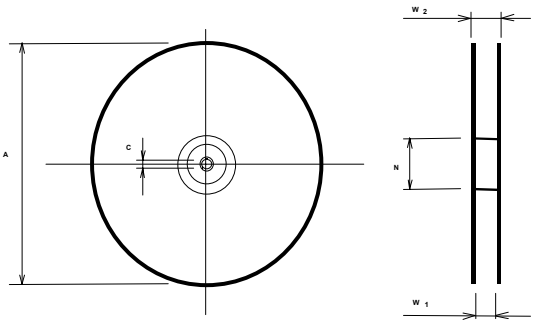

The minimum bending radius is 45 mm.

Tele Filter GmbH
Potsdamer Straße 18
D 14 513 TELTOW / Germany
Tel: (+49) 3328 4784-0 / Fax: (+49) 3328 4784-30
E-Mail: tft@telefilter.com

VI TELEFILTER reserves the right to make changes to the product(s) and/or information contained herein without notice. No liability is assumed as a result of their use or application. No rights under any patent accompany the sale of any such product(s) or information.

Air reflow temperature conditions

Conditions	Exposure
Average ramp-up rate (30°C to 217°C)	less than 3°C/second
> 100°C	between 300 and 600 seconds
> 150°C	between 240 and 500 seconds
> 217°C	between 30 and 150 seconds
Peak temperature	max. 260°C
Time within 5°C of actual peak temperature	between 10 and 30 seconds
Cool-down rate (Peak to 50°C)	less than 6°C/second
Time from 30°C to Peak temperature	no greater than 300 seconds

Chip-mount air reflow profile

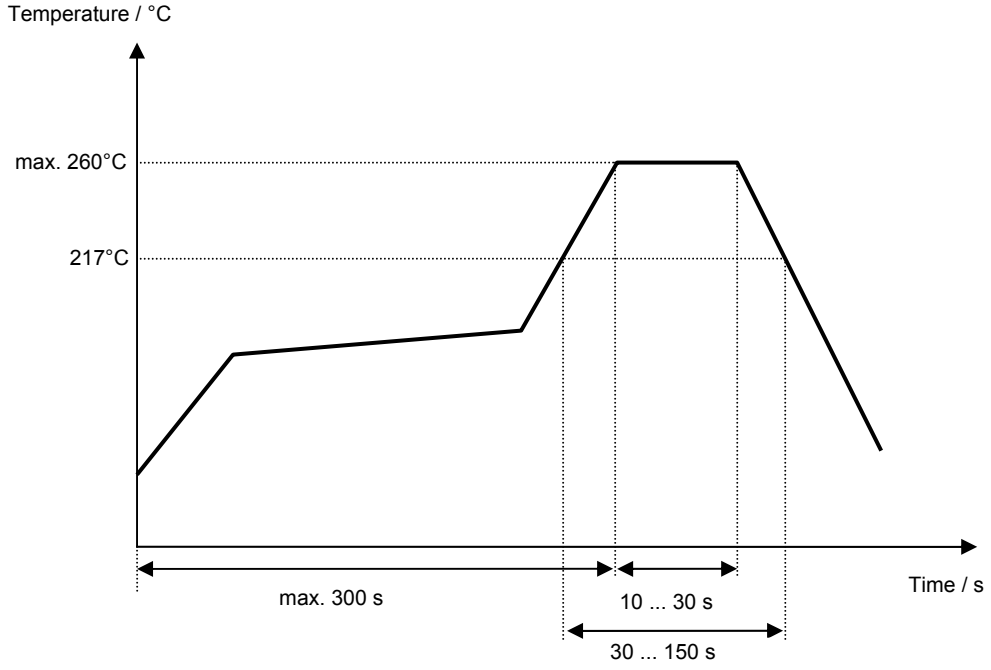

Tele Filter GmbH
Potsdamer Straße 18
D 14 513 TELTOW / Germany
Tel: (+49) 3328 4784-0 / Fax: (+49) 3328 4784-30
E-Mail: tft@telefilter.com

VI TELEFILTER reserves the right to make changes to the product(s) and/or information contained herein without notice. No liability is assumed as a result of their use or application. No rights under any patent accompany the sale of any such product(s) or information.

History

Version	Reason of Changes	Name	Date
1.0	Generation of development specification	Springfeldt	14.04.2004
1.1	Change insertion loss change of absolute attenuation	Strehl	21.01.2005
1.2	Add typical values and filter characteristic generation of filter specification	Strehl	23.06.2005
1.3	Add IIP3 and change stability characteristics	Strehl	19.07.2006

Tele Filter GmbH
Potsdamer Straße 18
D 14 513 TELTOW / Germany
Tel: (+49) 3328 4784-0 / Fax: (+49) 3328 4784-30
E-Mail: tft@telefilter.com

VI TELEFILTER reserves the right to make changes to the product(s) and/or information contained herein without notice. No liability is assumed as a result of their use or application. No rights under any patent accompany the sale of any such product(s) or information.