PCM-5895 Rev. A

Compact Board with AMD Geode™ LX Series Processor

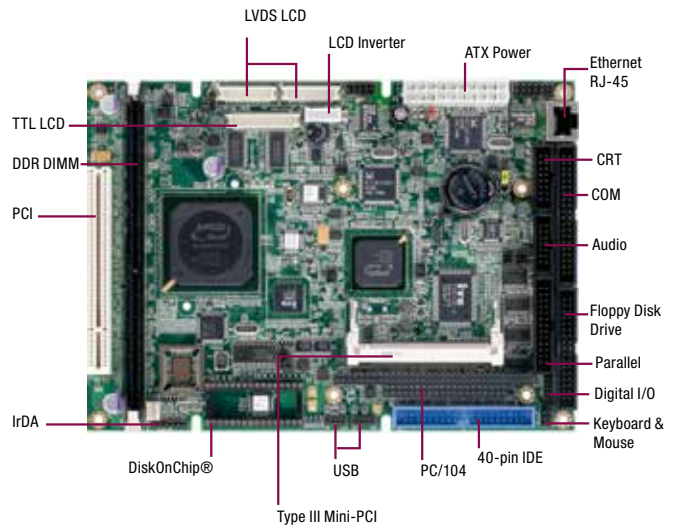

Features

- AMD Geode™ LX800 Processor
- AMD Geode™ LX + CS5536
- DDR 333/400 MHz DIMM x 1, Up To 1 GB
- 10/100Base-TX Ethernet x 2, RJ-45 x 1, Pin Header x 1
- Up To 24-bit LVDS/TTL LCD, CRT
- AC97 2CH Audio
- Type 2 CompactFlash™ x 1, EIDE x 1, Floppy Disk Drive x 1
- USB x 4, COM x 4, 8-bit Digital I/O
- PCI x 1, Mini-PCI, PC/104 x 1
- +5V Only Operation/ ATX

Specifications

System	
Form Factor	5.25"
Processor	Onboard AMD Geode™ LX800 (500 MHz) Processor
System Memory	184-pin 333/400 MHz DDR DIMM x 1, up to 1 GB
Chipset	AMD Geode™ LX + CS5536
I/O Chipset	ITE IT8712 + IT8888G
Ethernet	Realtek RTL8139DL, 10/100Base-TX, RJ-45 x 1 & pin header x 1
BIOS	Award 1 MB Flash ROM
Wake On LAN	Yes
Watchdog Timer	Generates a time-out system reset
H/W Status Monitoring	Supports power supply voltages, temperature monitoring
Expansion Interface	Mini-PCI x 1, PCI x 1, PC/104 x 1
Battery	Lithium battery
Power Requirement	+5V/ ATX
Power Consumption (Typical)	AMD Geode™ LX800 (500 MHz) DDR400 256 MB 2.33A@+5V
Board Size	8" (L) x 5.75" (W) (203mm x 146mm)
Gross Weight	1.2 lb (0.5 Kg)
Operating Temperature	32°F ~ 140°F (0°C ~ 60°C)
Storage Temperature	-40°F ~ 176°F (-40°C ~ 80°C)
Operating Humidity	0% ~ 90% relative humidity, non-condensing
MTBF (Hours)	80,000
Display	Supports CRT/ LCD simultaneous display
Chipset	AMD Geode™ LX integrated
Memory	Shared system memory up to 254 MB
Resolutions	Up to 1920 x 1440 @ 24bpp for CRT Up to 1600 x 1200 @ 24bpp for LCD
LCD Interface	Up to 24-bit LVDS, TTL, CRT
I/O	
Storage	EIDE x 1 (UDMA 100 for one device), Type 2 CompactFlash™ x 1, Floppy Disk Drive x 1
Serial Port	RS-232 x 3, RS-232/422/485 x 1
Parallel Port	SPP/ EPP/ ECP mode
USB	USB2.0 x 4
PS/2 Port	Keyboard x 1, Mouse x 1
Digital I/O	Supports 8-bit (Programmable)
IrDA	One IrDA Tx/Rx header
Audio	Mic-in, Line-in, Line-out, CD-in

Packing List

- **9657666000**
  Jumper Cap
- **Product CD**
- **PCM-5895 Rev.A**

Optional Accessories

- **TF-PER-A030**
  Cable Kit for PCM-5895
- **TF-PCM-3660-B10**
  PC/104 Ethernet Module
- **TF-PER-C10L-A10**
  Mini-PCI 10/100Base-TX Ethernet Module with Realtek 8100C
- **TF-PER-C10L-A10-01**
  Mini-PCI 10/100/1000Base-TX Ethernet Module with Realtek 8110S
- **TF-PER-C10L-A10-03**
  Mini-PCI 10/100/1000Base-TX Ethernet Module with Intel® 82541GI

PCM-5895 Rev. A

Block Diagram

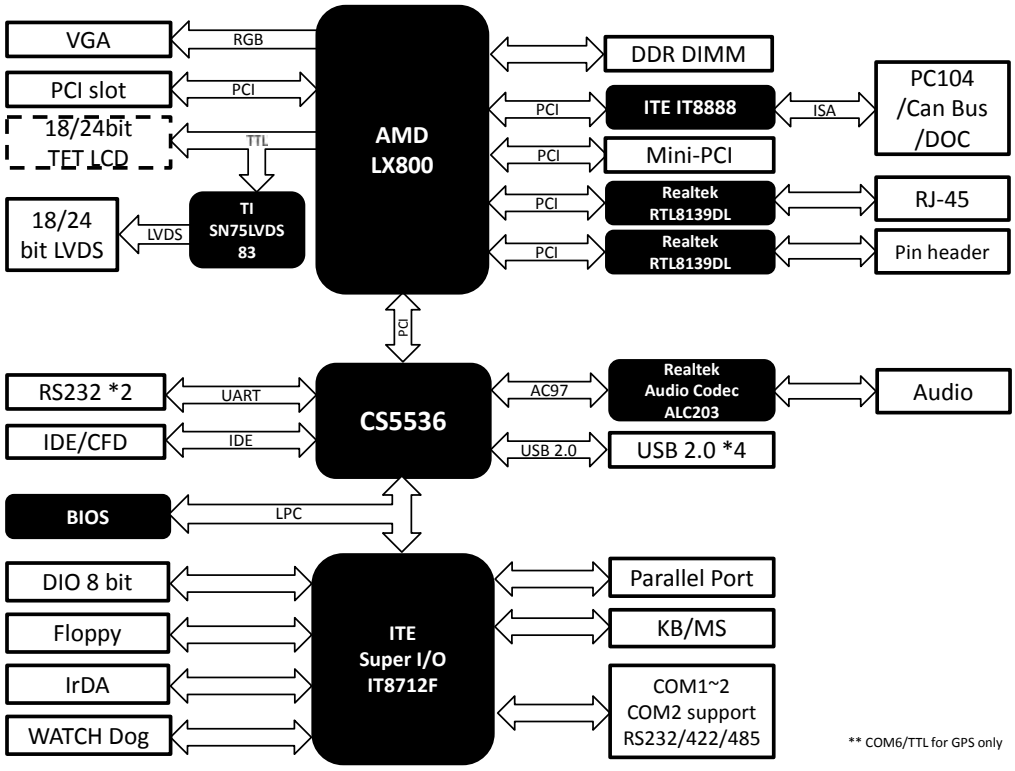

Dimension

Unit: mm

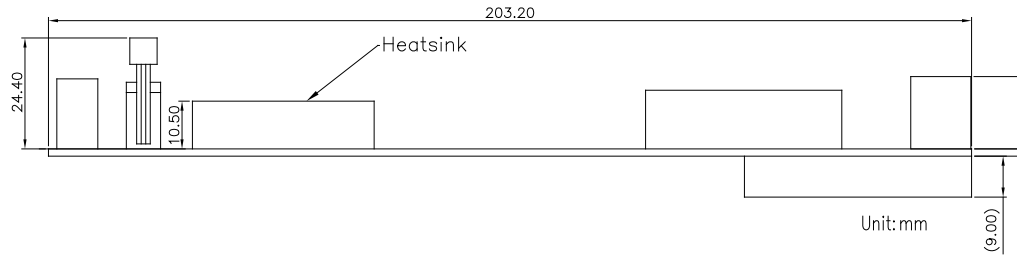

Ordering Information

Part Number	CPU	Memory	Fan/Fanless	Display	LVDS	Storage	LAN	USB	RS-232	RS-232/422/485	Expansion Slot	Power	Temp.	Others
TF-PCM-5895-A10	AMD Geode™ LX800	DDR (Max. 1 GB)	Fanless	CRT + LVDS CRT + TTL	18b, 1CH	IDE x 1 CompactFlash™ x 1	FE x 1	4	3	1	Mini-PCI x 1 PCI x 1 PC/104 x 1	ATX	0°C ~ 60°C	DIO 8-bit Audio LPT PS/2
TF-PCM-5895-A10-01	AMD Geode™ LX800	DDR (Max. 1 GB)	Fanless	CRT + LVDS CRT + TTL	24b, 1CH	IDE x 1 CompactFlash™ x 1	FE x 1	4	3	1	Mini-PCI x 1 PCI x 1 PC/104 x 1	ATX	0°C ~ 60°C	DIO 8-bit Audio LPT PS/2