DATA SHEET

TEA1507
GreenChip™II SMPS control IC

Preliminary specification
File under Integrated Circuits, IC11

2000 Dec 05

Philips
Semiconductors

PHILIPS

GreenChip™II SMPS control IC TEA1507

FEATURES

Distinctive features

- Universal mains supply operation (70 to 276 V AC)
- High level of integration, giving a very low external component count.

Green features

- Valley/zero voltage switching for minimum switching losses
- Efficient quasi-resonant operation at high power levels
- Frequency reduction at low power standby for improved system efficiency (<3 W)
- Burst mode operation for very low standby levels (<1 W)
- On-chip start-up current source.

Protection features

- Safe restart mode for system fault conditions
- Continuous mode protection by means of demagnetization detection (zero switch-on current)
- Accurate and adjustable overvoltage protection
- Short winding protection
- Undervoltage protection (foldback during overload)
- Overtemperature protection
- Low and adjustable overcurrent protection trip level
- Soft (re)start
- Mains voltage-dependent operation-enabling level.

APPLICATIONS

Besides typical application areas, i.e. TV and Monitor supplies, the device can be used in all applications that demand an efficient and cost-effective solution up to 250 W.

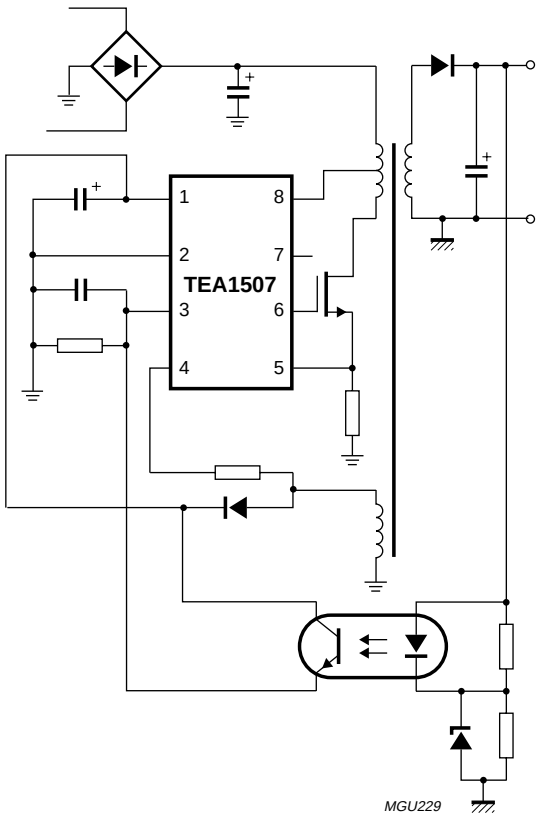

Fig.1 Typical application.

GENERAL DESCRIPTION

The GreenChip™II is the second generation of green Switched Mode Power Supply (SMPS) controller ICs operating directly from the rectified universal mains. A high level of integration leads to a cost effective power supply with a very low number of external components.

The special built-in green functions allow the efficiency to be optimum at all power levels. This holds for quasi-resonant operation at high power levels, as well as fixed frequency operation with valley switching at medium power levels. At low power (standby) levels, the system operates at reduced frequency and with valley detection. If burst mode operation is applied, the standby power level can even be reduced to below 1 W.

The proprietary high voltage BCD800 process makes direct start-up possible from the rectified mains voltage in an effective and green way. A second low voltage BICMOS IC is used for accurate, high speed protection functions and control.

Highly efficient, reliable supplies can easily be designed using the GreenChip™II controller.

ORDERING INFORMATION

TYPE NUMBER	PACKAGE		
	NAME	DESCRIPTION	VERSION
TEA1507P	DIP8	plastic dual in-line package; 8 leads (300 mil)	SOT97-1

BLOCK DIAGRAM

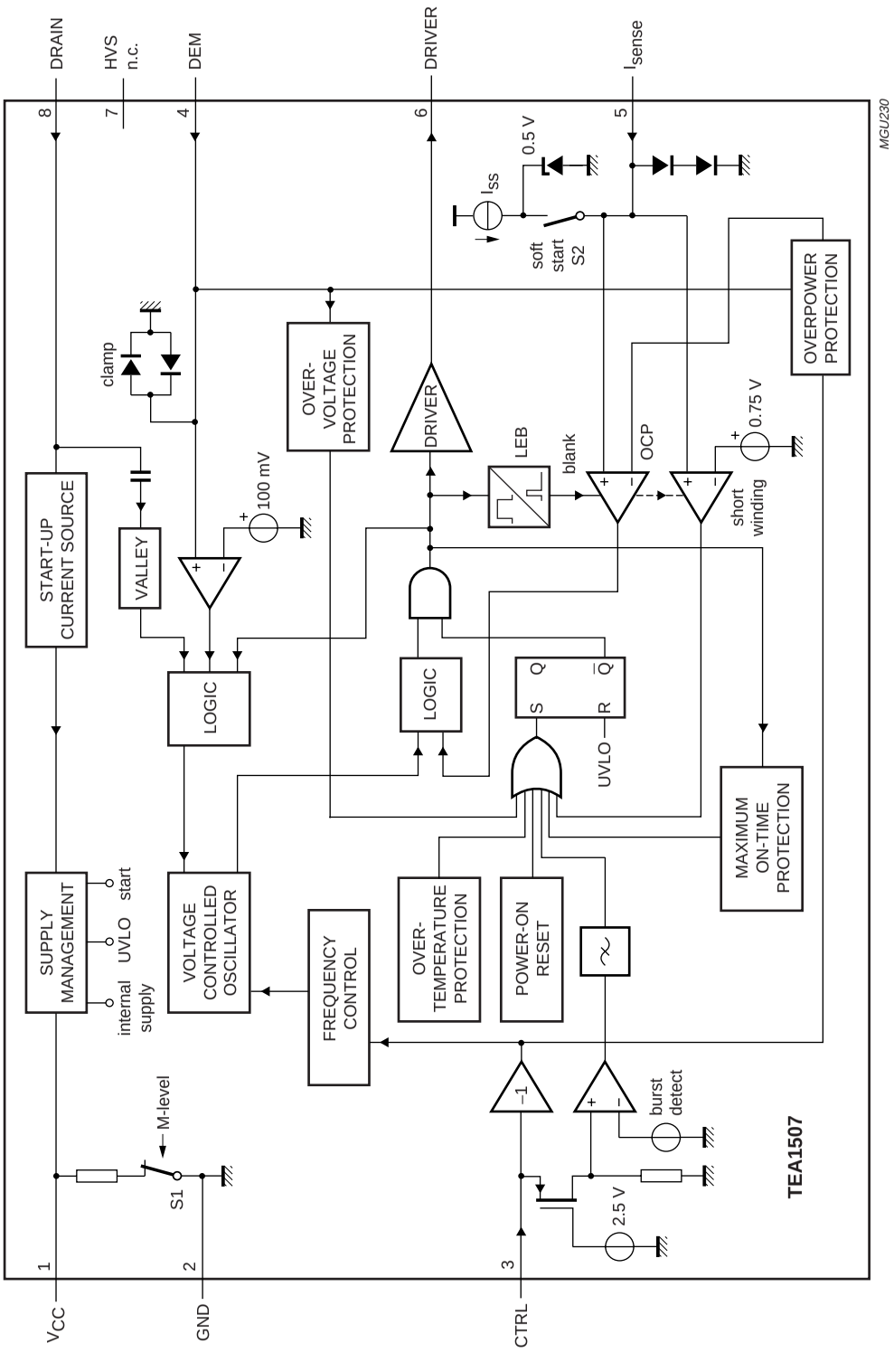

Fig.2 Block diagram.

PINNING

SYMBOL	PIN	DESCRIPTION
V_{CC}	1	supply voltage
GND	2	ground
CTRL	3	control input
DEM	4	input from auxiliary winding for demagnetization timing, OVP and OPP
I_{sense}	5	programmable current sense input
DRIVER	6	gate driver output
HVS	7	high voltage safety spacer, not connected
DRAIN	8	drain of external MOS switch, input for start-up current and valley sensing

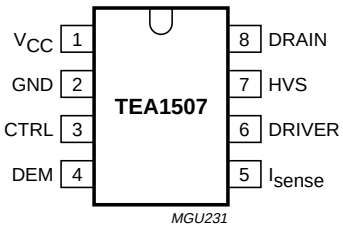

Fig.3 Pin configuration.

FUNCTIONAL DESCRIPTION

The TEA1507 is the controller of a compact flyback converter, with the IC situated at the primary side. An auxiliary winding of the transformer provides demagnetization detection and powers the IC after start-up.

The TEA1507 operates in multi modes.

The next converter stroke is started only after demagnetization of the transformer current (zero current switching), while the drain voltage has reached the lowest voltage to prevent switching losses (green function). The primary resonant circuit of primary inductance and drain capacitor ensures this quasi-resonant operation. The design can be optimized in such a way that zero voltage switching can be reached over almost the universal mains range.

To prevent very high frequency operation at lower loads, the quasi-resonant operation changes smoothly in fixed frequency PWM control.

At very low power (standby) levels, the frequency is controlled down, via the VCO, to a minimum frequency of about 6 kHz. Typically, 3 Watts can be achieved for a 75 W converter with an output power of 100 mW.

Start-up, mains enabling operation level and undervoltage lock out (see Figs. 10 and 11)

Initially, the IC is self supplying from the rectified mains voltage via pin DRAIN. Supply capacitor C_{VCC} is charged by the internal start-up current source to a level of about 4 V or higher, depending on the drain voltage. Once the drain voltage exceeds the M-level (mains-dependent operation-enabling level), the start-up current source will continue charging capacitor C_{VCC} (switch S1 will be opened), see Fig.2. The IC will activate the power converter as soon as the voltage on pin V_{CC} passes the $V_{CC(start)}$ level. The IC supply is taken over by the auxiliary winding as soon as the output voltage reaches its intended level and the IC supply from the mains voltage is subsequently stopped for high efficiency operation (green function).

The moment the voltage on pin V_{CC} drops below the V_{UVLO} (undervoltage lock out) level, the IC stops switching and enters a safe restart from the rectified mains voltage. Inhibiting the auxiliary supply by external means causes the converter to operate in a stable, well-defined burst mode.

Supply management

All (internal) reference voltages are derived from a temperature compensated, on-chip band gap circuit.

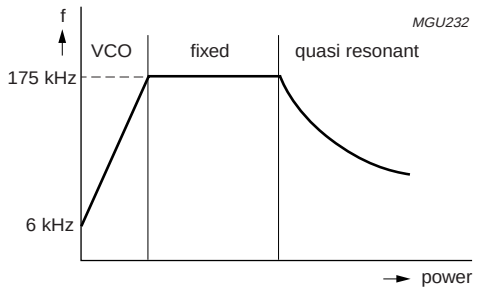

Fig.4 Multi mode operation.

Current mode control

Current mode control is used for its good line regulation behaviour.

The 'on-time' is controlled by the internally inverted control pin voltage, which is compared with the primary current information. The primary current is sensed across an external resistor. The driver output is latched in the logic, preventing multiple switch-on.

The internal control voltage is inversely proportional to the external control pin voltage, with an offset of 1.5 V. This means that a voltage range from 1 to 1.5 V on pin CTRL will result in an internal control voltage range from 0.5 to 0 V (the maximum external control voltage results in a minimum duty cycle).

Oscillator

The maximum fixed frequency of the oscillator is set by an internal current source and capacitor. The maximum frequency is reduced once the control voltage enters the VCO control window. Then, the maximum frequency changes linearly with the control voltage until the minimum frequency is reached (see Figs 5 and 6).

Valley switching (see Fig.7)

A new cycle starts when the power switch is switched on. After the 'on-time' (which is determined by the 'sense' voltage and the internal control voltage), the switch is opened and the secondary stroke starts. After the secondary stroke, the drain voltage shows an oscillation with a frequency of approximately $\frac{1}{(2 \times \pi \times \sqrt{(L_p \times C_d)})}$

where L_p is the primary self inductance of the transformer and C_d is the capacitance on the drain node.

As soon as the oscillator voltage is high again and the secondary stroke has ended, the circuit waits for the lowest drain voltage before starting a new primary stroke. This method is called valley detection. Figure 7 shows the drain voltage together with the valley signal, the signal indicating the secondary stroke and the oscillator signal.

In an optimum design, the reflected secondary voltage on the primary side will force the drain voltage to zero. Thus, zero voltage switching is very possible, preventing large capacitive switching losses $\left(P = \frac{1}{2} \times C \times V^2 \times f\right)$, and allowing high frequency operation, which results in small and cost effective inductors.

Demagnetization

The system will be in discontinuous conduction mode all the time. The oscillator will not start a new primary stroke until the secondary stroke has ended.

Demagnetization features a cycle-by-cycle output short-circuit protection by immediately lowering the frequency (longer off-time), thereby reducing the power level.

Demagnetization recognition is suppressed during the first t_{suppr} time. This suppression may be necessary in applications where the transformer has a large leakage inductance and at low output voltages/start-up.

Minimum and maximum 'on-time'

The minimum 'on-time' of the SMPS is determined by the Leading Edge Blanking (LEB) time. The IC limits the 'on-time' to 50 μs. When the system desires an 'on-time' longer than 50 μs, a fault condition is assumed (e.g. removed C_i), the IC will stop switching and enter the safe restart mode.

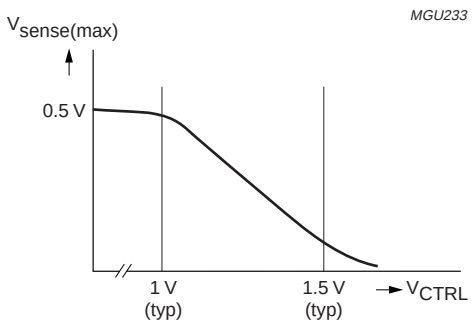

Fig.5 The $V_{sense(max)}$ voltage as function of V_{CTRL}.

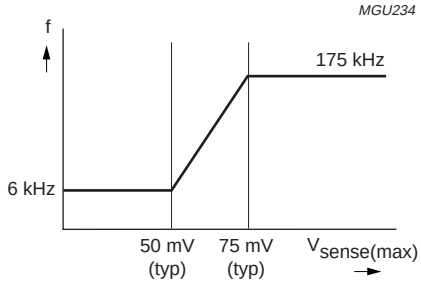

Fig.6 The VCO frequency as function of $V_{sense(max)}$

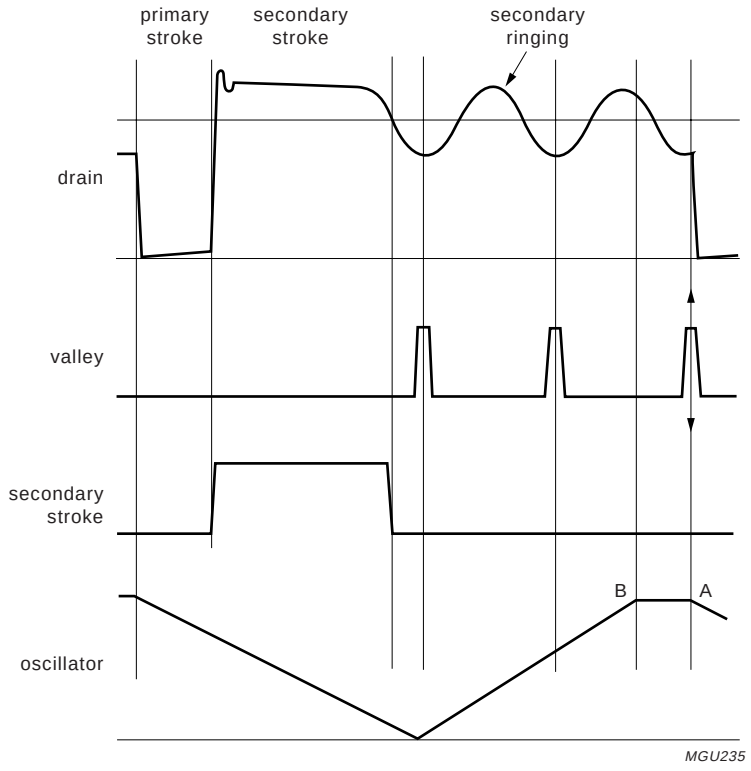

A: Start of new cycle at lowest drain voltage.

B: Start of new cycle in a classical PWM system at high drain voltage.

Fig.7 Signals for valley switching.

OverVoltage Protection (OVP)

An OVP mode is implemented in the GreenChip™ series. For the TEA1507, this works by sensing the auxiliary voltage via the current flowing into pin DEM during the secondary stroke. The auxiliary winding voltage is a well-defined replica of the output voltage. Any voltage spikes are averaged by an internal filter.

If the output voltage exceeds the OVP trip level, the OVP circuit switches the power MOSFET off. Next, the controller waits until the UVLO level is reached on pin V_{CC}. This is followed by a safe restart cycle, after which switching starts again. This process is repeated as long as the OVP condition exists.

The output voltage at which the OVP function trips, $V_{o(OVP)}$ can be set by the demagnetization resistor, R_{DEM}:

$$V_{o(OVP)} = \frac{N_s}{N_{aux}} \times (I_{(OVP)(DEM)} \times R_{DEM} + V_{clamp(DEM)(pos)})$$

Where N_s is the number of secondary turns and N_{aux} is the number of auxiliary turns of the transformer.

Current I_{ref} is internally trimmed.

The value of the demagnetization resistor (R_{DEM}) can be adjusted to the turns ratio of the transformer, thus making an accurate OVP possible.

OverCurrent Protection (OCP)

The cycle-by-cycle peak drain current limit circuit uses the external source resistor to measure the current accurately. This allows optimum size determination of the transformer core (cost issue). The circuit is activated after the leading edge blanking time, t_{leb}. The OCP protection circuit limits the ‘sense’ voltage to an internal level.

OverPower Protection (OPP)

During the primary stroke, the rectified mains input voltage is measured by sensing the current drawn from pin DEM. This current is dependent on the mains voltage, according to the following formula: $I_{(DEM)} \approx \frac{V_{aux}}{R_{DEM}} \approx \frac{N \times V_{mains}}{R_{DEM}}$

Where: $N = \frac{N_{aux}}{N_p}$

The current information is used to adjust the peak drain current, which is measured via pin I_{sense}. The internal compensation is such that an almost mains independent maximum output power can be realized.

The OPP curve is given in Fig.8.

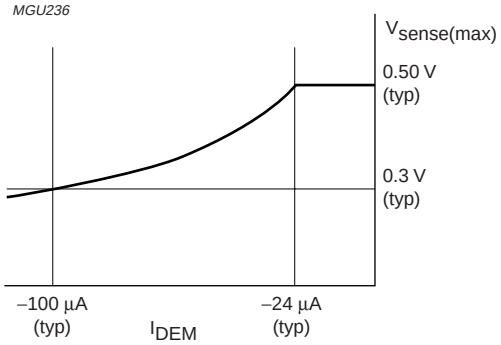

Fig.8 OPP correction curve.

Short winding protection

After the leading edge blanking time, the short winding protection circuit is also activated. If the ‘sense’ voltage exceeds the short winding protection voltage V_{swp}, the converter will stop switching. Once V_{CC} drops below the UVLO level, capacitor C_{VCC} will be recharged and the supply will restart again. This cycle will be repeated until the short circuit is removed (safe restart mode).

The short winding protection will also protect in case of a secondary diode short circuit.

Overtemperature protection

An accurate temperature protection is provided in the circuit. When the junction temperature exceeds the thermal shutdown temperature, the IC will stop switching. When V_{CC} drops to UVLO, capacitor C_{VCC} will be recharged to the V_{start} level. If the temperature is still too high, V_{CC} will drop again to the UVLO level, etc. (safe restart mode).

Operation recommences when the junction temperature drops 8 degrees typically.

Burst mode standby

Pin CTRL (pin 3) is also used to implement the burst mode standby. In burst mode standby, the power supply enters a special low dissipation state, where it typically consumes less than 1 W of input power (P_o < 100 mW), but is still able to supply a microprocessor, for example. Figure 12 shows a flyback converter using the burst mode standby function. The system enters burst mode standby when the microprocessor closes switches S2 and S3 on the secondary side. Switch S2 connects the high voltage output secondary winding to the low voltage microprocessor capacitor ($C_{\mu C}$), bypassing C_o.

When the voltage on $C_{\mu C}$ exceeds the Zener voltage, the opto-coupler is activated, sending a large current signal to CTRL. In response to this signal, the IC stops switching and enters a 'hiccup' mode. This burst activation signal should be present for longer than the 'burst blank' period (typically 30 μs): the blanking time prevents false burst triggering due to spikes. Figure 11 shows the burst-mode standby signals. The hiccup mode during burst mode standby operation does not differ from the hiccup mode in safe-restart mode during a system fault condition (e.g. OVP or output short circuit). The power is reduced during soft-restart mode.

Burst mode standby operation continues until the microcontroller opens switches S2 and S3. The system then enters the start-up sequence and begins normal switching behaviour.

$$I_{burstmode} = \frac{V_{th}}{R_{CTRL}} + I_{th(on)}$$

(For burst mode specification, see Figs 11 and 12.)

Soft start-up (pin I_{sense})

To prevent transformer rattle during hiccup, the transformer peak current is slowly increased by the soft start function. This can be achieved by inserting a resistor and a capacitor between pin I_{sense} (pin 5) and the sense resistor. An internal current source charges the capacitor to $V = I_{ss} \times R_{ss}$, with a maximum of about 0.5 V.

The start level and the time constant of the increasing primary current level can be adjusted externally by changing the values of R_{ss} and C_{ss}.

$$I_{primary(max)} = \frac{V_{ocp} - (I_{ss} \times R_{ss})}{R_{sense}}$$

$$\tau = R_{ss} \times C_{ss}$$

The charging current I_{ss} will flow as long as the voltage on pin I_{sense} is below approximately 0.5 V. If the voltage on pin I_{sense} exceeds the 0.5 V, the soft start current source will start limiting the current I_{ss}. At the $V_{CC(start)}$ level, the I_{ss} current source is completely switched off (see Fig.9).

Since the soft start current I_{ss} is subtracted from pin V_{CC} charging current, the R_{ss} value will affect the V_{CC} charging current level by a maximum of 60 μA (typical value).

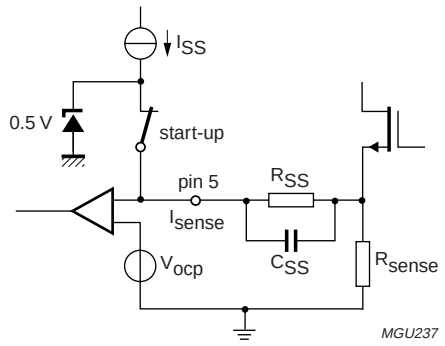

Fig.9 Soft start-up.

Driver

The driver circuit to the gate of the power MOSFET has a current sourcing capability of typically 125 mA and a current sink capability of typical 540 mA. This permits fast turn-on and turn-off of the power MOSFET for efficient operation.

A low driver source current has been chosen to limit the $\Delta V/\Delta t$ at switch-on. This reduces Electro Magnetic Interference (EMI) and also limits the current spikes across R_{sense}.

LIMITING VALUES

In accordance with the Absolute Maximum Rating System (IEC 60134). All voltages are measured with respect to ground (pin 2); positive currents flow into the chip; pin 1 may not be current driven. The voltage ratings are valid provided other ratings are not violated; current ratings are valid provided the maximum power rating is not violated.

SYMBOL	PARAMETER	CONDITIONS	MIN.	MAX.	UNIT
Voltages					
V_1	pin 1 (V_{CC})	continuous	–0.4	+20	V
V_3	pin 3 (CTRL)		–0.4	+5	V
V_4	pin 4 (DEM)	current limited	–0.4	–	V
V_5	pin 5 (I_{sense})	current limited	–0.4	–	V
V_8	pin 8 (DRAIN)		–0.4	+650	V
Currents					
I_3	pin 3 (CTRL)	d < 10%	–	+50	mA
I_4	pin 4 (DEM)		–250	+250	μA
I_5	pin 5 (I_{sense})		–1	+10	mA
I_6	pin 6 (DRIVER)	d < 10%	–0.8	+2	A
I_8	pin 8 (DRAIN)		–	+5	mA
General					
P_{tot}	total power dissipation	T_{amb} < 55 °C	–	1.0	W
T_{stg}	storage temperature		–55	+150	°C
T_{vj}	virtual junction temperature		–20	+145	°C
ESD					
V_{ESD}	electrostatic discharge voltage	class 1			
	human body model	pins 1 to 6; note 1	–	1750	V
		pin 8 (DRAIN); note 1	–	1000	V
	machine model	note 2	–	200	V

Notes

1. Equivalent to discharging a 100 pF capacitor through a 1.5 kΩ series resistor.
2. Equivalent to discharging a 200 pF capacitor through a 0.75 μH coil and a 10 Ω resistor.

THERMAL CHARACTERISTICS

SYMBOL	PARAMETER	CONDITIONS	VALUE	UNIT
$R_{th(j-a)}$	thermal resistance from junction to ambient	in free air; note 1	100	K/W

Note

1. With pin GND connected to sufficient copper area on the printed-circuit board.

QUALITY SPECIFICATION

In accordance with ‘SNW-FQ-611-E’.

CHARACTERISTICS

T_{amb} = 25 °C; V_{CC} = 15 V; all voltages are measured with respect to ground (pin 2); currents are positive when flowing into the IC; unless otherwise specified.

SYMBOL	PARAMETER	CONDITIONS	MIN.	TYP.	MAX.	UNIT
Start-up current source (pin 8)						
$I_{i(DRAIN)}$	supply current drawn from drain pin	V_{CC} = 0 V; V_{DRAIN} > 100 V	1.0	1.2	1.4	mA
		with auxiliary supply; V_{DRAIN} > 100 V	–	100	300	µA
BV_{DSS}	breakdown voltage		650	–	–	V
M-level	mains-dependent operation-enabling level		60	–	100	V
V_{CC} management (pin 1)						
$V_{CC(start)}$	start-up voltage on V_{CC}		10.3	11	11.7	V
$V_{CC(UVLO)}$	under voltage lock-out on V_{CC}		8.1	8.7	9.3	V
$V_{CC(hys)}$	hysteresis voltage on V_{CC}	$V_{CC(start)} - V_{CC(UVLO)}$	2.0	2.3	2.6	V
$I_{i(VCC)H}$	pin V_{CC} charging current	V_{DRAIN} > 100 V; V_{CC} < 3V	–1.2	–1	–0.8	mA
$I_{i(VCC)L}$	pin V_{CC} charging current	V_{DRAIN} > 100 V; 3 V < V_{CC} < $V_{CC(UVLO)}$	–1.2	–0.75	–0.45	mA
$I_{VCC(restart)}$	pin V_{CC} restart current	V_{DRAIN} > 100 V; $V_{CC(UVLO)}$ < V_{CC} < $V_{CC(start)}$	–650	–550	–450	µA
$I_{CC(operate)}$	supply current under normal operation	no load on pin DRIVER	1.1	1.3	1.5	mA
Demagnetization management (pin 4)						
V_{DEM}	demagnetization comparator threshold voltage on pin DEM		50	100	150	mV
I_{DEM}	pin DEM current	V_{DEM} = 50 mV	–50[1]	–	0	nA
$V_{clamp(DEM)(neg)}$	negative clamp voltage on pin DEM	at I_{DEM} = –150 µA	–0.5	–0.25	–0.05	V
$V_{clamp(DEM)(pos)}$	positive clamp voltage on pin DEM	at I_{DEM} = 250 µA	0.5	0.7	0.9	V
t_{suppr}	suppression of transformer ringing at start of secondary stroke		1.1	1.5	1.9	µs
Pulse width modulator						
$t_{on(min)}$	minimum on-time		–	t_{leb}	–	ns
$t_{on(max)}$	maximum on-time	latched	40	50	60	µs
Oscillator						
f_{oscL}	oscillator low frequency (fixed frequency)	V_{CTRL} > 1.5 V	5	6.5	8	kHz
f_{oscH}	oscillator high frequency (fixed frequency)	V_{CTRL} < 1 V	145	175	205	kHz
$V_{vco(start)}$	peak voltage at pin I_{sense}, where frequency reduction starts	see Fig.6	–	75	–	mV
$V_{vco(max)}$	peak voltage at pin I_{sense}, where the frequency is equal to f_{oscL}		–	50	–	mV
Duty cycle control (pin 3)						
$V_{CTRL(min)}$	min. voltage on CTRL (max. duty cycle)		–	1.0	–	V
$V_{CTRL(max)}$	max. voltage on CTRL (min. duty cycle)		–	1.5	–	V

SYMBOL	PARAMETER	CONDITIONS	MIN.	TYP.	MAX.	UNIT
Burst mode standby (pin 3)						
$V_{th(burst)(on)}$	burst mode standby active threshold voltage	at I_{burst} = 6 mA	3.3	3.8	4.3	V
$I_{th(burst)(on)}$	burst mode standby active current		16	–	–	mA
$I_{th(burst)(off)}$	burst mode standby inactive current		–	–	6	mA
$t_{(burst-blank)}$	burst mode standby blanking time		25	30	35	µs
Valley switch (pin 8)						
$\Delta V/\Delta t_{valley}$	$\Delta V/\Delta t$ for valley recognition		–85	–	+85	V/µs
$t_{valley-swon}$	delay from valley recognition to switch-on		–	150(1)	–	ns
Current and short winding protection (pin 5)						
$V_{sense(max)}$	maximum source voltage OCP	$\Delta V/\Delta t$ = 0.1 V/µs	0.48	0.52	0.56	V
$t_{propagation}$	delay from detecting $V_{sense(max)}$ to switch-off	$\Delta V/\Delta t$ = 0.5 V/µs	–	140	185	ns
V_{swp}	short winding protection voltage		0.83	0.88	0.96	V
t_{leb}	blanking time for current and short winding protection		300	370	440	ns
I_{ss}	soft start current	V_{sense} < 0.5 V	45	60	75	µA
Overvoltage protection (pin 4)						
$I_{(OVP)(DEM)}$	OVP protection level at pin 4, set by the demagnetization resistor R_{DEM}; see Section “OverVoltage Protection (OVP)”		54	60	66	µA
Overpower protection (pin 4)						
$I_{(OPP)(DEM)}$	OPP current at pin 4, start of OPP correction. Set by the demagnetization resistor R_{DEM}; see Section “OverPower Protection (OPP)”		–	–24	–	µA
$I_{(OPP50\%)(DEM)}$	OPP current at pin 4 where maximum source voltage is limited to 0.3 V		–	–100	–	µA
Driver (pin 6)						
I_{source}	source current capability of driver	V_{CC} = 9.5 V; V_{DRIVER} = 2 V	–	–170	–88	mA
I_{sink}	sink current capability of driver	V_{CC}= 9.5 V; V_{DRIVER} = 2 V	–	300	–	mA
		V_{CC} = 9.5 V; V_{DRIVER} = 9.5 V	400	700	–	mA
$V_{o(driver)(max)}$	maximum output voltage of the driver	V_{CC} > 12 V	–	11.5	12	V
Temperature protection						
$T_{prot(max)}$	maximum temperature threshold		130	140	150	°C
$T_{prot(hyst)}$	hysteresis temperature		–	8(1)	–	°C

Note

1. Guaranteed by design.

APPLICATION INFORMATION

A converter with the TEA1507 consists of an input filter, a transformer with a third winding (auxiliary), and an output stage with a feedback circuit.

Capacitor C_{VCC} (at pin 1) buffers the supply voltage of the IC, which is powered via the high voltage rectified mains during start-up and via the auxiliary winding during operation.

A sense resistor converts the primary current into a voltage at pin I_{sense} (pin 5). The value of this sense resistor defines the maximum primary peak current.

An application note is available: AN00047.

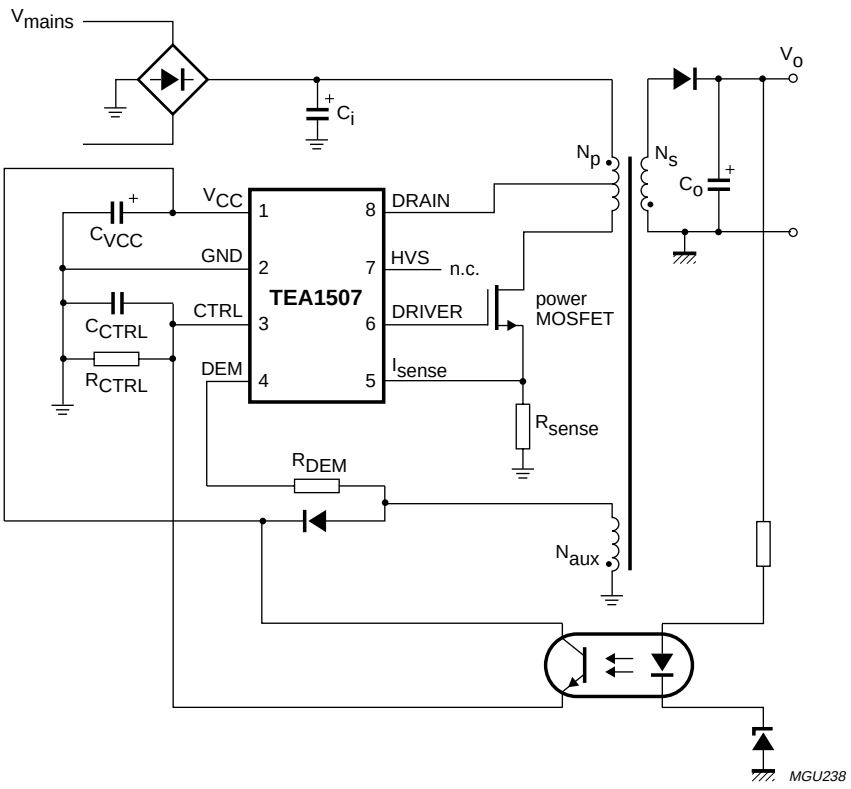

Fig.10 Flyback configuration with secondary sensing.

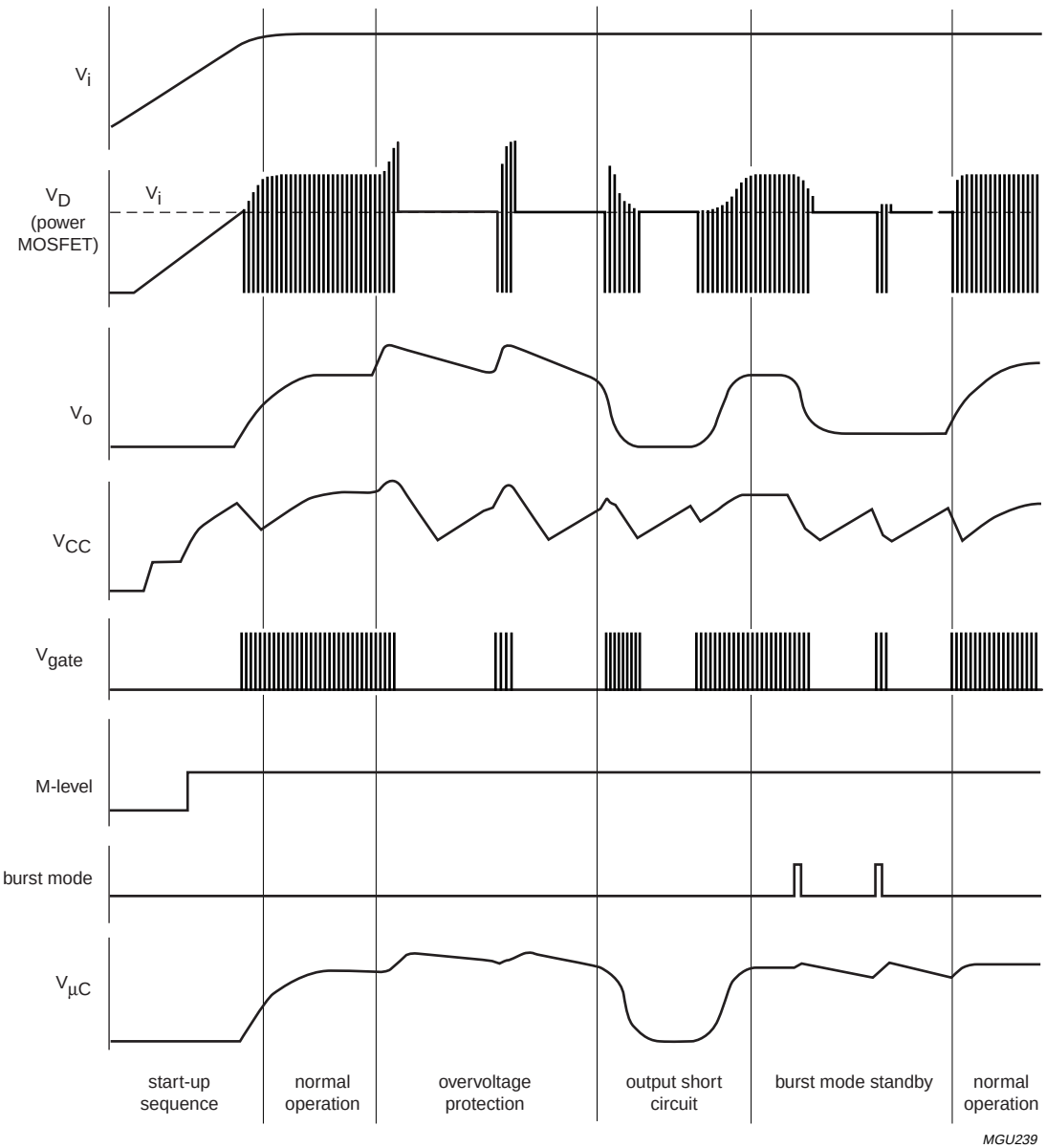

Fig.11 Typical waveforms.

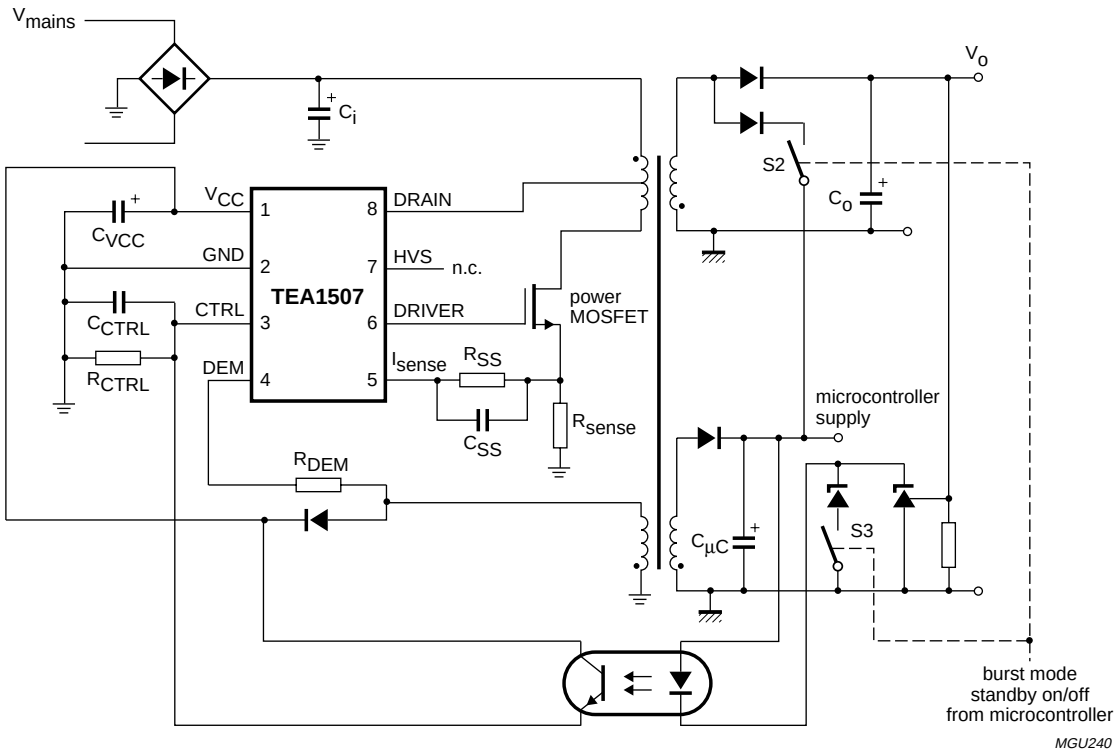

Fig.12 Flyback configuration with secondary sensing using the burst mode standby.

PACKAGE OUTLINE

DIP8: plastic dual in-line package; 8 leads (300 mil) **SOT97-1**

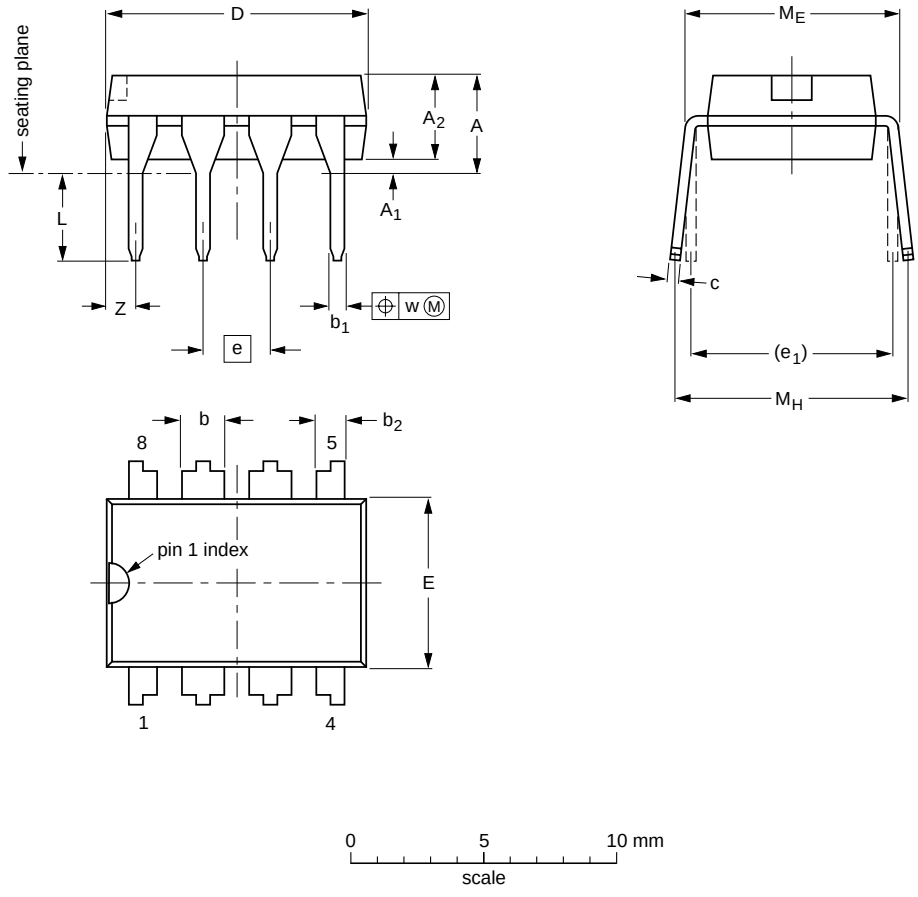

DIMENSIONS (inch dimensions are derived from the original mm dimensions)

UNIT	A max.	A_1 min.	A_2 max.	b	b_1	b_2	c	D (1)	E (1)	e	e_1	L	M_E	M_H	w	Z (1) max.
mm	4.2	0.51	3.2	1.73 1.14	0.53 0.38	1.07 0.89	0.36 0.23	9.8 9.2	6.48 6.20	2.54	7.62	3.60 3.05	8.25 7.80	10.0 8.3	0.254	1.15
inches	0.17	0.020	0.13	0.068 0.045	0.021 0.015	0.042 0.035	0.014 0.009	0.39 0.36	0.26 0.24	0.10	0.30	0.14 0.12	0.32 0.31	0.39 0.33	0.01	0.045

Note

1. Plastic or metal protrusions of 0.25 mm maximum per side are not included.

OUTLINE VERSION	REFERENCES				EUROPEAN PROJECTION	ISSUE DATE
	IEC	JEDEC	EIAJ			
SOT97-1	050G01	MO-001	SC-504-8			~~95-02-04~~ 99-12-27

SOLDERING

Introduction to soldering through-hole mount packages

This text gives a brief insight to wave, dip and manual soldering. A more in-depth account of soldering ICs can be found in our *"Data Handbook IC26; Integrated Circuit Packages"* (document order number 9398 652 90011).

Wave soldering is the preferred method for mounting of through-hole mount IC packages on a printed-circuit board.

Soldering by dipping or by solder wave

The maximum permissible temperature of the solder is 260 °C; solder at this temperature must not be in contact with the joints for more than 5 seconds.

The total contact time of successive solder waves must not exceed 5 seconds.

The device may be mounted up to the seating plane, but the temperature of the plastic body must not exceed the specified maximum storage temperature ($T_{stg(max)}$). If the printed-circuit board has been pre-heated, forced cooling may be necessary immediately after soldering to keep the temperature within the permissible limit.

Manual soldering

Apply the soldering iron (24 V or less) to the lead(s) of the package, either below the seating plane or not more than 2 mm above it. If the temperature of the soldering iron bit is less than 300 °C it may remain in contact for up to 10 seconds. If the bit temperature is between 300 and 400 °C, contact may be up to 5 seconds.

Suitability of through-hole mount IC packages for dipping and wave soldering methods

PACKAGE	SOLDERING METHOD	
	DIPPING	WAVE
DBS, DIP, HDIP, SDIP, SIL	suitable	suitable[1]

Note

1. For SDIP packages, the longitudinal axis must be parallel to the transport direction of the printed-circuit board.

DATA SHEET STATUS

DATA SHEET STATUS	PRODUCT STATUS	DEFINITIONS (1)
Objective specification	Development	This data sheet contains the design target or goal specifications for product development. Specification may change in any manner without notice.
Preliminary specification	Qualification	This data sheet contains preliminary data, and supplementary data will be published at a later date. Philips Semiconductors reserves the right to make changes at any time without notice in order to improve design and supply the best possible product.
Product specification	Production	This data sheet contains final specifications. Philips Semiconductors reserves the right to make changes at any time without notice in order to improve design and supply the best possible product.

Note

1. Please consult the most recently issued data sheet before initiating or completing a design.

DEFINITIONS

Short-form specification — The data in a short-form specification is extracted from a full data sheet with the same type number and title. For detailed information see the relevant data sheet or data handbook.

Limiting values definition — Limiting values given are in accordance with the Absolute Maximum Rating System (IEC 60134). Stress above one or more of the limiting values may cause permanent damage to the device. These are stress ratings only and operation of the device at these or at any other conditions above those given in the Characteristics sections of the specification is not implied. Exposure to limiting values for extended periods may affect device reliability.

Application information — Applications that are described herein for any of these products are for illustrative purposes only. Philips Semiconductors make no representation or warranty that such applications will be suitable for the specified use without further testing or modification.

DISCLAIMERS

Life support applications — These products are not designed for use in life support appliances, devices, or systems where malfunction of these products can reasonably be expected to result in personal injury. Philips Semiconductors customers using or selling these products for use in such applications do so at their own risk and agree to fully indemnify Philips Semiconductors for any damages resulting from such application.

Right to make changes — Philips Semiconductors reserves the right to make changes, without notice, in the products, including circuits, standard cells, and/or software, described or contained herein in order to improve design and/or performance. Philips Semiconductors assumes no responsibility or liability for the use of any of these products, conveys no licence or title under any patent, copyright, or mask work right to these products, and makes no representations or warranties that these products are free from patent, copyright, or mask work right infringement, unless otherwise specified.

NOTES

Philips Semiconductors – a worldwide company

Argentina: see South America

Australia: 3 Figtree Drive, HOMEBUSH, NSW 2140,
Tel. +61 2 9704 8141, Fax. +61 2 9704 8139

Austria: Computerstr. 6, A-1101 WIEN, P.O. Box 213,
Tel. +43 1 60 101 1248, Fax. +43 1 60 101 1210

Belarus: Hotel Minsk Business Center, Bld. 3, r. 1211, Volodarski Str. 6,
220050 MINSK, Tel. +375 172 20 0733, Fax. +375 172 20 0773

Belgium: see The Netherlands

Brazil: see South America

Bulgaria: Philips Bulgaria Ltd., Energoproject, 15th floor,
51 James Bourchier Blvd., 1407 SOFIA,
Tel. +359 2 68 9211, Fax. +359 2 68 9102

Canada: PHILIPS SEMICONDUCTORS/COMPONENTS,
Tel. +1 800 234 7381, Fax. +1 800 943 0087

China/Hong Kong: 501 Hong Kong Industrial Technology Centre,
72 Tat Chee Avenue, Kowloon Tong, HONG KONG,
Tel. +852 2319 7888, Fax. +852 2319 7700

Colombia: see South America

Czech Republic: see Austria

Denmark: Sydhavnsgade 23, 1780 COPENHAGEN V,
Tel. +45 33 29 3333, Fax. +45 33 29 3905

Finland: Sinikalliontie 3, FIN-02630 ESPOO,
Tel. +358 9 615 800, Fax. +358 9 6158 0920

France: 51 Rue Carnot, BP317, 92156 SURESNES Cedex,
Tel. +33 1 4099 6161, Fax. +33 1 4099 6427

Germany: Hammerbrookstraße 69, D-20097 HAMBURG,
Tel. +49 40 2353 60, Fax. +49 40 2353 6300

Hungary: see Austria

India: Philips INDIA Ltd, Band Box Building, 2nd floor,
254-D, Dr. Annie Besant Road, Worli, MUMBAI 400 025,
Tel. +91 22 493 8541, Fax. +91 22 493 0966

Indonesia: PT Philips Development Corporation, Semiconductors Division,
Gedung Philips, Jl. Buncit Raya Kav.99-100, JAKARTA 12510,
Tel. +62 21 794 0040 ext. 2501, Fax. +62 21 794 0080

Ireland: Newstead, Clonskeagh, DUBLIN 14,
Tel. +353 1 7640 000, Fax. +353 1 7640 200

Israel: RAPAC Electronics, 7 Kehilat Saloniki St, PO Box 18053,
TEL AVIV 61180, Tel. +972 3 645 0444, Fax. +972 3 649 1007

Italy: PHILIPS SEMICONDUCTORS, Via Casati, 23 - 20052 MONZA (MI),
Tel. +39 039 203 6838, Fax +39 039 203 6800

Japan: Philips Bldg 13-37, Kohnan 2-chome, Minato-ku,
TOKYO 108-8507, Tel. +81 3 3740 5130, Fax. +81 3 3740 5057

Korea: Philips House, 260-199 Itaewon-dong, Yongsan-ku, SEOUL,
Tel. +82 2 709 1412, Fax. +82 2 709 1415

Malaysia: No. 76 Jalan Universiti, 46200 PETALING JAYA, SELANGOR,
Tel. +60 3 750 5214, Fax. +60 3 757 4880

Mexico: 5900 Gateway East, Suite 200, EL PASO, TEXAS 79905,
Tel. +9-5 800 234 7381, Fax +9-5 800 943 0087

Middle East: see Italy

Netherlands: Postbus 90050, 5600 PB EINDHOVEN, Bldg. VB,
Tel. +31 40 27 82785, Fax. +31 40 27 88399

New Zealand: 2 Wagener Place, C.P.O. Box 1041, AUCKLAND,
Tel. +64 9 849 4160, Fax. +64 9 849 7811

Norway: Box 1, Manglerud 0612, OSLO,
Tel. +47 22 74 8000, Fax. +47 22 74 8341

Pakistan: see Singapore

Philippines: Philips Semiconductors Philippines Inc.,
106 Valero St. Salcedo Village, P.O. Box 2108 MCC, MAKATI,
Metro MANILA, Tel. +63 2 816 6380, Fax. +63 2 817 3474

Poland: Al.Jerozolimskie 195 B, 02-222 WARSAW,
Tel. +48 22 5710 000, Fax. +48 22 5710 001

Portugal: see Spain

Romania: see Italy

Russia: Philips Russia, Ul. Usatcheva 35A, 119048 MOSCOW,
Tel. +7 095 755 6918, Fax. +7 095 755 6919

Singapore: Lorong 1, Toa Payoh, SINGAPORE 319762,
Tel. +65 350 2538, Fax. +65 251 6500

Slovakia: see Austria

Slovenia: see Italy

South Africa: S.A. PHILIPS Pty Ltd., 195-215 Main Road Martindale,
2092 JOHANNESBURG, P.O. Box 58088 Newville 2114,
Tel. +27 11 471 5401, Fax. +27 11 471 5398

South America: Al. Vicente Pinzon, 173, 6th floor,
04547-130 SÃO PAULO, SP, Brazil,
Tel. +55 11 821 2333, Fax. +55 11 821 2382

Spain: Balmes 22, 08007 BARCELONA,
Tel. +34 93 301 6312, Fax. +34 93 301 4107

Sweden: Kottbygatan 7, Akalla, S-16485 STOCKHOLM,
Tel. +46 8 5985 2000, Fax. +46 8 5985 2745

Switzerland: Allmendstrasse 140, CH-8027 ZÜRICH,
Tel. +41 1 488 2741 Fax. +41 1 488 3263

Taiwan: Philips Semiconductors, 5F, No. 96, Chien Kuo N. Rd., Sec. 1,
TAIPEI, Taiwan Tel. +886 2 2134 2451, Fax. +886 2 2134 2874

Thailand: PHILIPS ELECTRONICS (THAILAND) Ltd.,
60/14 MOO 11, Bangna Trad Road KM. 3, Bagna, BANGKOK 10260,
Tel. +66 2 361 7910, Fax. +66 2 398 3447

Turkey: Yukari Dudullu, Org. San. Blg., 2.Cad. Nr. 28 81260 Umraniye,
ISTANBUL, Tel. +90 216 522 1500, Fax. +90 216 522 1813

Ukraine: PHILIPS UKRAINE, 4 Patrice Lumumba str., Building B, Floor 7,
252042 KIEV, Tel. +380 44 264 2776, Fax. +380 44 268 0461

United Kingdom: Philips Semiconductors Ltd., 276 Bath Road, Hayes,
MIDDLESEX UB3 5BX, Tel. +44 208 730 5000, Fax. +44 208 754 8421

United States: 811 East Arques Avenue, SUNNYVALE, CA 94088-3409,
Tel. +1 800 234 7381, Fax. +1 800 943 0087

Uruguay: see South America

Vietnam: see Singapore

Yugoslavia: PHILIPS, Trg N. Pasica 5/v, 11000 BEOGRAD,
Tel. +381 11 3341 299, Fax.+381 11 3342 553

For all other countries apply to: Philips Semiconductors,
Marketing Communications, Building BE-p, P.O. Box 218, 5600 MD EINDHOVEN,
The Netherlands, Fax. +31 40 27 24825

Internet: http://www.semiconductors.philips.com

© Philips Electronics N.V. 2000 SCA 70

All rights are reserved. Reproduction in whole or in part is prohibited without the prior written consent of the copyright owner.

The information presented in this document does not form part of any quotation or contract, is believed to be accurate and reliable and may be changed without notice. No liability will be accepted by the publisher for any consequence of its use. Publication thereof does not convey nor imply any license under patent- or other industrial or intellectual property rights.

Printed in The Netherlands 613502/01/pp20 Date of release: 2000 Dec 05 Document order number: 9397 750 07298

Let's make things better.

Philips Semiconductors

PHILIPS