Tel: +44 1460 256 100
Fax: +44 1460 256 101
www.golledge.com

Golledge Electronics Ltd
Eaglewood Park, ILMINSTER
Somerset, TA19 9DQ, UK

Dual SAW Filter 390.0MHz/420.0MHz — Model: TE0115A

Part No: MP05083 — Rev No: 1

A. MAXIMUM RATING OF FILTER 1:

Electrostatic **S**ensitive **D**evice (**ESD**)

1. Input Power Level: 12dBm
2. DC Voltage: 3V
3. Operating Temperature: -30°C to +85°C
4. Storage Temperature: -40°C to +85°C

B. ELECTRICAL CHARACTERISTICS OF FILTER 1:

Item	Unit	Min.	Typ.	Max.	Note
Center Frequency Fc	MHz	-	390	-	-
Insertion Loss (380 ~ 400 MHz) IL	dB	-	2	3.3	-
Amplitude Ripple (380 ~ 400MHz)	dB	-	0.7	2.3	-
Return Loss (380 ~ 400MHz)	dB	8	10	-	-
Attenuation (Reference level from 0dB)					
0.1 ~ 150MHz	dB	35	52	-	-
190 ~ 275MHz	dB	30	56	-	-
275 ~ 287MHz	dB	33	56	-	-
304 ~ 335MHz	dB	30	50	-	-
342 ~ 360MHz	dB	20	40	-	-
418 ~ 440MHz	dB	15	18	-	-
442 ~ 455MHz	dB	25	47	-	-
456 ~ 531MHz	dB	30	47	-	-
532 ~ 560MHz	dB	33	40	-	-
570 ~ 600MHz	dB	25	45	-	-
632 ~ 668MHz	dB	35	45	-	-
684 ~ 1000MHz	dB	27	37	-	-
Temperature Coefficient of Frequency	ppm/°C	-	-80	-	-

Tel: +44 1460 256 100
Fax: +44 1460 256 101
www.golledge.com

Golledge Electronics Ltd
Eaglewood Park, ILMINSTER
Somerset, TA19 9DQ, UK

C. MAXIMUM RATING of FILTER 2:

Electrostatic **S**ensitive **D**evice (**ESD**)

1. Input Power Level: 12dBm
2. DC Voltage: 3V
3. Operating Temperature: -30°C to +85°C
4. Storage Temperature: -40°C to +85°C

D. ELECTRICAL CHARACTERISTICS of FILTER 2:

Item	Unit	Min.	Typ.	Max.	Note
Center Frequency Fc	MHz	-	420	-	-
Insertion Loss (410 ~ 430MHz) IL	dB	-	2.2	3.3	-
Amplitude Ripple (410 ~ 430MHz)	dB	-	0.7	2.2	-
Return Loss (410 ~ 430MHz)	dB	8.5	9	-	-
Attenuation (Reference level from 0dB)					
0.1 ~ 150MHz	dB	35	52	-	-
204 ~ 216MHz	dB	30	60	-	-
246 ~ 270MHz	dB	30	58	-	-
272 ~ 301MHz	dB	35	56	-	-
328 ~ 344MHz	dB	30	52	-	-
345 ~ 360MHz	dB	25	49	-	-
369 ~ 387MHz	dB	18	43	-	-
451 ~ 473MHz	dB	18	20	-	-
477 ~ 491MHz	dB	25	48	-	-
492 ~ 516MHz	dB	30	45	-	-
532 ~ 573MHz	dB	30	44	-	-
557 ~ 577MHz	dB	38	46	-	-
574 ~ 602MHz	dB	33	45	-	-
602 ~ 1000MHz	dB	27	38	-	-
Temperature Coefficient of Frequency	ppm/°C	-	-80	-	-

Tel: +44 1460 256 100
Fax: +44 1460 256 101
www.golledge.com

Golledge Electronics Ltd
Eaglewood Park, ILMINSTER
Somerset, TA19 9DQ, UK

E. OUTLINE DRAWING:

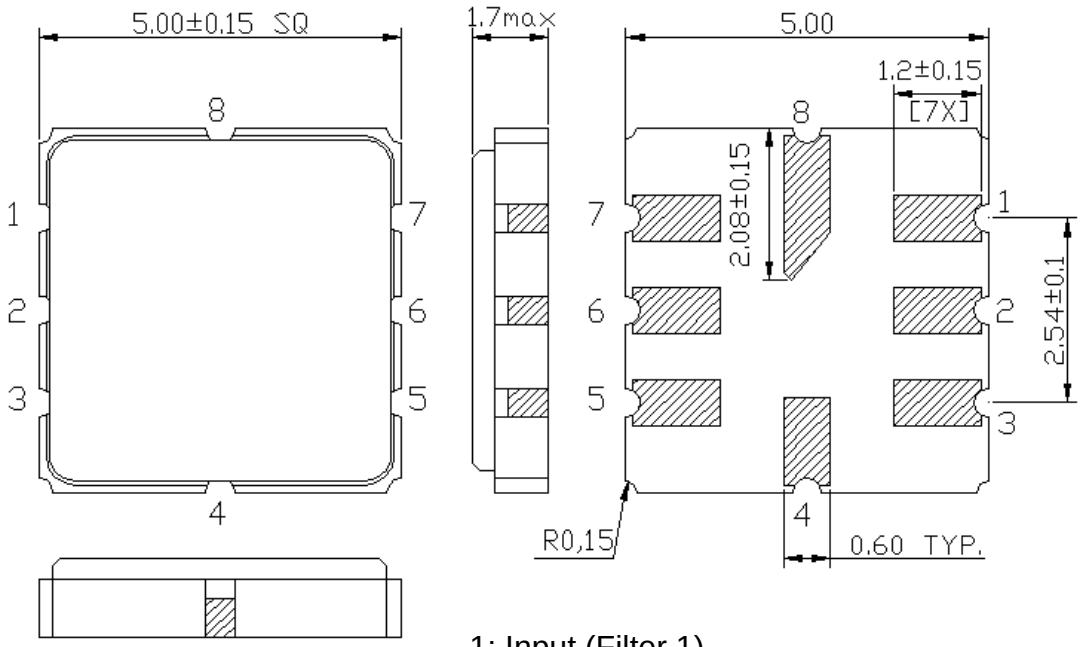

1: Input (Filter 1)
3: Input (Filter 2)
5: Output (Filter 2)
7: Output (Filter 1)
2, 6: To be grounded
4, 8: Case ground

F. PCB FOOTPRINT:

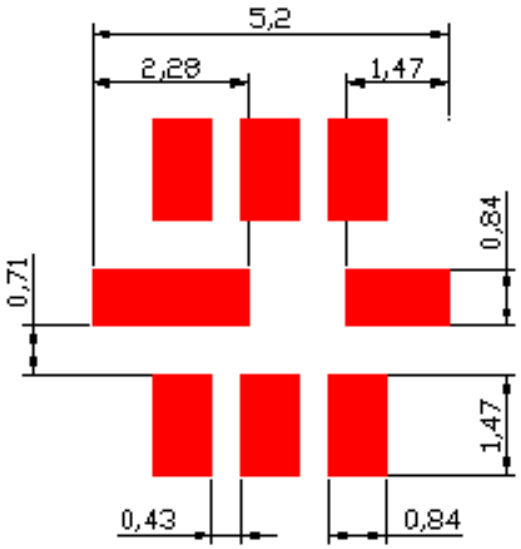

Tel: +44 1460 256 100
Fax: +44 1460 256 101
www.golledge.com

Golledge Electronics Ltd
Eaglewood Park, ILMINSTER
Somerset, TA19 9DQ, UK

G. FREQUENCY CHARACTERISTICS: (FILTER 1)

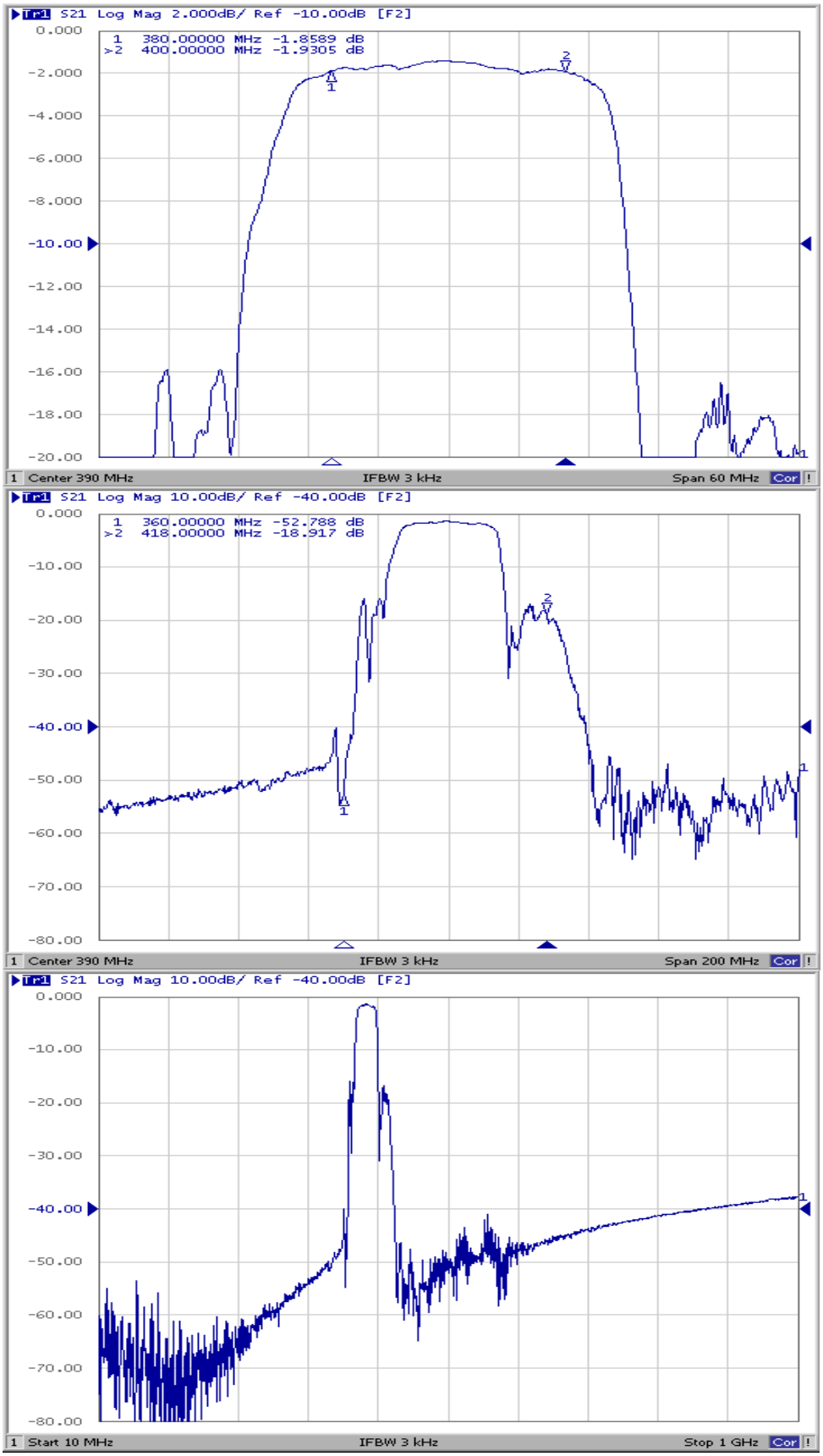

Tel: +44 1460 256 100
Fax: +44 1460 256 101
www.golledge.com

Golledge Electronics Ltd
Eaglewood Park, ILMINSTER
Somerset, TA19 9DQ, UK

Reflection Functions: (Filter 1)

S11

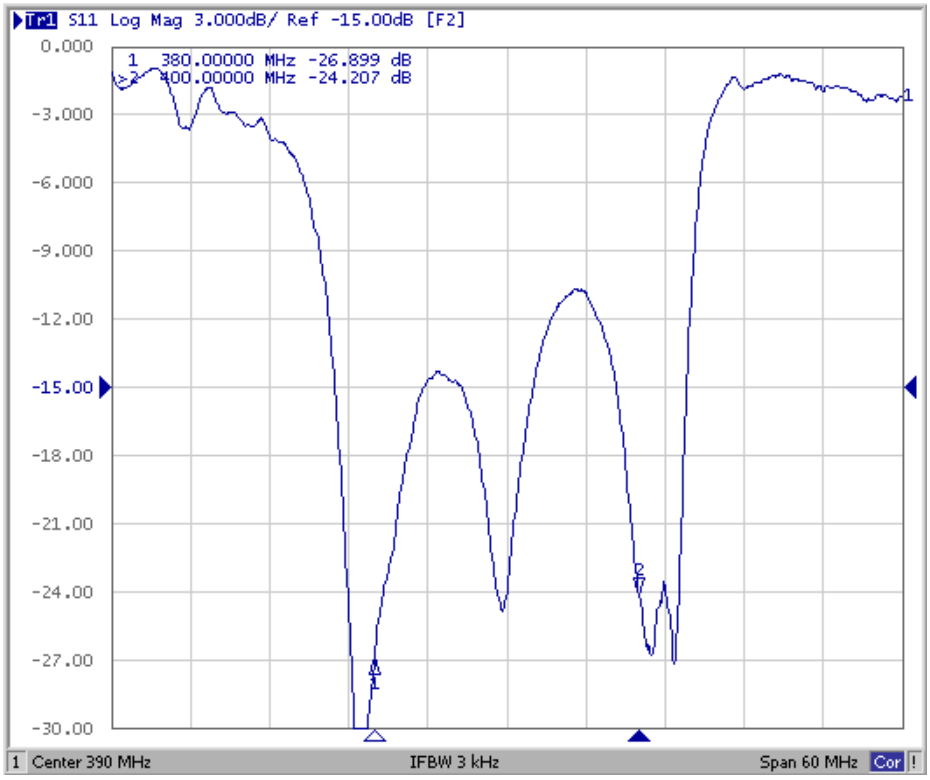

S22

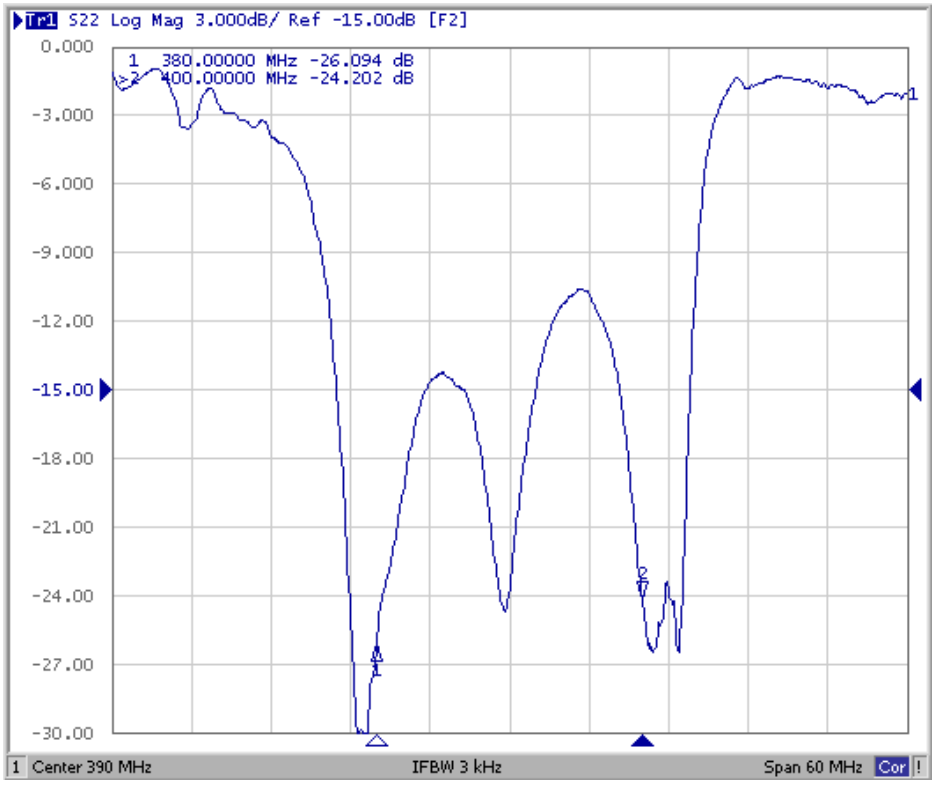

Tel: +44 1460 256 100
Fax: +44 1460 256 101
www.golledge.com

Golledge Electronics Ltd
Eaglewood Park, ILMINSTER
Somerset, TA19 9DQ, UK

H. FREQUENCY CHARACTERISTICS: (FILTER 2)

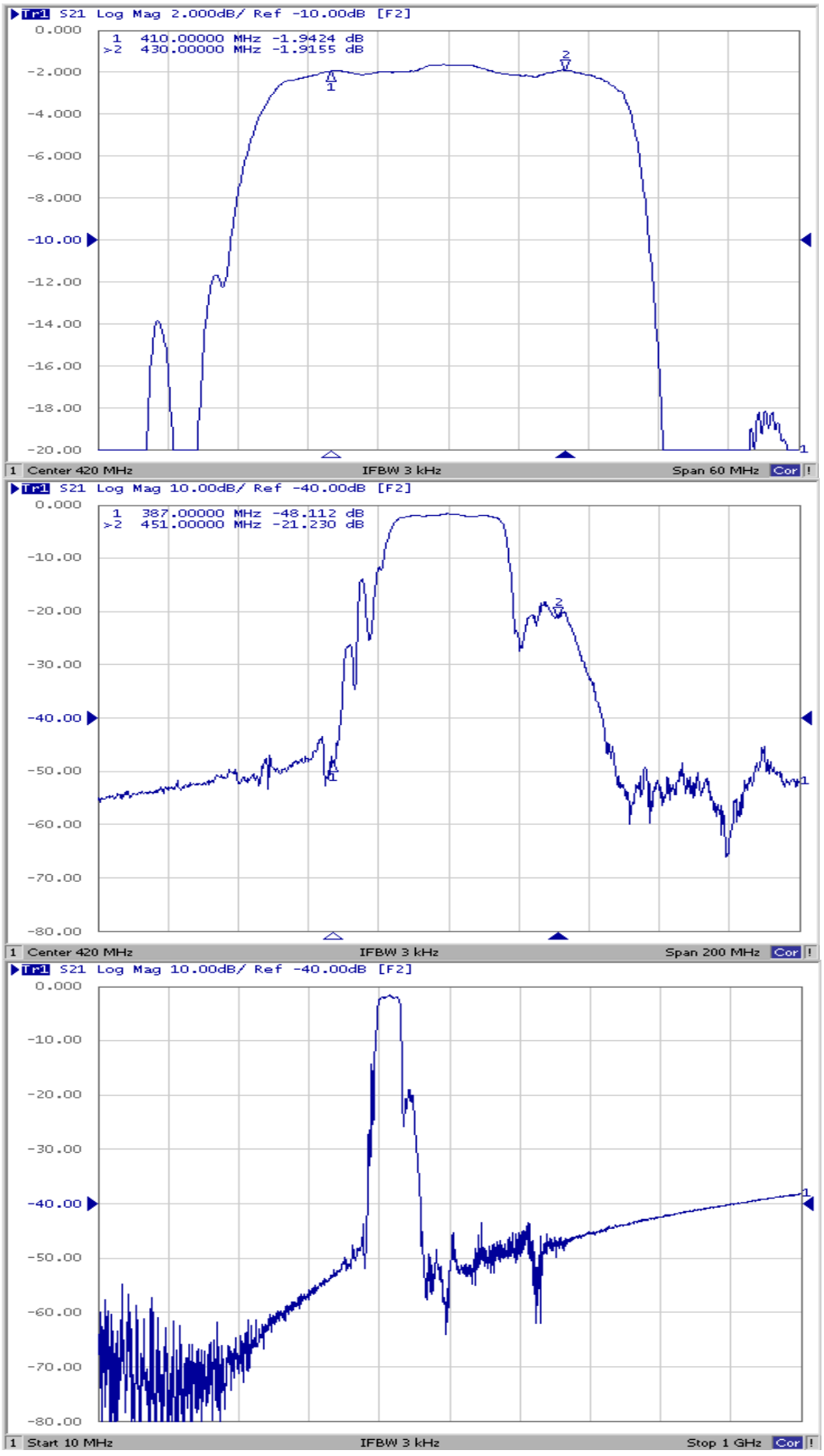

Tel: +44 1460 256 100
Fax: +44 1460 256 101
www.golledge.com

Golledge Electronics Ltd
Eaglewood Park, ILMINSTER
Somerset, TA19 9DQ, UK

Reflection Functions: (Filter 2)

S11

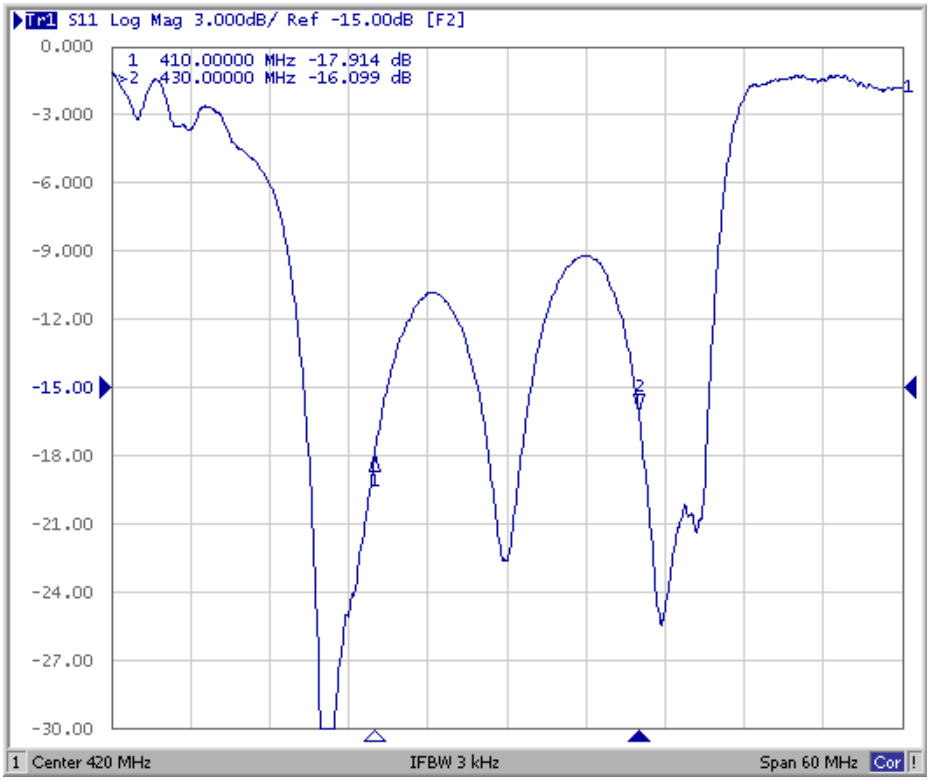

S22

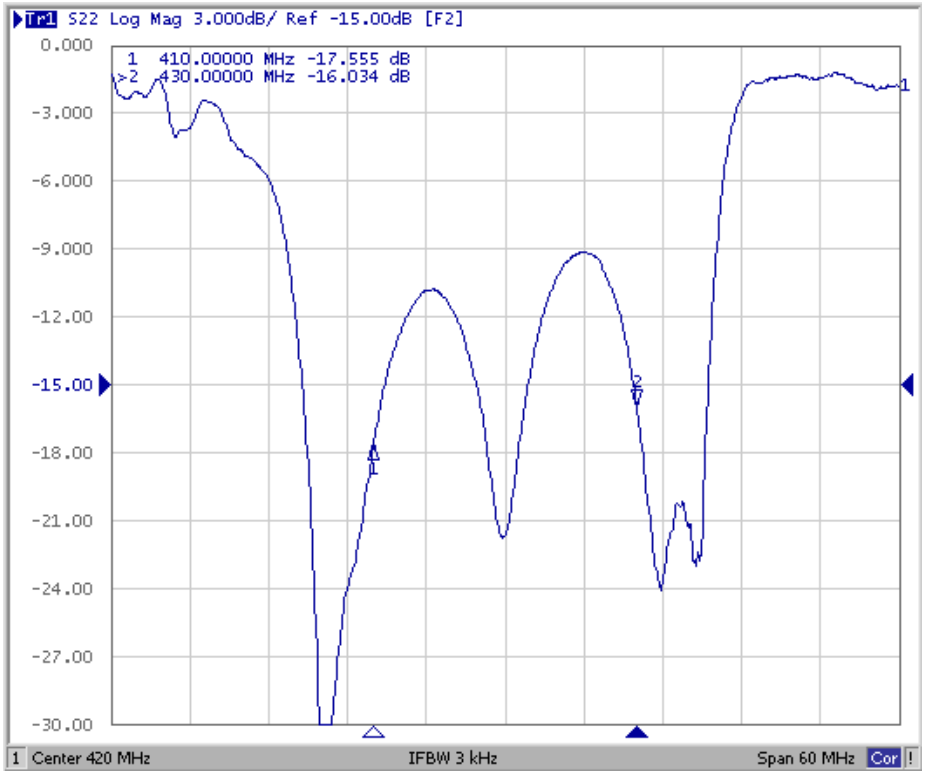

Tel: +44 1460 256 100
Fax: +44 1460 256 101
www.golledge.com

Golledge Electronics Ltd
Eaglewood Park, ILMINSTER
Somerset, TA19 9DQ, UK

I. PACKING:

1. Reel Dimension (Please refer to FR-75D10 for packing quantity)

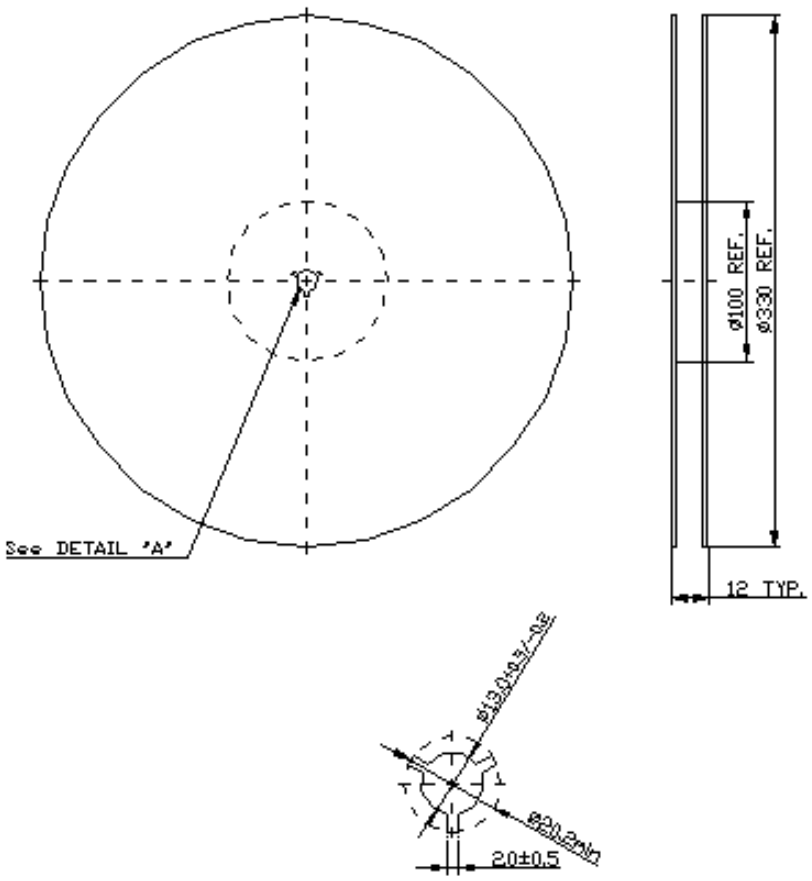

2. Tape Dimension

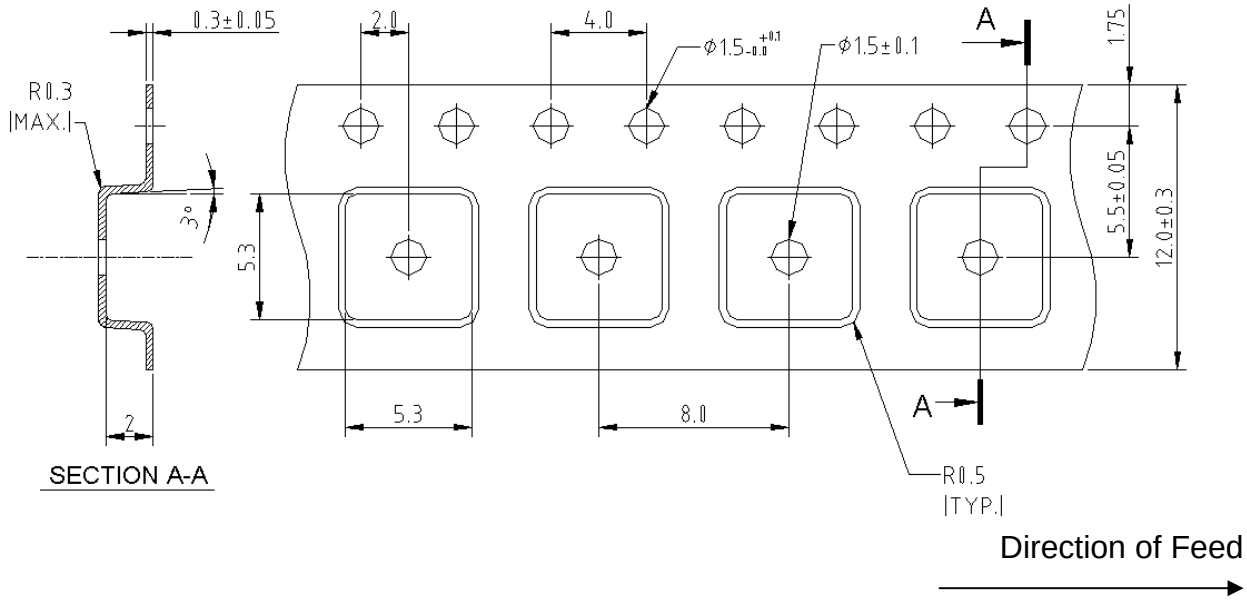

Tel: +44 1460 256 100
Fax: +44 1460 256 101
www.golledge.com

Golledge Electronics Ltd
Eaglewood Park, ILMINSTER
Somerset, TA19 9DQ, UK

J. RECOMMENDED REFLOW PROFILE:

1. Preheating shall be fixed at 150 ~ 180°C for 60 ~ 90 seconds.
2. Ascending time to preheating temperature 150°C shall be 30 seconds min.
3. Heating shall be fixed at 220°C for 50 ~ 80 seconds and at 245 ~ 260°C peak (min. 10sec).
4. Time: 2 times.

