DATA SHEET

TDA8510J
26 W BTL and 2 × 13 W SE power amplifiers

Preliminary specification
Supersedes data of 1999 Jun 14
File under Integrated Circuits, IC01

1999 Dec 14

Philips Semiconductors

PHILIPS

26 W BTL and 2 × 13 W SE power amplifiers

TDA8510J

FEATURES

- Requires very few external components
- High output power
- Low output offset voltage (BTL channel)
- Fixed gain
- Diagnostic facility (distortion, short-circuit and temperature detection)
- Good ripple rejection
- Mode select switch (operating, mute and standby)
- AC and DC short-circuit safe to ground and to V_P
- Low power dissipation in any short-circuit condition
- Thermally protected
- Reverse polarity safe
- Electrostatic discharge protection
- No switch-on/switch-off plop
- Flexible leads
- Low thermal resistance
- Identical inputs (inverting and non-inverting).

GENERAL DESCRIPTION

The TDA8510J is an integrated class-B output amplifier in a 17-lead single-in-line (SIL) power package. It contains a 26 W Bridge-Tied Load (BTL) amplifier and 2 × 13 W Single-Ended (SE) amplifiers.

The device is primarily developed for multi-media applications and active speaker systems (stereo with subwoofer).

QUICK REFERENCE DATA

SYMBOL	PARAMETER	CONDITIONS	MIN.	TYP.	MAX.	UNIT
General						
V_P	supply voltage		6	15	18	V
I_{ORM}	repetitive peak output current		–	–	4	A
$I_{q(tot)}$	total quiescent current		–	80	–	mA
I_{stb}	standby current		–	0.1	100	μA
BTL channel						
P_o	output power	R_L = 4 Ω; THD = 10%	–	26	–	W
SVRR	supply voltage ripple rejection		46	–	–	dB
$V_{n(o)}$	noise output voltage	R_s = 0 Ω	–	70	–	μV
$\lvert Z_i \rvert$	input impedance		25	–	–	kΩ
$\lvert \Delta V_{OO} \rvert$	DC output offset voltage		–	–	150	mV
Single-ended channels						
P_o	output power	THD = 10%				
		R_L = 4 Ω	–	7	–	W
		R_L = 2 Ω	–	13	–	W
SVRR	supply voltage ripple rejection		46	–	–	dB
$V_{n(o)}$	noise output voltage	R_s = 0 Ω	–	50	–	μV
$\lvert Z_i \rvert$	input impedance		50	–	–	kΩ

ORDERING INFORMATION

TYPE NUMBER	PACKAGE		
	NAME	DESCRIPTION	VERSION
TDA8510J	DBS17P	plastic DIL-bent-SIL power package; 17 leads (lead length 12 mm)	SOT243-1

BLOCK DIAGRAM

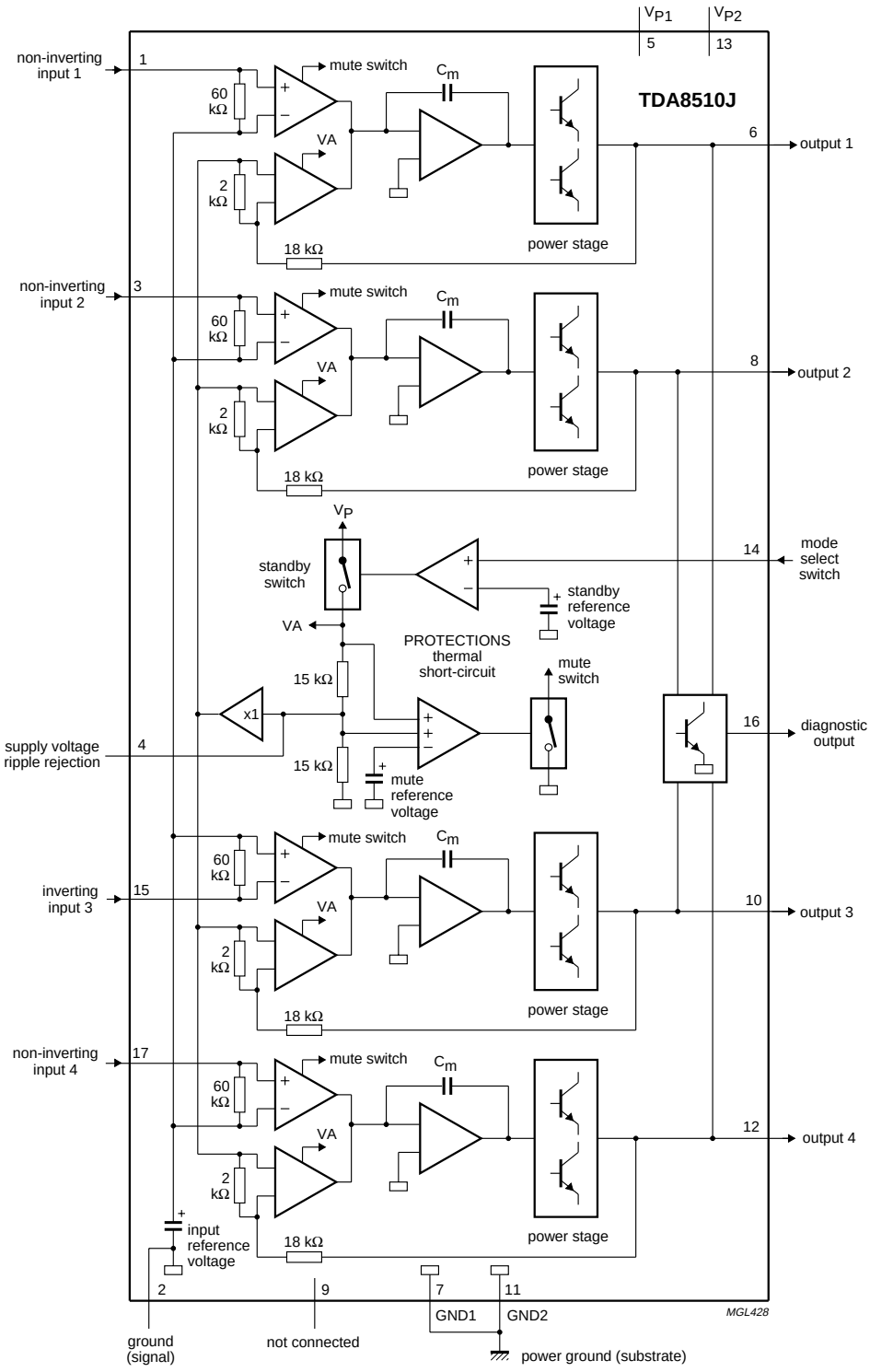

Fig.1 Block diagram.

PINNING

SYMBOL	PIN	DESCRIPTION
–INV1	1	non-inverting input 1
SGND	2	signal ground
–INV2	3	non-inverting input 2
RR	4	supply voltage ripple rejection
V_{P1}	5	supply voltage 1
OUT1	6	output 1
GND1	7	power ground 1
OUT2	8	output 2
n.c.	9	not connected
OUT3	10	output 3
GND2	11	power ground 2
OUT4	12	output 4
V_{P2}	13	supply voltage 2
MODE	14	mode select switch input
INV3	15	inverting input 3
V_{DIAG}	16	diagnostic output
–INV4	17	non-inverting input 4

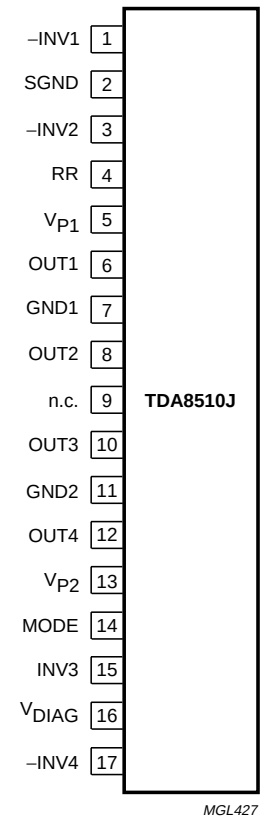

Fig.2 Pin configuration.

FUNCTIONAL DESCRIPTION

The TDA8510J contains four identical amplifiers and can be used for two Single-Ended (SE) channels (fixed gain 20 dB) and one Bridge-Tied Load (BTL) channel (fixed gain 26 dB). Special features of the device are:

Mode select switch (pin 14)

- Low standby current (<100 μA)
- Low switching current (low cost supply switch)
- Mute facility.

To avoid switch-on plops, it is advised to keep the amplifier in the mute mode during ≥100 ms (charging of the input capacitors at pins 1, 3, 15 and 17). This can be achieved by:

- Microcontroller control
- External timing circuit (see Fig.8).

Diagnostic output (pin 16)

DYNAMIC DISTORTION DETECTOR (DDD)

At the onset of clipping of one or more output stages, the dynamic distortion detector becomes active and pin 16 goes LOW. This information can be used to drive a sound processor or DC volume control to attenuate the input signal and thus limit the distortion. The output level of pin 16 is independent of the number of channels that are clipping (see Figs 3 and 4).

SHORT-CIRCUIT PROTECTION

When a short-circuit occurs at one or more outputs to ground or to the supply voltage, the output stages are switched off until the short-circuit is removed and the device is switched on again, with a delay of approximately 20 ms, after removal of the short-circuit. During this short-circuit condition, pin 16 is continuously LOW.

When a short-circuit across the load of one or more channels occurs the output stages are switched off for approximately 20 ms. After that time it is checked during approximately 50 μs to see whether the short-circuit is still present. Due to this duty cycle of 50 μs/20 ms the average current consumption during this short-circuit condition is very low (approximately 40 mA).

During this short-circuit condition, pin 16 is LOW for 20 ms and HIGH for 50 μs (see Fig.5).

The power dissipation in any short-circuit condition is very low.

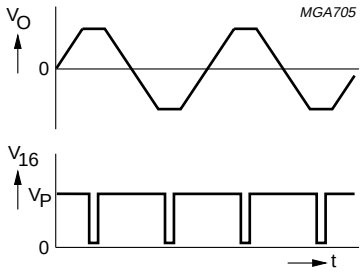

Fig.3 Distortion detector waveform; BTL channel.

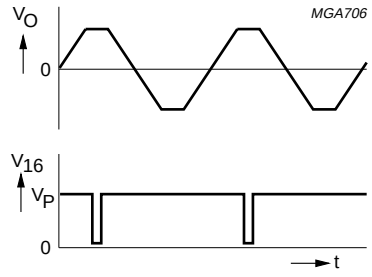

Fig.4 Distortion detector waveform; SE channels.

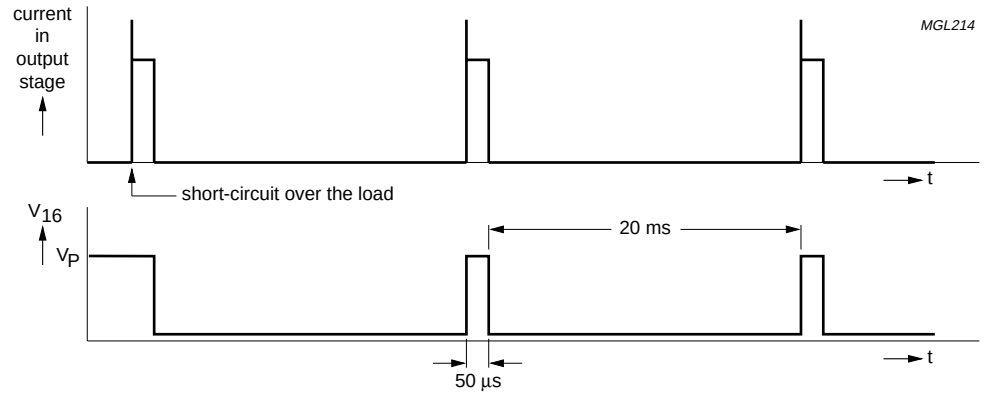

Fig.5 Short-circuit waveform.

TEMPERATURE DETECTION

When the virtual junction temperature T_{vj} reaches 150 °C, pin 16 will be active LOW.

OPEN-COLLECTOR OUTPUT

Pin 16 is an open-collector output, which allows pin 16 of more devices being tied together.

LIMITING VALUES

In accordance with the Absolute Maximum Rating System (IEC 134).

SYMBOL	PARAMETER	CONDITIONS	MIN.	MAX.	UNIT
V_P	supply voltage	operating	–	18	V
		no signal	–	20	V
I_{OSM}	non-repetitive peak output current		–	6	A
I_{ORM}	repetitive peak output current		–	4	A
V_{sc}	AC and DC short-circuit safe voltage		–	18	V
V_{rp}	reverse polarity voltage		–	6	V
P_{tot}	total power dissipation		–	60	W
T_{stg}	storage temperature		–55	+150	°C
T_{amb}	operating ambient temperature		–40	+85	°C
T_{vj}	virtual junction temperature		–	150	°C

THERMAL CHARACTERISTICS

In accordance with IEC 747-1.

SYMBOL	PARAMETER	CONDITIONS	VALUE	UNIT
$R_{th(j-a)}$	thermal resistance from junction to ambient	in free air	40	K/W
$R_{th(j-c)}$	thermal resistance from junction to case (see Fig.6)		1.3	K/W

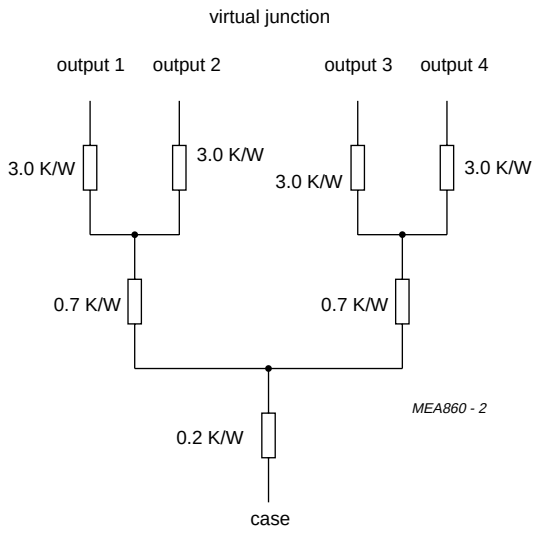

Fig.6 Equivalent thermal resistance network.

DC CHARACTERISTICS

V_P = 15 V; T_{amb} = 25 °C; measured in Fig.7; unless otherwise specified.

SYMBOL	PARAMETER	CONDITIONS	MIN.	TYP.	MAX.	UNIT
Supply						
V_P	supply voltage	note 1	6	15	18	V
$I_{q(tot)}$	total quiescent current		–	80	160	mA
V_O	DC output voltage		–	6.9	–	V
$\lvert\Delta V_{OO}\rvert$	DC output offset voltage	note 2	–	–	150	mV
Mode select switch						
$V_{SW(on)}$	switch-on voltage level		8.5	–	–	V
MUTE CONDITION						
V_{mute}	mute voltage		3.3	–	6.4	V
V_O	output voltage in mute position	$V_{I(max)}$ = 1 V; f = 1 kHz	–	–	2	mV
$\lvert\Delta V_{OO}\rvert$	DC output offset voltage	note 2	–	–	150	mV
STANDBY CONDITION						
V_{stb}	standby voltage		0	–	2	V
I_{stb}	standby current		–	–	100	µA
$I_{sw(on)}$	switch-on current		–	12	40	µA
Diagnostic output (pin 16)						
V_{DIAG}	diagnostic output voltage	any short-circuit or clipping	–	–	0.6	V

Notes

1. The circuit is DC adjusted at V_P = 6 to 18 V and AC operating at V_P = 8.5 to 18 V.
2. Only for BTL channel (V_{12-10}).

AC CHARACTERISTICS

V_P = 15 V; f = 1 kHz; T_{amb} = 25 °C; measure in Fig.7; unless otherwise specified.

SYMBOL	PARAMETER	CONDITIONS	MIN.	TYP.	MAX.	UNIT
BTL channel						
P_o	output power	note 1				
		THD = 0.5%	16	20	–	W
		THD = 10%	22	26	–	W
THD	total harmonic distortion	P_o = 1 W	–	0.06	–	%
B	power bandwidth	THD = 0.5%; P_o = –1 dB; with respect to 16 W	–	20 to 15000	–	Hz
$f_{ro(l)}$	low frequency roll-off	at –1 dB; note 2	–	25	–	Hz
$f_{ro(h)}$	high frequency roll-off	at –1 dB	20	–	–	kHz
G_v	closed loop voltage gain		25	26	27	dB
SVRR	supply voltage ripple rejection	note 3				
		on	48	–	–	dB
		mute	46	–	–	dB
		standby	80	–	–	dB
$\|Z_i\|$	input impedance		25	30	38	kΩ
$V_{n(o)}$	noise output voltage	on; R_s = 0 Ω; note 4	–	70	–	μV
		on; R_s = 10 kΩ; note 4	–	100	200	μV
		mute; notes 4 and 5	–	60	–	μV
α_{cs}	channel separation	R_s = 10 kΩ	40	60	–	dB
DYNAMIC DISTORTION DETECTOR						
THD	total harmonic distortion	$V_{16} \leq$ 0.6 V; no short-circuit	–	10	–	%

SYMBOL	PARAMETER	CONDITIONS	MIN.	TYP.	MAX.	UNIT
Single-ended channels						
P_o	output power	note 1				
		THD = 0.5%	8	10	–	W
		THD = 10%	11	13	–	W
		R_{L1} = 4 Ω; note 1				
		THD = 0.5%	–	5.5	–	W
		THD = 10%	–	7	–	W
THD	total harmonic distortion	P_o = 1 W	–	0.06	–	%
$f_{ro(l)}$	low frequency roll-off	at –1 dB; note 2	–	25	–	Hz
$f_{ro(h)}$	high frequency roll-off	at –1 dB	20	–	–	kHz
G_v	closed loop voltage gain		19	20	21	dB
SVRR	supply voltage ripple rejection	note 3				
		on	48	–	–	dB
		mute	46	–	–	dB
		standby	80	–	–	dB
$\lvert Z_i \rvert$	input impedance		50	60	75	kΩ
$V_{n(o)}$	noise output voltage	on; R_s = 0 Ω; note 4	–	50	–	μV
		on; R_s = 10 kΩ; note 4	–	70	100	μV
		mute; notes 4 and 5	–	50	–	μV
α_{cs}	channel separation	R_s = 10 kΩ	40	60	–	dB
$\lvert \Delta G_v \rvert$	channel unbalance		–	–	1	dB
DYNAMIC DISTORTION DETECTOR						
THD	total harmonic distortion	$V_{16} \leq 0.6$ V; no short-circuit	–	10	–	%

Notes

1. Output power is measured directly at the output pins of the IC.
2. Frequency response externally fixed.
3. Ripple rejection measured at the output with a source impedance of 0 Ω, maximum ripple amplitude of 2 V (p-p) and at a frequency of between 100 Hz and 10 kHz.
4. Noise measured in a bandwidth of 20 Hz to 20 kHz.
5. Noise output voltage independent of R_s (V_i = 0 V).

TEST AND APPLICATION INFORMATION

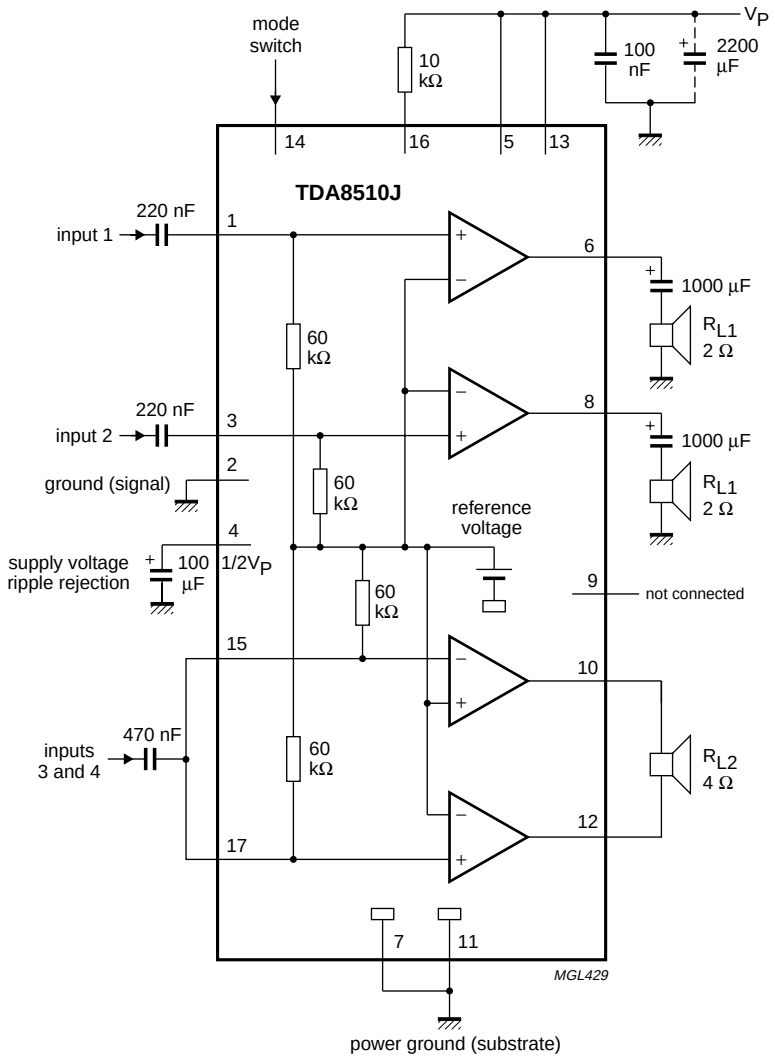

Fig.7 Application diagram.

Mode select switch

To avoid switch-on plops, it is advised to keep the amplifier in the mute mode during >100 ms (charging of the input capacitors at pins 1, 3, 15 and 17.

The circuit in Fig.8 slowly ramps up the voltage at the mode select switch pin when switching on and results in fast muting when switching off.

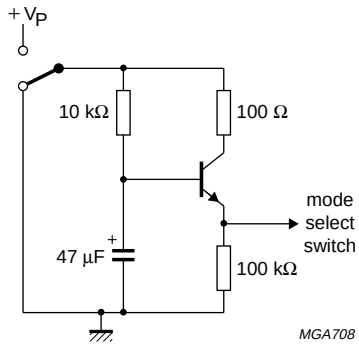

Fig.8 Mode select switch circuitry.

PACKAGE OUTLINE

DBS17P: plastic DIL-bent-SIL power package; 17 leads (lead length 12 mm) **SOT243-1**

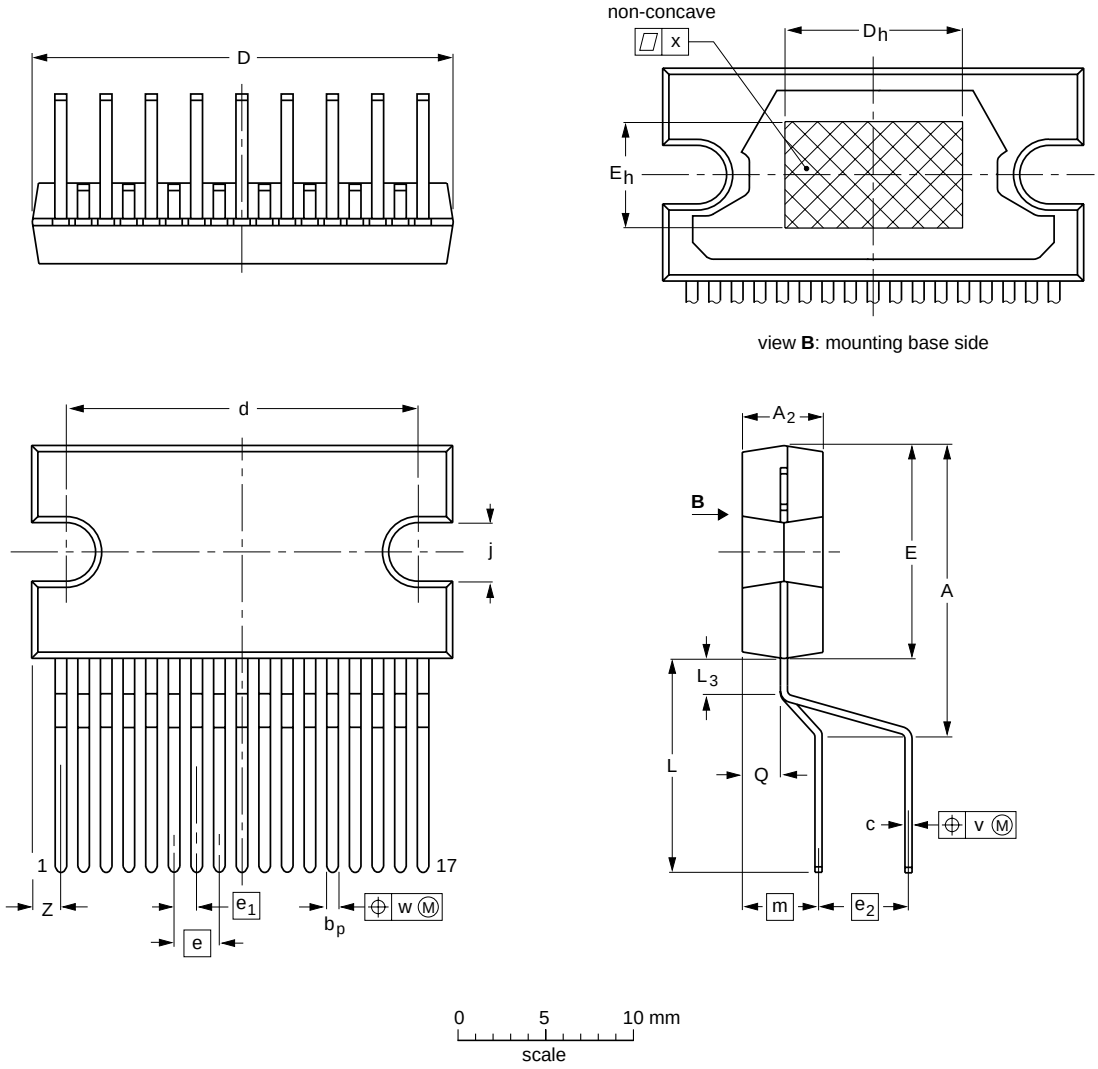

DIMENSIONS (mm are the original dimensions)

UNIT	A	A_2	b_p	c	$D^{(1)}$	d	D_h	$E^{(1)}$	e	e_1	e_2	E_h	j	L	L_3	m	Q	v	w	x	$Z^{(1)}$
mm	17.0 15.5	4.6 4.2	0.75 0.60	0.48 0.38	24.0 23.6	20.0 19.6	10	12.2 11.8	2.54	1.27	5.08	6	3.4 3.1	12.4 11.0	2.4 1.6	4.3	2.1 1.8	0.8	0.4	0.03	2.00 1.45

Note

1. Plastic or metal protrusions of 0.25 mm maximum per side are not included.

OUTLINE VERSION	REFERENCES				EUROPEAN PROJECTION	ISSUE DATE
	IEC	JEDEC	EIAJ			
SOT243-1						~~95-03-11~~ 97-12-16

SOLDERING

Introduction to soldering through-hole mount packages

This text gives a brief insight to wave, dip and manual soldering. A more in-depth account of soldering ICs can be found in our *"Data Handbook IC26; Integrated Circuit Packages"* (document order number 9398 652 90011).

Wave soldering is the preferred method for mounting of through-hole mount IC packages on a printed-circuit board.

Soldering by dipping or by solder wave

The maximum permissible temperature of the solder is 260 °C; solder at this temperature must not be in contact with the joints for more than 5 seconds.

The total contact time of successive solder waves must not exceed 5 seconds.

The device may be mounted up to the seating plane, but the temperature of the plastic body must not exceed the specified maximum storage temperature ($T_{stg(max)}$). If the printed-circuit board has been pre-heated, forced cooling may be necessary immediately after soldering to keep the temperature within the permissible limit.

Manual soldering

Apply the soldering iron (24 V or less) to the lead(s) of the package, either below the seating plane or not more than 2 mm above it. If the temperature of the soldering iron bit is less than 300 °C it may remain in contact for up to 10 seconds. If the bit temperature is between 300 and 400 °C, contact may be up to 5 seconds.

Suitability of through-hole mount IC packages for dipping and wave soldering methods

PACKAGE	SOLDERING METHOD	
	DIPPING	WAVE
DBS, DIP, HDIP, SDIP, SIL	suitable	suitable[1]

Note

1. For SDIP packages, the longitudinal axis must be parallel to the transport direction of the printed-circuit board.

DEFINITIONS

Data sheet status	
Objective specification	This data sheet contains target or goal specifications for product development.
Preliminary specification	This data sheet contains preliminary data; supplementary data may be published later.
Product specification	This data sheet contains final product specifications.
Limiting values	
Limiting values given are in accordance with the Absolute Maximum Rating System (IEC 134). Stress above one or more of the limiting values may cause permanent damage to the device. These are stress ratings only and operation of the device at these or at any other conditions above those given in the Characteristics sections of the specification is not implied. Exposure to limiting values for extended periods may affect device reliability.	
Application information	
Where application information is given, it is advisory and does not form part of the specification.	

LIFE SUPPORT APPLICATIONS

These products are not designed for use in life support appliances, devices, or systems where malfunction of these products can reasonably be expected to result in personal injury. Philips customers using or selling these products for use in such applications do so at their own risk and agree to fully indemnify Philips for any damages resulting from such improper use or sale.

NOTES

Philips Semiconductors – a worldwide company

Argentina: see South America

Australia: 3 Figtree Drive, HOMEBUSH, NSW 2140,
Tel. +61 2 9704 8141, Fax. +61 2 9704 8139

Austria: Computerstr. 6, A-1101 WIEN, P.O. Box 213,
Tel. +43 1 60 101 1248, Fax. +43 1 60 101 1210

Belarus: Hotel Minsk Business Center, Bld. 3, r. 1211, Volodarski Str. 6,
220050 MINSK, Tel. +375 172 20 0733, Fax. +375 172 20 0773

Belgium: see The Netherlands

Brazil: see South America

Bulgaria: Philips Bulgaria Ltd., Energoproject, 15th floor,
51 James Bourchier Blvd., 1407 SOFIA,
Tel. +359 2 68 9211, Fax. +359 2 68 9102

Canada: PHILIPS SEMICONDUCTORS/COMPONENTS,
Tel. +1 800 234 7381, Fax. +1 800 943 0087

China/Hong Kong: 501 Hong Kong Industrial Technology Centre,
72 Tat Chee Avenue, Kowloon Tong, HONG KONG,
Tel. +852 2319 7888, Fax. +852 2319 7700

Colombia: see South America

Czech Republic: see Austria

Denmark: Sydhavnsgade 23, 1780 COPENHAGEN V,
Tel. +45 33 29 3333, Fax. +45 33 29 3905

Finland: Sinikalliontie 3, FIN-02630 ESPOO,
Tel. +358 9 615 800, Fax. +358 9 6158 0920

France: 51 Rue Carnot, BP317, 92156 SURESNES Cedex,
Tel. +33 1 4099 6161, Fax. +33 1 4099 6427

Germany: Hammerbrookstraße 69, D-20097 HAMBURG,
Tel. +49 40 2353 60, Fax. +49 40 2353 6300

Hungary: see Austria

India: Philips INDIA Ltd, Band Box Building, 2nd floor,
254-D, Dr. Annie Besant Road, Worli, MUMBAI 400 025,
Tel. +91 22 493 8541, Fax. +91 22 493 0966

Indonesia: PT Philips Development Corporation, Semiconductors Division,
Gedung Philips, Jl. Buncit Raya Kav.99-100, JAKARTA 12510,
Tel. +62 21 794 0040 ext. 2501, Fax. +62 21 794 0080

Ireland: Newstead, Clonskeagh, DUBLIN 14,
Tel. +353 1 7640 000, Fax. +353 1 7640 200

Israel: RAPAC Electronics, 7 Kehilat Saloniki St, PO Box 18053,
TEL AVIV 61180, Tel. +972 3 645 0444, Fax. +972 3 649 1007

Italy: PHILIPS SEMICONDUCTORS, Via Casati, 23 - 20052 MONZA (MI),
Tel. +39 039 203 6838, Fax +39 039 203 6800

Japan: Philips Bldg 13-37, Kohnan 2-chome, Minato-ku,
TOKYO 108-8507, Tel. +81 3 3740 5130, Fax. +81 3 3740 5057

Korea: Philips House, 260-199 Itaewon-dong, Yongsan-ku, SEOUL,
Tel. +82 2 709 1412, Fax. +82 2 709 1415

Malaysia: No. 76 Jalan Universiti, 46200 PETALING JAYA, SELANGOR,
Tel. +60 3 750 5214, Fax. +60 3 757 4880

Mexico: 5900 Gateway East, Suite 200, EL PASO, TEXAS 79905,
Tel. +9-5 800 234 7381, Fax +9-5 800 943 0087

Middle East: see Italy

Netherlands: Postbus 90050, 5600 PB EINDHOVEN, Bldg. VB,
Tel. +31 40 27 82785, Fax. +31 40 27 88399

New Zealand: 2 Wagener Place, C.P.O. Box 1041, AUCKLAND,
Tel. +64 9 849 4160, Fax. +64 9 849 7811

Norway: Box 1, Manglerud 0612, OSLO,
Tel. +47 22 74 8000, Fax. +47 22 74 8341

Pakistan: see Singapore

Philippines: Philips Semiconductors Philippines Inc.,
106 Valero St. Salcedo Village, P.O. Box 2108 MCC, MAKATI,
Metro MANILA, Tel. +63 2 816 6380, Fax. +63 2 817 3474

Poland: Al.Jerozolimskie 195 B, 02-222 WARSAW,
Tel. +48 22 5710 000, Fax. +48 22 5710 001

Portugal: see Spain

Romania: see Italy

Russia: Philips Russia, Ul. Usatcheva 35A, 119048 MOSCOW,
Tel. +7 095 755 6918, Fax. +7 095 755 6919

Singapore: Lorong 1, Toa Payoh, SINGAPORE 319762,
Tel. +65 350 2538, Fax. +65 251 6500

Slovakia: see Austria

Slovenia: see Italy

South Africa: S.A. PHILIPS Pty Ltd., 195-215 Main Road Martindale,
2092 JOHANNESBURG, P.O. Box 58088 Newville 2114,
Tel. +27 11 471 5401, Fax. +27 11 471 5398

South America: Al. Vicente Pinzon, 173, 6th floor,
04547-130 SÃO PAULO, SP, Brazil,
Tel. +55 11 821 2333, Fax. +55 11 821 2382

Spain: Balmes 22, 08007 BARCELONA,
Tel. +34 93 301 6312, Fax. +34 93 301 4107

Sweden: Kottbygatan 7, Akalla, S-16485 STOCKHOLM,
Tel. +46 8 5985 2000, Fax. +46 8 5985 2745

Switzerland: Allmendstrasse 140, CH-8027 ZÜRICH,
Tel. +41 1 488 2741 Fax. +41 1 488 3263

Taiwan: Philips Semiconductors, 6F, No. 96, Chien Kuo N. Rd., Sec. 1,
TAIPEI, Taiwan Tel. +886 2 2134 2886, Fax. +886 2 2134 2874

Thailand: PHILIPS ELECTRONICS (THAILAND) Ltd.,
209/2 Sanpavuth-Bangna Road Prakanong, BANGKOK 10260,
Tel. +66 2 745 4090, Fax. +66 2 398 0793

Turkey: Yukari Dudullu, Org. San. Blg., 2.Cad. Nr. 28 81260 Umraniye,
ISTANBUL, Tel. +90 216 522 1500, Fax. +90 216 522 1813

Ukraine: PHILIPS UKRAINE, 4 Patrice Lumumba str., Building B, Floor 7,
252042 KIEV, Tel. +380 44 264 2776, Fax. +380 44 268 0461

United Kingdom: Philips Semiconductors Ltd., 276 Bath Road, Hayes,
MIDDLESEX UB3 5BX, Tel. +44 208 730 5000, Fax. +44 208 754 8421

United States: 811 East Arques Avenue, SUNNYVALE, CA 94088-3409,
Tel. +1 800 234 7381, Fax. +1 800 943 0087

Uruguay: see South America

Vietnam: see Singapore

Yugoslavia: PHILIPS, Trg N. Pasica 5/v, 11000 BEOGRAD,
Tel. +381 11 62 5344, Fax.+381 11 63 5777

For all other countries apply to: Philips Semiconductors,
International Marketing & Sales Communications, Building BE-p, P.O. Box 218,
5600 MD EINDHOVEN, The Netherlands, Fax. +31 40 27 24825

Internet: http://www.semiconductors.philips.com

© Philips Electronics N.V. 1999 SCA 68

All rights are reserved. Reproduction in whole or in part is prohibited without the prior written consent of the copyright owner.

The information presented in this document does not form part of any quotation or contract, is believed to be accurate and reliable and may be changed without notice. No liability will be accepted by the publisher for any consequence of its use. Publication thereof does not convey nor imply any license under patent- or other industrial or intellectual property rights.

Printed in The Netherlands 545002/03/pp16 Date of release: 1999 Dec 14 Document order number: 9397 750 06653

Let's make things better.

Philips Semiconductors

PHILIPS