TDA7901

Data brief

High efficiency digital input automotive quad power amplifier with built-in diagnostics features, Class-G integrated, 'start stop' compatible

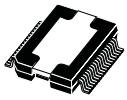

PowerSO36 (Slug-up)

Product status link
TDA7901

Product summary		
Order code	**Package**	**Packing**
TDA7901-ZST	PowerSO36 (Slug-up)	Tape and reel
TDA7901-ZSX		Tube

Features

- AEC-Q100 qualification ongoing
- 24-bit resolution
- High Resolution Bandwidth support:
  - Up to 40 kHz (I^2S 96 kHz) with attenuation [0 dB, -2 dB]
  - Up to 80 kHz (I^2S 192 kHz) with attenuation [0 dB, -2 dB]
- 117 dB dynamic range (A-weighted)
- Real-time load current monitoring
- Voltage monitoring feature on I^2C
- High Efficiency SB-I (SB-Improved) and Class-G operation
- 1 Ω driving capability
- High output power capability:
  - 4 x 27 W 4Ω@ 14.4 V, 1 kHz, THD = 10 %
  - 4 x 47 W 2Ω@ 14.4 V, 1 kHz, THD = 10 %
- Flexible mode control:
  - Full I^2C bus driving (1.8 V/3.3 V) with eight addresses selectable
  - Independent front/rear play/mute
  - Selectable digital gains
  - Very low noise
  - Digital diagnostic with DC and AC load Detections
  - Digital diagnostic with OL and OD in play
  - Current Offset Detection
- EMI compliance evaluated following normative CISPR25
- Start-stop compatibility (operation down to 4.5 V)
- Sample rates: 44.1 kHz, 48 kHz, 96 kHz, 192 kHz
- Flexible serial data port (1.8 V/3.3 V):
  - I^2S standard, TDM 4Ch, TDM 8Ch, TDM 16Ch
- Output Voltage Offset Detector
- Independent front/rear clipping detector
- Programmable diagnostic pin
- CMOS compatible enable pin
- Thermal protection
- Pop free in mute to play transitions and vice versa

Description

The TDA7901 is a single-chip quad-bridge amplifier in advanced BCD technology integrating: a full D/A converter, digital input for direct connection to I^2S (or TDM) and powerful MOSFET output stages.

The integrated D/A converter allows the performance to reach an outstanding 117 dB S/N ratio with more than 117 dB of dynamic range. Moreover the TDA7901 integrates an innovative high efficiency concept, optimized also for uncorrelated music signals. The device implements class G operation mode.

Thanks to this concept, the dissipated “output power” under average listening conditions can be reduced more than the standard class AB devices. The TDA7901 also integrates a programmable PLL that is able to lock at the input frequencies of 64*Fs for all the input configurations.

The device is equipped with a full and advanced diagnostics array that communicates the status of each speaker through the I^2C bus. DIM (Digital-Impedance-Meter) function allows to measure the value of the load. The same I^2C bus allows to control several configurations of the device.

The TDA7901 is able to play music down to 4.5 V supply voltage thus it is compatible with the so-called 'start stop' battery profile. Several car makers adopt 'Start stop' feature to reduce the fuel consumption and the impact over the environment.

Moreover, TDA7901 guarantees EMI outstanding performance, in line with the CISPR25-restrictive standard requirement.

1 Block diagram and pins description

1.1 Block diagram

Figure 1. Block diagram

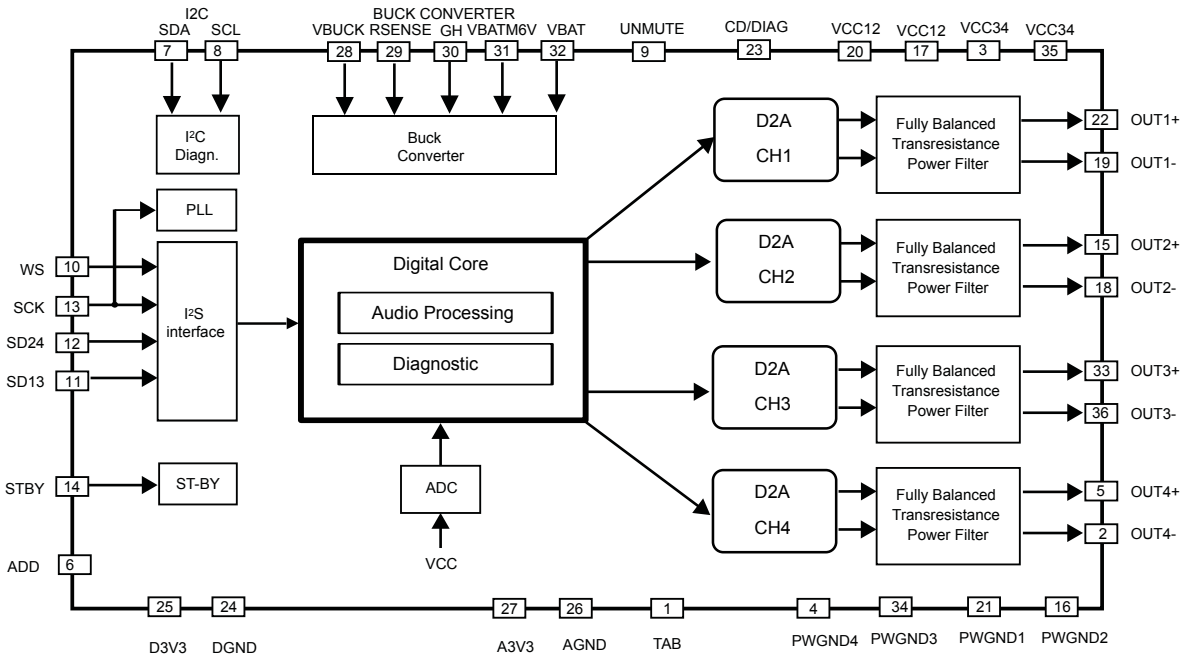

1.2 Pin description

Figure 2. Pin connection

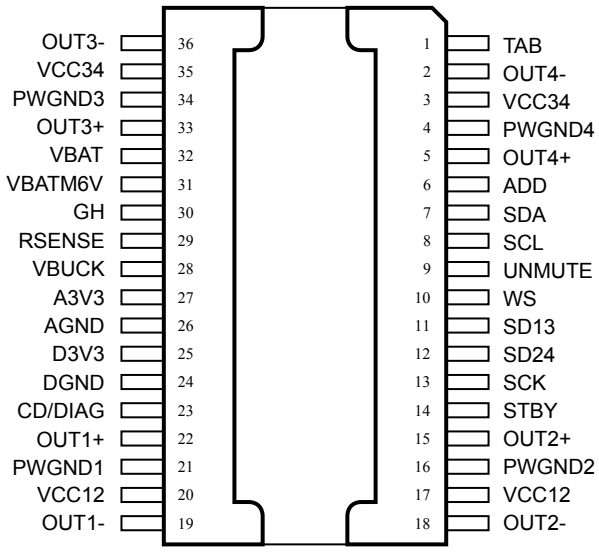

GADG0310171514PS

Table 1. Pin description

N°	Pin	Function	Definition
1	TAB	TAB connection	Internal
2	OUT4-	Channel 4 (right rear) negative output	Power Output
3	VCC34	Channel 3 and 4 positive supply	Power Supply
4	PWGND4	Power ground channel 4	Power Ground
5	OUT4+	Channel 4 (right rear) positive output	Power Output
6	ADD	I^2C Address	Logic Input
7	SDA	I^2C data	Logic Input
8	SCL	I^2C clock	Logic Input
9	UNMUTE	Hardware Unmute	Logic Input
10	WS	Word select (I^2S bus)	Logic Input
11	SD13	Serial data channel 1 and 3 (I^2S bus)	Logic Input
12	SD24	Serial data channel 2 and 4 (I^2S bus)	Logic Input/Output (Push-Pull when it is configured as output)
13	SCK	Serial clock (I^2S bus)	Logic Input
14	STBY	STBY pin	Logic Input
15	OUT2+	Channel 2 (Left Rear) positive output	Power Output
16	PWGND2	Power ground channel 2	Power Ground
17	VCC12	Channel 1 and 2 positive supply	Power Supply
18	OUT2-	Channel 2 (Left Rear) negative output	Power Output
19	OUT1-	Channel 1 (Left Front) negative output	Power Output
20	VCC12	Channel 1 and 2 positive supply	Power Supply
21	PWGND1	Power ground channel 1	Power Ground
22	OUT1+	Channel 1 (Left Front) positive output	Power Output
23	CD/DIAG	Clip detector and diagnostic output	Open Drain
24	DGND	Digital ground	Supply Ground
25	D3V3	Digital 3.3V supply filter	Internal
26	AGND	Analog ground	Supply Ground
27	A3V3	Analog 3.3V supply filter	Internal
28	VBUCK	BUCK regulated voltage output (to internal voltage monitor)	Power Supply
29	RSENSE	Current Sense Input	Logic Input
30	GH	Gate driver for external P channel MOS	Logic Output
31	VBATM6V	Internal regulator *(VBAT-6V)* to supply buck driver	Internal
32	VBAT	Battery Supply for Buck and common blocks	Supply
33	OUT3+	Channel 3 (right front) positive output	Power Output
34	PWGND3	Power ground channel 3	Power Ground
35	VCC34	Channel 3 and 4 positive supply	Power Supply
36	OUT3-	Channel 3 (right front) negative output	Power Output

2 Electrical specifications

2.1 Thermal data

Table 2. **Thermal data**

Symbol	Parameter	Value	Unit
$R_{th\ j\text{-}case}$	Thermal resistance junction-to-case (max.)	1	°C/W

3 General description

The TDA7901 is a 4-bridge channel amplifier featuring a powerful integrated digital to analog converter, ensuring high audio quality and immunity from any input disturbances. Moreover, it combines the advantages of the Class-G solution to the improved high efficiency (SB-I) already embedded in the TDA780x running family. Class-G works based on an integrated buck controller that automatically adjusts the voltage rail depending on the audio signal level thus optimizing efficiency at each output level. Thanks to this innovative combination of features, the TDA7901 is nearly as efficient as a Class-D amplifier when providing the normal listening level of audio power (1 W).

In addition, by integrating full in-play diagnostics as well as a digital impedance meter and real-time load-current monitor the TDA7901 is aligned with the most advanced audio amplifiers and with the most demanding OEM requirements.

Finally, TDA7901 complies with the highest audio quality standards, such as exceptionally low noise (< 20 µV), very high Dynamic Range (117 dB), and support HD (high definition) audio as well with a frequency response flat until 80 kHz.

TDA7901 works over a 4.5-18 V operating range on 4 Ω loads and it is housed in a compact PowerSO36 that helps to reduce the overall system space occupation and cost.

Thanks to the above mentioned features and also considering the better EMC performances, the TDA7901 can offer a wide range of advantages compared to a class D application, including the reduced system space occupation for mid-power operation.

4 Package information

In order to meet environmental requirements, ST offers these devices in different grades of ECOPACK packages, depending on their level of environmental compliance. ECOPACK specifications, grade definitions and product status are available at: www.st.com. ECOPACK is an ST trademark.

4.1 PowerSO-36 (slug up) package information

Figure 3. PowerSO-36 (slug up) package outline

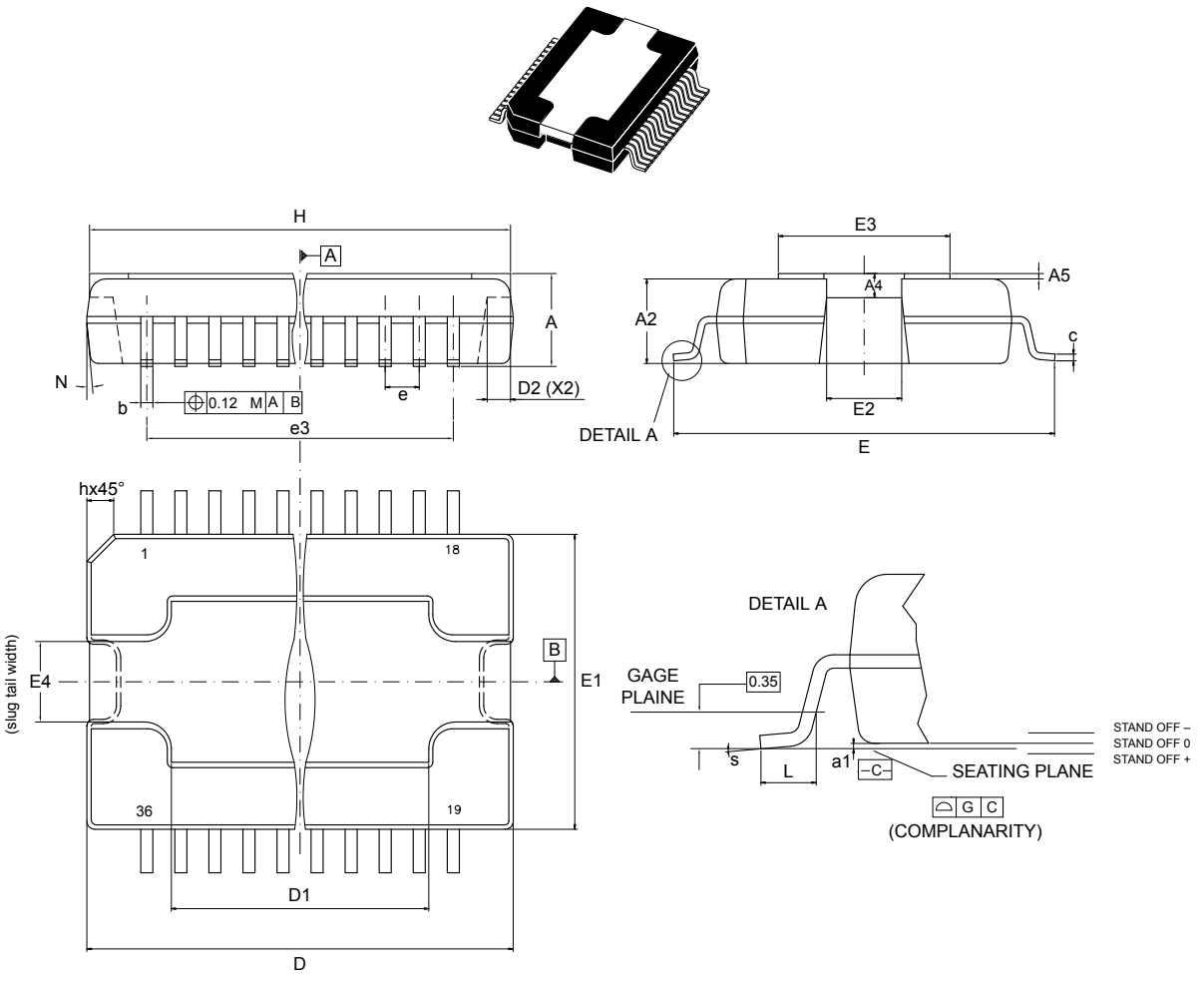

Table 3. PowerSO-36 (slug up) package mechanical data

Ref	Dimensions (mm)		
	Min	Typ	Max
A	3.27	-	3.41
A2	3.1	-	3.18
A4	0.8	-	1
A5	-	0.2	-

Ref	Dimensions (mm)		
	Min	Typ	Max
a1	0.03	-	-0.04
b	0.22	-	0.38
c	0.23	-	0.32
D(1)	15.8	-	16
D1	9.4	-	9.8
D2	-	1	-
E	13.9	-	14.5
E1(1)	10.9	-	11.1
E2	-	-	2.9
E3	5.8	-	6.2
E4	2.9	-	3.2
e	-	0.65	-
e3	-	11.05	-
G	0	-	0.075
H	15.5	-	15.9
h	-	-	1.1
L	0.8	-	1.1
N	-	-	10°
s	-	-	8°

1. *'D' and 'E1' do not include mold flash or protusions. Mold flash or protusions shall not exceed 0.15mm .*

Revision history

Table 4. **Document revision history**

Date	Version	Changes
19-Jan-2022	1	Initial release.

Contents

1 **Block diagram and pins description 3**

1.1 Block diagram 3

1.2 Pin description 3

2 **Electrical specifications 5**

2.1 Thermal data 5

3 **General description 6**

4 **Package information 7**

4.1 PowerSO-36 (slug up) package information 7

Revision history 9

List of tables

Table 1. Pin description . . . 4
Table 2. Thermal data . . . 5
Table 3. PowerSO-36 (slug up) package mechanical data . . . 7
Table 4. Document revision history . . . 9

List of figures

Figure 1. Block diagram 3
Figure 2. Pin connection 3
Figure 3. PowerSO-36 (slug up) package outline 7

IMPORTANT NOTICE – PLEASE READ CAREFULLY

STMicroelectronics NV and its subsidiaries (“ST”) reserve the right to make changes, corrections, enhancements, modifications, and improvements to ST products and/or to this document at any time without notice. Purchasers should obtain the latest relevant information on ST products before placing orders. ST products are sold pursuant to ST’s terms and conditions of sale in place at the time of order acknowledgement.

Purchasers are solely responsible for the choice, selection, and use of ST products and ST assumes no liability for application assistance or the design of Purchasers’ products.

No license, express or implied, to any intellectual property right is granted by ST herein.

Resale of ST products with provisions different from the information set forth herein shall void any warranty granted by ST for such product.

ST and the ST logo are trademarks of ST. For additional information about ST trademarks, please refer to www.st.com/trademarks. All other product or service names are the property of their respective owners.

Information in this document supersedes and replaces information previously supplied in any prior versions of this document.

© 2022 STMicroelectronics – All rights reserved