TDA7560A

4 x 45 W quad bridge car radio amplifier

Feature

- Superior output power capability:
  - 4 x 50 W/4 Ω max.
  - 4 x 45 W/4 Ω EIAJ
  - 4 x 30 W/4 Ω @ 14.4 V, 1 kHz, 10 %
  - 4 x 80 W/2 Ω max.
  - 4 x 77 W/2 Ω EIAJ
  - 4 x 55 W/2 Ω @ 14.4 V, 1 kHz, 10 %
- Multipower BCD technology
- MOSFET output power stage
- Excellent 2 Ω driving capability
- Hi-fi class distortion
- Low output noise
- Standby function
- Mute function
- Automute at min. supply voltage detection
- Low external component count:
  - Internally fixed gain (26 dB)
  - No external compensation
  - No bootstrap capacitors
- On board 0.35 A high side driver

Protections

- Output short circuit to GND, to V_S, across the load
- Very inductive loads

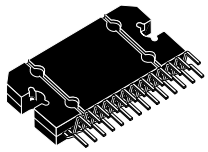

Flexiwatt27 (vertical)

- Overrating chip temperature with soft thermal limiter
- Output DC offset detection
- Load dump voltage
- Fortuitous open GND
- Reversed battery
- ESD

Description

The TDA7560A is a breakthrough BCD (Bipolar / CMOS / DMOS) technology class AB audio power amplifier in Flexiwatt 27 package designed for high power car radio.

The fully complementary P-Channel/N-Channel output structure allows a rail to rail output voltage swing which, combined with high output current and minimized saturation losses sets new power references in the car-radio field, with unparalleled distortion performances.

Table 1. Device summary

Order code	Package	Packing
E-TDA7560A	Flexiwatt27 (vertical)	Tube

Contents

1 **Block and pin connection diagrams 5**

2 **Electrical specifications 6**

2.1 Absolute maximum ratings 6

2.2 Thermal data 6

2.3 Electrical characteristics 6

2.4 Standard test and application circuit 8

2.5 Electrical characteristics curves 9

3 **Application hints 12**

3.1 SVR 12

3.2 Input stage 12

3.3 Standby and muting 12

3.4 DC offset detector 12

3.5 Heatsink definition 12

4 **Package information 13**

5 **Revision history 14**

List of tables

Table 1. Device summary 1
Table 2. Absolute maximum ratings 6
Table 3. Thermal data 6
Table 4. Electrical characteristics 6
Table 5. Document revision history 14

List of figure

Figure 1. Block diagram . . . 5
Figure 2. Pin connection (top view) . . . 5
Figure 3. Standard test and application circuit . . . 8
Figure 4. Quiescent current vs. supply voltage . . . 9
Figure 5. Output power vs. supply voltage (R_L = 4Ω) . . . 9
Figure 6. Output power vs. supply voltage (R_L = 2Ω) . . . 9
Figure 7. Distortion vs. output power (R_L = 4Ω) . . . 9
Figure 8. Distortion vs. output power (R_L = 2Ω) . . . 9
Figure 9. Distortion vs. frequency (R_L = 4Ω) . . . 9
Figure 10. Distortion vs. frequency (R_L = 2Ω) . . . 10
Figure 11. Crosstalk vs. frequency . . . 10
Figure 12. Supply voltage rejection vs. frequency . . . 10
Figure 13. Output attenuation vs. supply voltage . . . 10
Figure 14. Output noise vs. source resistance . . . 10
Figure 15. Power dissipation and efficiency vs. output power (sine-wave operation) . . . 10
Figure 16. Power dissipation vs. output power (music/speech simulation); R_L = 4 x 4Ω . . . 11
Figure 17. Power dissipation vs. output power (music/speech simulation); R_L = 4 x 2Ω . . . 11
Figure 18. ITU R-ARM frequency response, weighting filter for transient pop . . . 11
Figure 19. Flexiwatt27 (vertical) mechanical data and package dimensions . . . 13

1 Block and pin connection diagrams

Figure 1. Block diagram

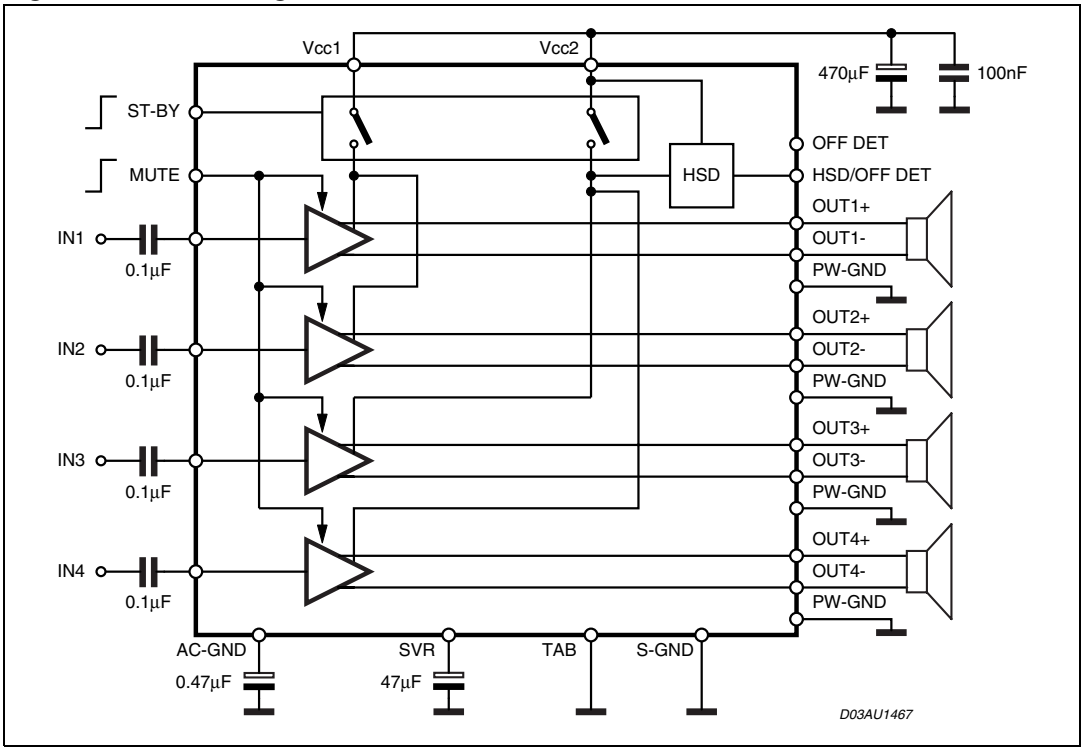

Figure 2. Pin connection (top view)

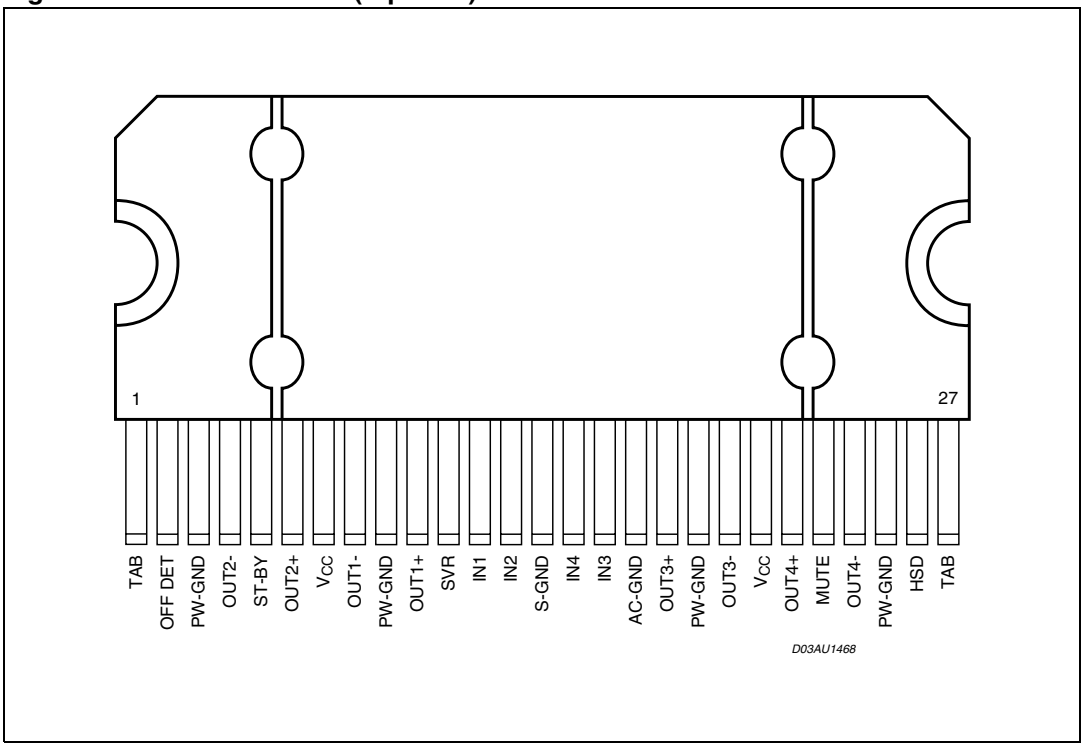

2 Electrical specifications

2.1 Absolute maximum ratings

Table 2. Absolute maximum ratings

Symbol	Parameter	Value	Unit
V_{CC}	Operating supply voltage	18	V
$V_{CC\ (DC)}$	DC supply voltage	28	V
$V_{CC\ (pk)}$	Peak supply voltage (for t = 50 ms)	50	V
I_O	Output peak current Repetitive (duty cycle 10 % at f = 10 Hz) Non repetitive (t = 100 µs)	 9 10	 A A
P_{tot}	Power dissipation T_{case} = 70 °C	85	W
T_j	Junction temperature	150	°C
T_{stg}	Storage temperature	-55 to 150	°C

2.2 Thermal data

Table 3. Thermal data

Symbol	Parameter	Value	Unit
$R_{th\ j\text{-}case}$	Thermal resistance junction to case Max.	1	°C/W

2.3 Electrical characteristics

Table 4. Electrical characteristics

(Refer to the test and application diagram, V_S = 13.2 V; R_L = 4 Ω; R_g = 600 Ω; f = 1 kHz; T_{amb} = 25 °C; unless otherwise specified).

Symbol	Parameter	Test condition	Min.	Typ.	Max.	Unit
I_{q1}	Quiescent current	$R_L = \infty$	80	200	320	mA
V_{OS}	Output offset voltage	Play Mode			±50	mV
dV_{OS}	During mute ON/OFF output offset voltage				±60	mV
G_v	Voltage gain		25	26	27	dB
dG_v	Channel gain unbalance				±1	dB
P_o	Output power	V_S = 13.2 V; THD = 10 % V_S = 13.2 V; THD = 1 % V_S = 14.4 V; THD = 10 % V_S = 14.4 V; THD = 1 %	23 16 28 20	25 19 30 23		W

Table 4. Electrical characteristics (continued)

(Refer to the test and application diagram, V_S = 13.2 V; R_L = 4 Ω; R_g = 600 Ω; f = 1 kHz; T_{amb} = 25 °C; unless otherwise specified).

Symbol	Parameter	Test condition	Min.	Typ.	Max.	Unit
P_o	Output power	V_S = 13.2 V; THD = 10 %, 2 Ω V_S = 13.2 V; THD = 1 %, 2 Ω V_S = 14.4 V; THD = 10 %, 2 Ω V_S = 14.4 V; THD = 1 %, 2 Ω	42 32 50 40	45 34 55 43		W
$P_{o\ EIAJ}$	EIAJ output power(1)	V_S = 13.7 V; R_L = 4 Ω V_S = 13.7 V; R_L = 2 Ω	41	45 77		W
$P_{o\ max.}$	Max. output power(1)	V_S = 14.4 V; R_L = 4 Ω V_S = 14.4 V; R_L = 2 Ω	43 75	50 80		W
THD	Distortion	P_o = 4 W P_o = 15 W; R_L = 2 Ω		0.006 0.015	0.02 0.03	%
e_{No}	Output noise	"A" Weighted Bw = 20 Hz to 20 kHz		35 50	50 70	µV
SVR	Supply voltage rejection	f = 100 Hz; V_r = 1 Vrms	50	70		dB
f_{ch}	High cut-off frequency	P_O = 0.5 W	100	300		kHz
R_i	Input impedance		80	100	120	KΩ
C_T	Cross talk	f = 1 kHz P_O = 4 W f = 10 kHz P_O = 4 W	60 50	70 60	- -	dB
I_{SB}	Standby current consumption	V_{ST-BY} = 1.5V			20	µA
		V_{ST-BY} = 0 V			10	
I_{pin5}	ST-BY pin current	V_{ST-BY} = 1.5 V to 3.5 V			±10	µA
$V_{SB\ out}$	Standby out threshold voltage	(Amp: ON)	3.5			V
$V_{SB\ in}$	Standby in threshold voltage	(Amp: OFF)			1.5	V
A_M	Mute attenuation	P_{Oref} = 4W	80	90		dB
$V_{M\ out}$	Mute out threshold voltage	(Amp: Play)	3.5			V
$V_{M\ in}$	Mute in threshold voltage	(Amp: Mute)			1.5	V
$V_{AM\ in}$	VS automute threshold	(Amp: Mute) Att ≥ 80 dB; P_{Oref} = 4 W (Amp: Play) Att < 0.1 dB; P_O = 0.5 W	6.5	7 7.5	 8	V
I_{pin23}	Muting pin current	V_{MUTE} = 1.5 V (Sourced current)	7	12	18	µA
		V_{MUTE} = 3.5 V	-5		18	µA
HSD section						
$V_{M\ MAX}$	Mute voltage for HSD operation				6	V
$V_{dropout}$	Dropout voltage	I_O = 0.35 A; V_S = 9 to 16 V		0.25	0.6	V
I_{prot}	Current limits		400		800	mA

Table 4. Electrical characteristics (continued)

(Refer to the test and application diagram, V_S = 13.2 V; R_L = 4 Ω; R_g = 600 Ω; f = 1 kHz; T_{amb} = 25 °C; unless otherwise specified).

Symbol	Parameter	Test condition	Min.	Typ.	Max.	Unit
Offset detector (Pin 26)						
V_{M_ON}	Mute voltage for DC offset detection enabled	V_{ST-BY} = 5 V	8			V
V_{M_OFF}					6	V
V_{OFF}	Detected differential output offset	V_{ST-BY} = 5 V; V_{mute} = 8 V	±2	±3	±4	V
V_{26_T}	Pin 26 voltage for detection = True	V_{ST-BY} = 5 V; V_{mute} = 8 V V_{OFF} > ±4 V	0		1.5	V
V_{26_F}	Pin 26 voltage for detection = False	V_{ST-BY} = 5 V; V_{mute} = 8 V V_{OFF} > ±2 V	12			V

1. Saturated square wave output.

2.4 Standard test and application circuit

Figure 3. Standard test and application circuit

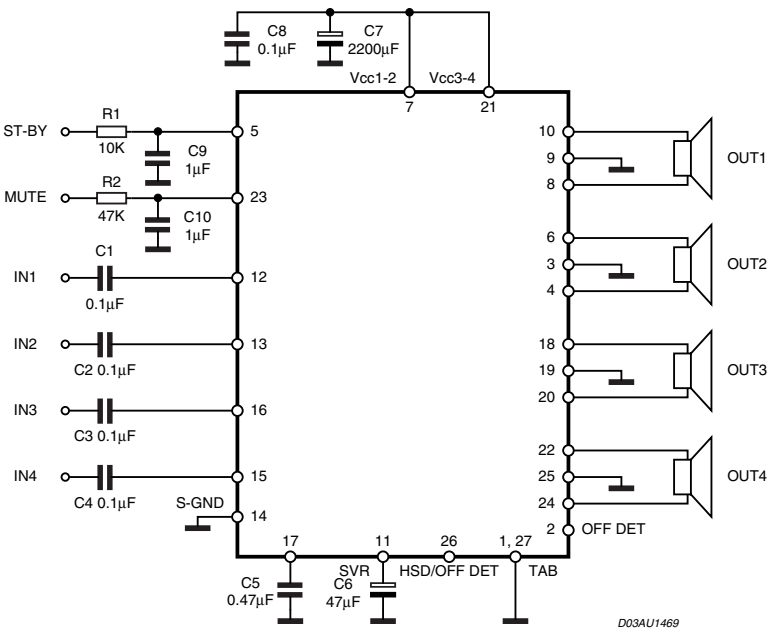

2.5 Electrical characteristics curves

Figure 4. Quiescent current vs. supply voltage

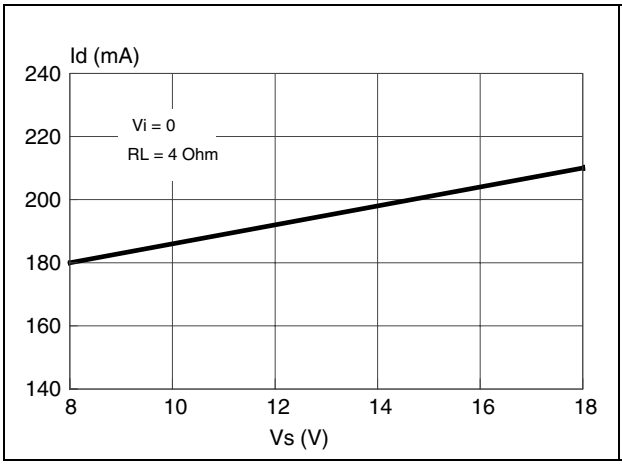

Figure 5. Output power vs. supply voltage (R_L = 4Ω)

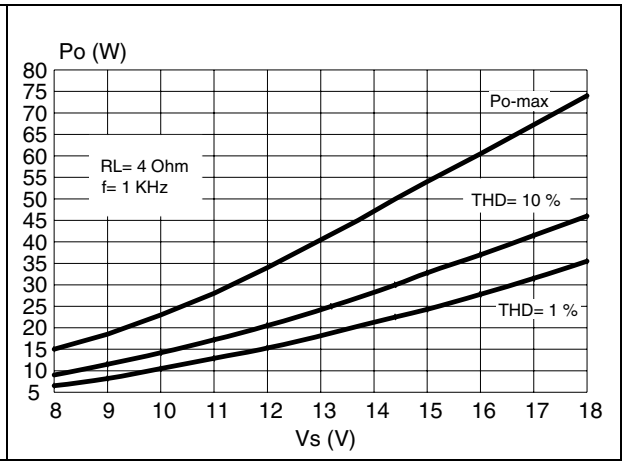

Figure 6. Output power vs. supply voltage (R_L = 2Ω)

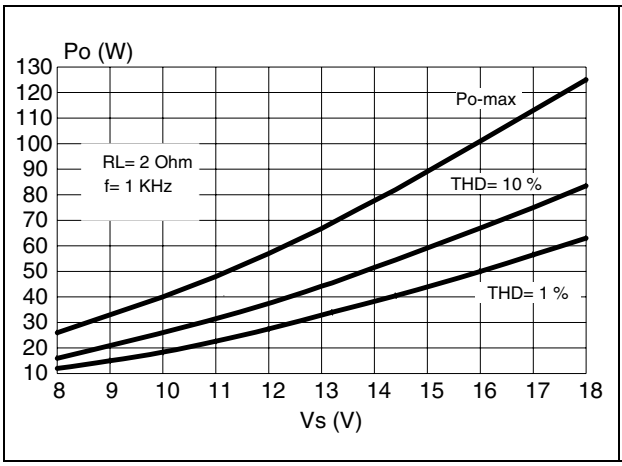

Figure 7. Distortion vs. output power (R_L = 4Ω)

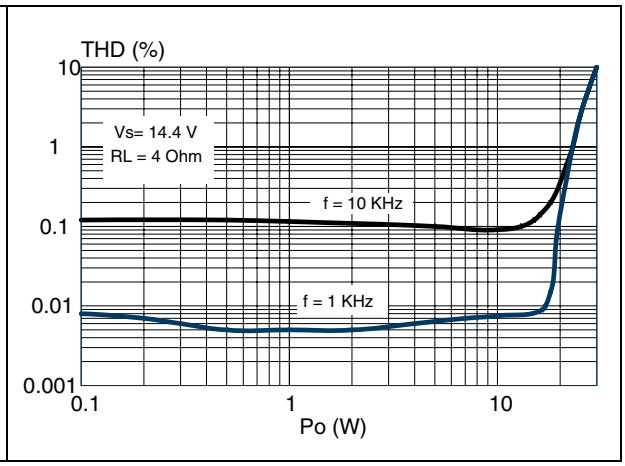

Figure 8. Distortion vs. output power (R_L = 2Ω)

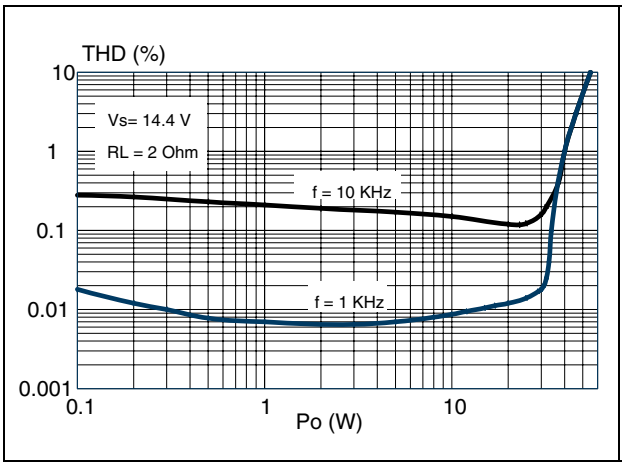

Figure 9. Distortion vs. frequency (R_L = 4Ω)

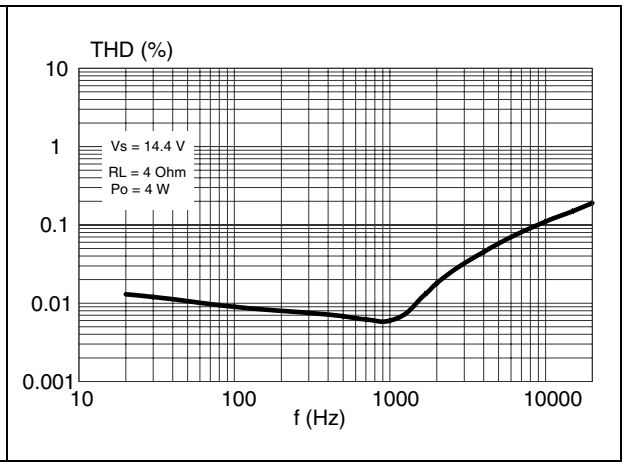

Figure 10. Distortion vs. frequency (R_L = 2Ω)

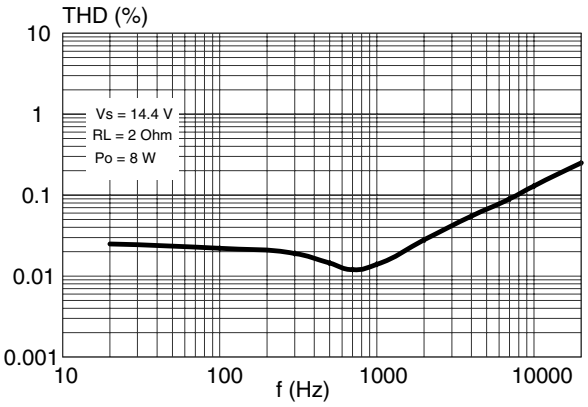

Figure 11. Crosstalk vs. frequency

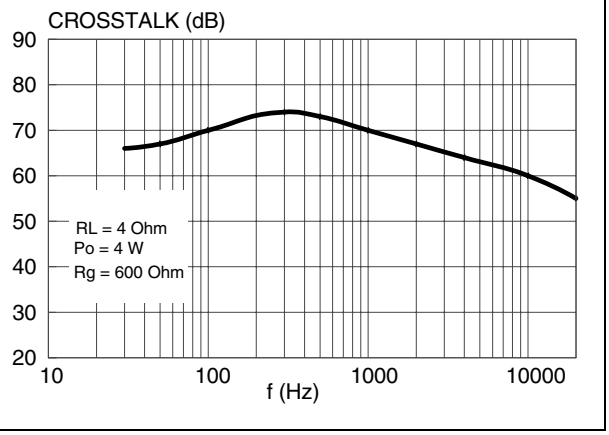

Figure 12. Supply voltage rejection vs. frequency

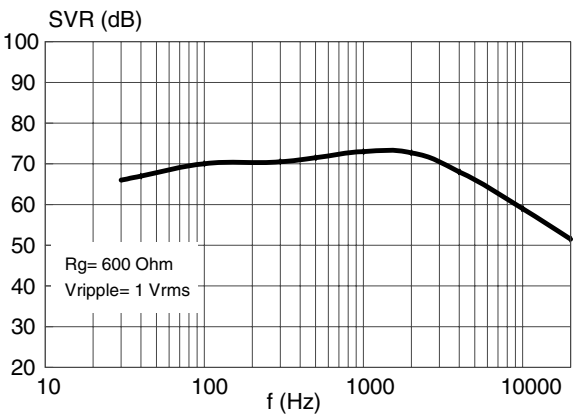

Figure 13. Output attenuation vs. supply voltage

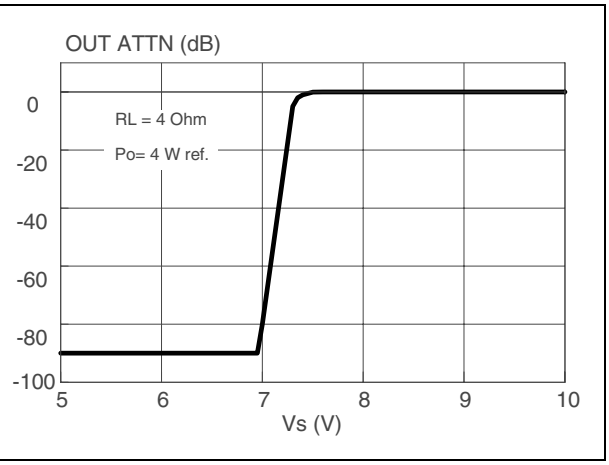

Figure 14. Output noise vs. source resistance

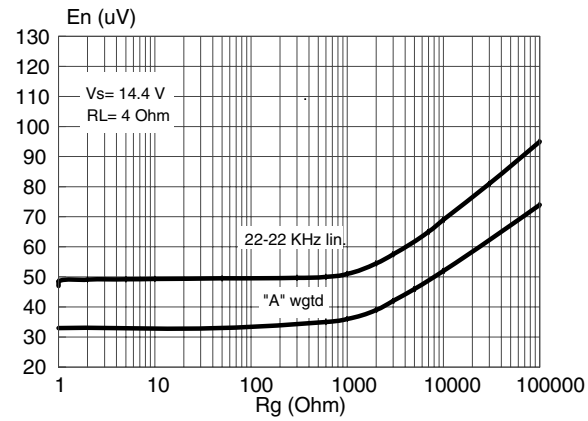

Figure 15. Power dissipation and efficiency vs. output power (sine-wave operation)

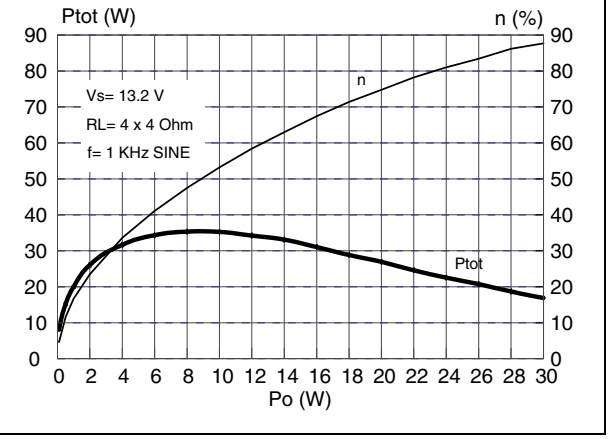

Figure 16. Power dissipation vs. output power (music/speech simulation); R_L = 4 x 4Ω

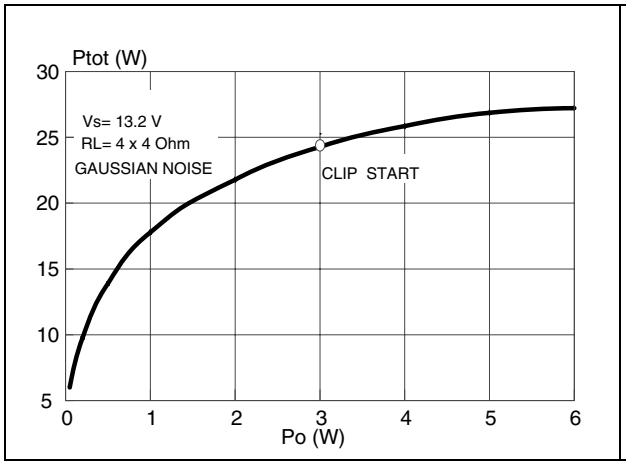

Figure 17. Power dissipation vs. output power (music/speech simulation); R_L = 4 x 2Ω

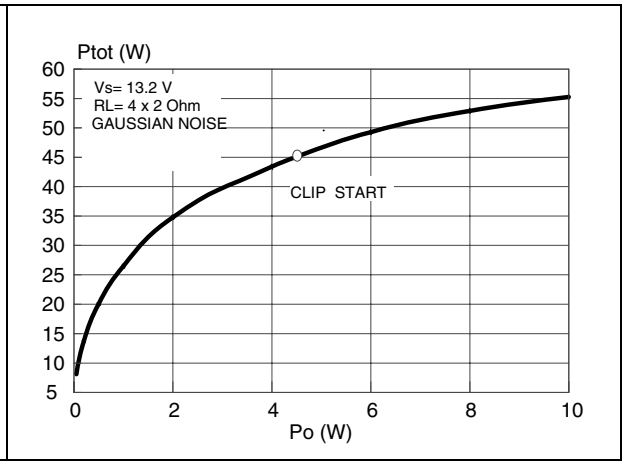

Figure 18. ITU R-ARM frequency response, weighting filter for transient pop

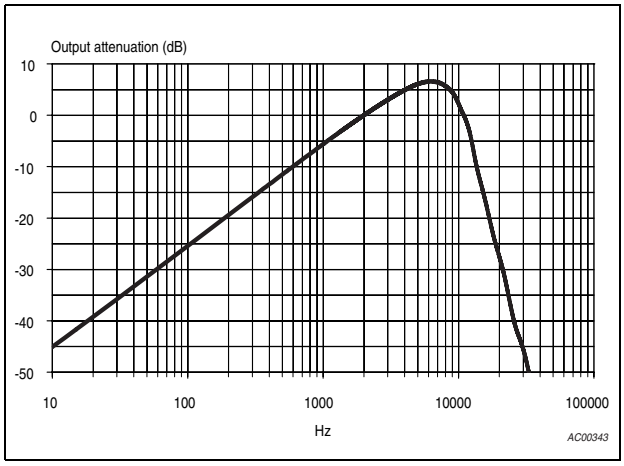

3 Application hints

(ref. to the circuit of *Figure 3*)

3.1 SVR

Besides its contribution to the ripple rejection, the SVR capacitor governs the turn ON/OFF time sequence and, consequently, plays an essential role in the pop optimization during ON/OFF transients.To conveniently serve both needs, **ITS MINIMUM RECOMMENDED VALUE IS 10 µF**.

3.2 Input stage

The TDA7560A's inputs are ground-compatible and can stand very high input signals (±8 Vpk) without any performances degradation.
If the standard value for the input capacitors (0.1µF) is adopted, the low frequency cut-off will amount to 16 Hz.

3.3 Standby and muting

Standby and Muting facilities are both CMOS-compatible. In absence of true CMOS ports or microprocessors, a direct connection to Vs of these two pins is admissible but a 470 kOhm equivalent resistance should be present between the power supply and the muting and ST-BY pins.
R-C cells have always to be used in order to smooth down the transitions for preventing any audible transient noises.
About the standby, the time constant to be assigned in order to obtain a virtually pop-free transition has to be slower than 2.5 V/ms.

3.4 DC offset detector

The TDA7560A integrates a DC offset detector to avoid that an anomalous DC offset on the inputs of the amplifier may be multiplied by the gain and result in a dangerous large offset on the outputs which may lead to speakers damage for overheating. The feature is enabled by the MUTE pin (according to *Table 4*) and works with the amplifier unmuted and with no signal on the inputs.
The DC offset detection can be available at 2 different pins:

- Pin 2 (always enabled)
- Pin 26. Only enabled if Vmute (pin23) is set higher than 8V. If not (Vmute < 6 V) pin 26 will revert to the original HSD function

3.5 Heatsink definition

Under normal usage (4 Ohm speakers) the heatsink's thermal requirements have to be deduced from *Figure 16*, which reports the simulated power dissipation when real music/speech programmes are played out. Noise with gaussian-distributed amplitude was employed for this simulation. Based on that, frequent clipping occurrence (worst-case) will cause P_{diss} = 26 W. Assuming T_{amb} = 70 °C and T_{CHIP} = 150 °C as boundary conditions, the heatsink's thermal resistance should be approximately 2 °C/W. This would avoid any thermal shutdown occurrence even after long-term and full-volume operation

4 Package information

In order to meet environmental requirements, ST (also) offers these devices in ECOPACK® packages. ECOPACK® packages are lead-free. The category of second Level Interconnect is marked on the package and on the inner box label, in compliance with JEDEC Standard JESD97. The maximum ratings related to soldering conditions are also marked on the inner box label.

ECOPACK is an ST trademark. ECOPACK specifications are available at: www.st.com.

Figure 19. Flexiwatt27 (vertical) mechanical data and package dimensions

DIM.	mm			inch		
	MIN.	TYP.	MAX.	MIN.	TYP.	MAX.
A	4.45	4.50	4.65	0.175	0.177	0.183
B	1.80	1.90	2.00	0.070	0.074	0.079
C		1.40			0.055	
D	0.75	0.90	1.05	0.029	0.035	0.041
E	0.37	0.39	0.42	0.014	0.015	0.016
F (1)			0.57			0.022
G	0.80	1.00	1.20	0.031	0.040	0.047
G1	25.75	26.00	26.25	1.014	1.023	1.033
H (2)	28.90	29.23	29.30	1.139	1.150	1.153
H1		17.00			0.669	
H2		12.80			0.503	
H3		0.80			0.031	
L (2)	22.07	22.47	22.87	0.869	0.884	0.904
L1	18.57	18.97	19.37	0.731	0.747	0.762
L2 (2)	15.50	15.70	15.90	0.610	0.618	0.626
L3	7.70	7.85	7.95	0.303	0.309	0.313
L4		5			0.197	
L5		3.5			0.138	
M	3.70	4.00	4.30	0.145	0.157	0.169
M1	3.60	4.00	4.40	0.142	0.157	0.173
N		2.20			0.086	
O		2			0.079	
R		1.70			0.067	
R1		0.5			0.02	
R2		0.3			0.12	
R3		1.25			0.049	
R4		0.50			0.019	
V	5° (Typ.)					
V1	3° (Typ.)					
V2	20° (Typ.)					
V3	45° (Typ.)					

(1): dam-bar protusion not included
(2): molding protusion included

OUTLINE AND MECHANICAL DATA

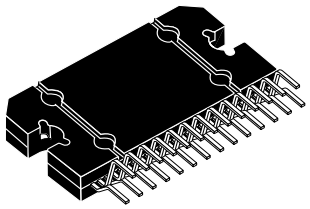

Flexiwatt27 (vertical)

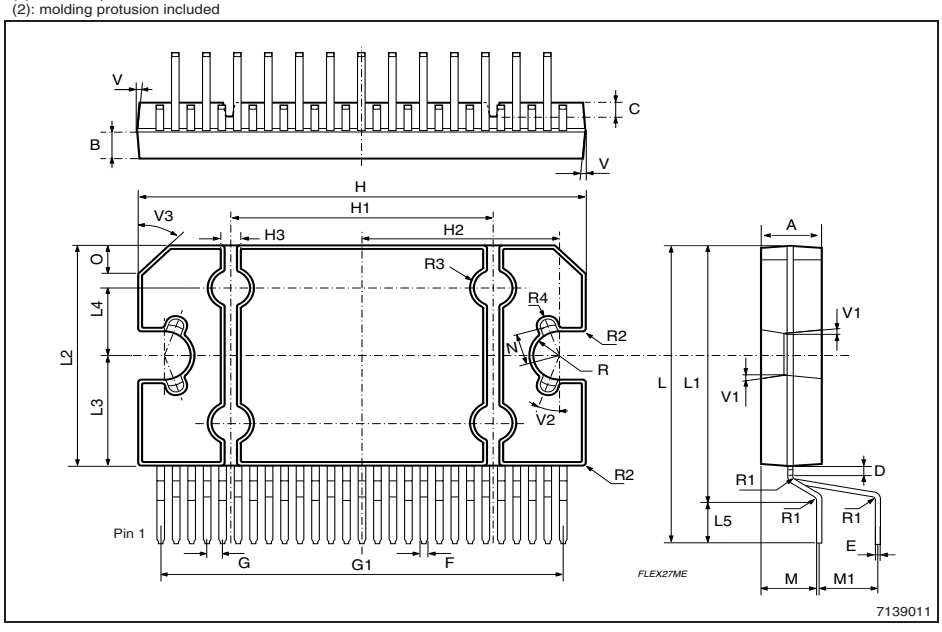

5 Revision history

Table 5. Document revision history

Date	Revision	Changes
16-Mar-2003	1	Initial release.
29-Sep-2008	2	Document reformatted. Changed the order code, see *Table 1: Device summary*. Updated *Table 4: Electrical characteristics*. Added *Figure 18: ITU R-ARM frequency response, weighting filter for transient pop*.
07-Nov-2008	3	Modified max. values of the V_{OS} and THD parameter in *Table 4: Electrical characteristics*.

Please Read Carefully:

Information in this document is provided solely in connection with ST products. STMicroelectronics NV and its subsidiaries (“ST”) reserve the right to make changes, corrections, modifications or improvements, to this document, and the products and services described herein at any time, without notice.

All ST products are sold pursuant to ST’s terms and conditions of sale.

Purchasers are solely responsible for the choice, selection and use of the ST products and services described herein, and ST assumes no liability whatsoever relating to the choice, selection or use of the ST products and services described herein.

No license, express or implied, by estoppel or otherwise, to any intellectual property rights is granted under this document. If any part of this document refers to any third party products or services it shall not be deemed a license grant by ST for the use of such third party products or services, or any intellectual property contained therein or considered as a warranty covering the use in any manner whatsoever of such third party products or services or any intellectual property contained therein.

UNLESS OTHERWISE SET FORTH IN ST’S TERMS AND CONDITIONS OF SALE ST DISCLAIMS ANY EXPRESS OR IMPLIED WARRANTY WITH RESPECT TO THE USE AND/OR SALE OF ST PRODUCTS INCLUDING WITHOUT LIMITATION IMPLIED WARRANTIES OF MERCHANTABILITY, FITNESS FOR A PARTICULAR PURPOSE (AND THEIR EQUIVALENTS UNDER THE LAWS OF ANY JURISDICTION), OR INFRINGEMENT OF ANY PATENT, COPYRIGHT OR OTHER INTELLECTUAL PROPERTY RIGHT.

UNLESS EXPRESSLY APPROVED IN WRITING BY AN AUTHORIZE REPRESENTATIVE OF ST, ST PRODUCTS ARE NOT DESIGNED, AUTHORIZED OR WARRANTED FOR USE IN MILITARY, AIR CRAFT, SPACE, LIFE SAVING, OR LIFE SUSTAINING APPLICATIONS, NOR IN PRODUCTS OR SYSTEMS, WHERE FAILURE OR MALFUNCTION MAY RESULT IN PERSONAL INJURY, DEATH, OR SEVERE PROPERTY OR ENVIRONMENTAL DAMAGE.

Resale of ST products with provisions different from the statements and/or technical features set forth in this document shall immediately void any warranty granted by ST for the ST product or service described herein and shall not create or extend in any manner whatsoever, any liability of ST.

ST and the ST logo are trademarks or registered trademarks of ST in various countries.

Information in this document supersedes and replaces all information previously supplied.

The ST logo is a registered trademark of STMicroelectronics. All other names are the property of their respective owners.

© 2008 STMicroelectronics - All rights reserved

STMicroelectronics group of companies

Australia - Belgium - Brazil - Canada - China - Czech Republic - Finland - France - Germany - Hong Kong - India - Israel - Italy - Japan - Malaysia - Malta - Morocco - Singapore - Spain - Sweden - Switzerland - United Kingdom - United States of America

www.st.com