TDA7519

Multichip module for car radio applications

Features

- High-performance signal processor for car radio applications
- Adjustment-free stereo decoder
- FM noise blanker
- Programmable multipath detector
- 2 Stereo and 2 mono inputs with mixing capability
- Bass, treble and loudness controls
- 4 Independent speaker outputs
- High-performance fully digital RDS demodulator
- On-chip adjustment-free 57kHz 8th order bandpass filter
- ARI (SK indication) and RDS signal quality output
- Full I^2C-bus control

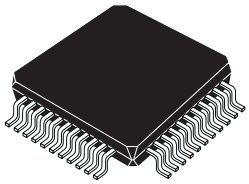

LQFP44

Two devices are included: TDA7460N, and TDA7479. (please refer to the relevant datasheet for specifications)

TDA7460N is a digitally controlled stereo decoder and audioprocessor, featuring FM noise blanking and multipath detector; bass, treble, loudness controls with 2 stereo and 2 mono mixable inputs and four independent speaker outputs.

TDA7479 is a fully digital RDS data decoder with an on-chip adjustment-free bandpass filter.

Both chips are I^2C bus controlled.

Description

The TDA7519 multichip module combines in a single compact (10x10mm) 44-pin package, the signal processing functionalities of a state-of-the-art car radio, with a minimized number of required external components.

Order codes

Part numbers	Package	Packing
TDA7519	LQFP44 (10x 10x 1.4mm)	Tray
TDA7519TR	LQFP44 (10x 10x 1.4mm)	Tape and reel

1 PIN description

Figure 1. PIN connections

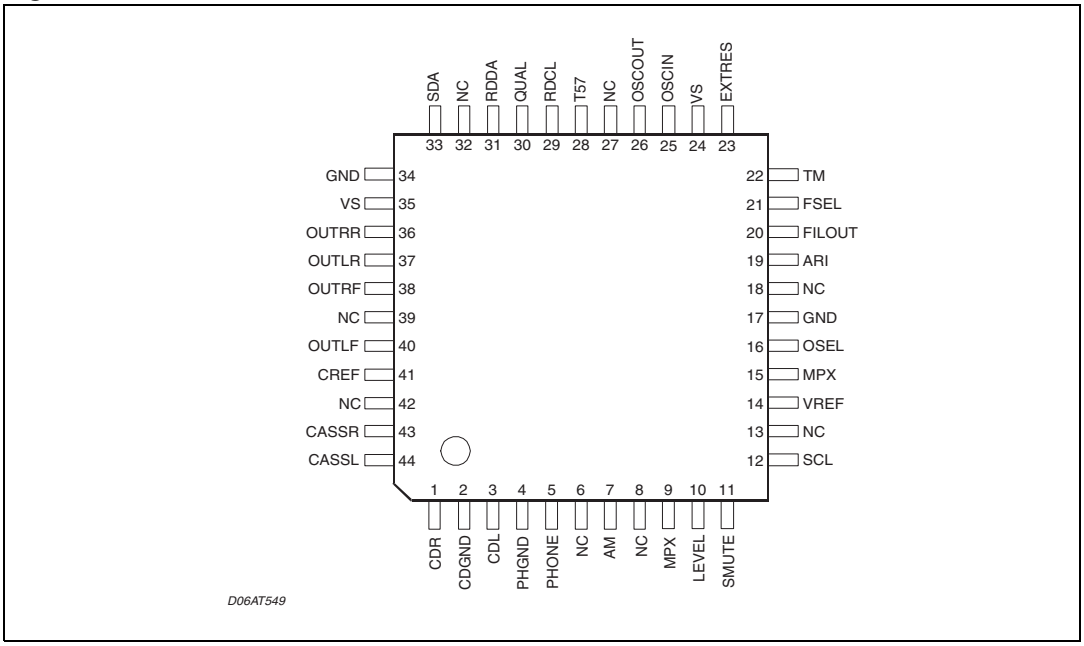

Table 1. PIN description

TDA7519	Audioprocessor	RDS Decoder	Name	Function
	TDA7460N	TDA7479		
1	3		CDR	CD right channel input
2	4		CDGND	Ground reference CD
3	5		CDL	CD left channel input
4	6		PHGND	Phone ground (MPOUT selectable by SW)
5	7		PHONE	Phone input (MPIN selectable by SW)
6				Not connected
7	8		AM	AM input
8				Not connected
9	9		MPX	FM input (MPX)
10	10		LEVEL	Level input stereo decoder
11	11		SMUTE	Soft mute drive
12	12		SCL	I^2C clock line
13				Not connected
14		3	VREF	Reference voltage
15		4	MPX	RDS input signal
16		5	OSEL	Oscillator selector pin

Table 1. PIN description (continued)

TDA7519	Audioprocessor	RDS Decoder	Name	Function
	TDA7460N	TDA7479		
17		6	GND	Ground
18				Not connected
19		7	ARI	Output for ARI indication
20		8	FILOUT	Filter output
21		9	FSEL	Frequency selector
22		10	TM	Test mode ENABLE
23		11	EXTRES	Reset
24		12	VS	Supply voltage
25		13	OSCIN	Oscillator input
26		14	OSCOUT	Oscillator output
27				Not connected
28		15	T57	Test output: 57kHz clock
29		16	RDCL	RDS clock output 1187.5Hz
30		1	QUAL	Signal quality indication
31		2	RDDA	RDS data output
32				Not connected
33	13		SDA	I2C data line
34	14		GND	Supply ground
35	15		VS	Supply voltage
36	16		OUTRR	Right rear speaker output
37	17		OUTLR	Left rear speaker output
38	18		OUTRF	Right front speaker output
39				Not connected
40	19		OUTLF	Left front speaker output
41	20		CREF	Reference capacitor pin
42				Not connected
43	1		CASSR	Cassette input right
44	2		CASSL	Cassette input left

2 Electrical specifications

2.1 Thermal data

Table 2. Thermal data

Symbol	Parameter	Test condition	Min	Typ	Max	Units
R_{th}	Thermal resistance	Junction to ambient, soldered on multilayer PCB		40		°C/W
T_{amb}	Operating temperature range		-40		85	°C
T_{stg}	Storage temperature range		-55		150	°C

3 Package information

In order to meet environmental requirements, ST offers these devices in ECOPACK® packages. These packages have a lead-free second level interconnect. The category of second level interconnect is marked on the package and on the inner box label, in compliance with JEDEC standard JESD97. The maximum ratings related to soldering conditions are also marked on the inner box label.

ECOPACK is an ST trademark. ECOPACK specifications are available at: www.st.com.

Figure 2. LQFP44 (10x10) Mechanical data and package dimensions.

DIM.	mm			inch		
	MIN.	TYP.	MAX.	MIN.	TYP.	MAX.
A			1.60			0.063
A1	0.05		0.15	0.002		0.006
A2	1.35	1.40	1.45	0.053	0.055	0.057
B	0.30	0.37	0.45	0.012	0.015	0.018
C	0.09		0.20	0.004		0.008
D	11.80	12.00	12.20	0.464	0.472	0.480
D1	9.80	10.00	10.20	0.386	0.394	0.401
D3		8.00			0.315	
E	11.80	12.00	12.20	0.464	0.472	0.480
E1	9.80	10.00	10.20	0.386	0.394	0.401
E3		8.00			0.315	
e		0.80			0.031	
L	0.45	0.60	0.75	0.018	0.024	0.030
L1		1.00			0.039	
k	0°(min.), 3.5°(typ.), 7°(max.)					
ccc			0.10			0.0039

OUTLINE AND MECHANICAL DATA

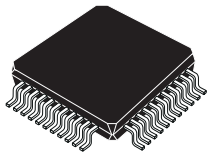

LQFP44 (10 x 10 x 1.4mm)

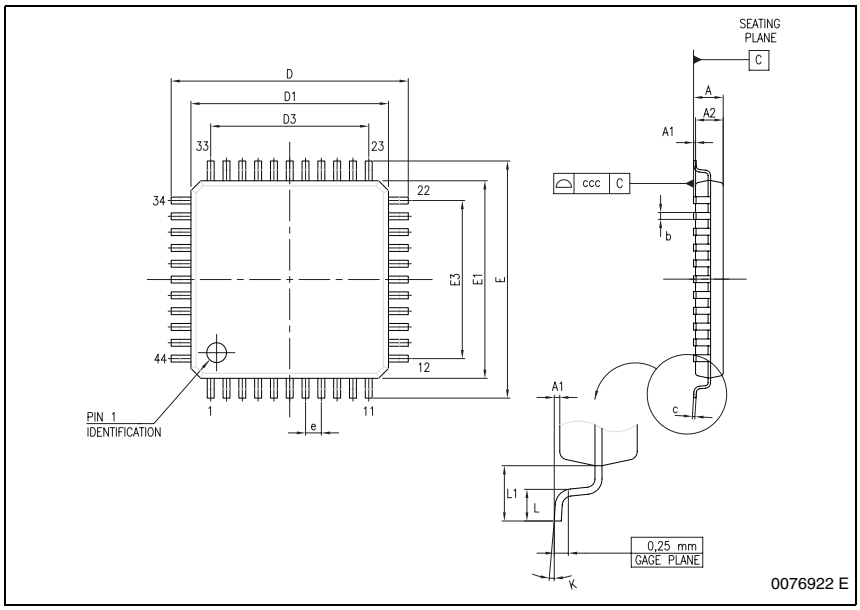

4 Revision history

Table 3. Document revision history

Date	Revision	Changes
01-Oct-2006	1	Initial release.
15-May-2006	2	Migrate from STPress.
27-Nov-2006	3	Addition of PIN diagram, Package changed, layout changes, modify text.

Please Read Carefully:

Information in this document is provided solely in connection with ST products. STMicroelectronics NV and its subsidiaries (“ST”) reserve the right to make changes, corrections, modifications or improvements, to this document, and the products and services described herein at any time, without notice.

All ST products are sold pursuant to ST’s terms and conditions of sale.

Purchasers are solely responsible for the choice, selection and use of the ST products and services described herein, and ST assumes no liability whatsoever relating to the choice, selection or use of the ST products and services described herein.

No license, express or implied, by estoppel or otherwise, to any intellectual property rights is granted under this document. If any part of this document refers to any third party products or services it shall not be deemed a license grant by ST for the use of such third party products or services, or any intellectual property contained therein or considered as a warranty covering the use in any manner whatsoever of such third party products or services or any intellectual property contained therein.

UNLESS OTHERWISE SET FORTH IN ST’S TERMS AND CONDITIONS OF SALE ST DISCLAIMS ANY EXPRESS OR IMPLIED WARRANTY WITH RESPECT TO THE USE AND/OR SALE OF ST PRODUCTS INCLUDING WITHOUT LIMITATION IMPLIED WARRANTIES OF MERCHANTABILITY, FITNESS FOR A PARTICULAR PURPOSE (AND THEIR EQUIVALENTS UNDER THE LAWS OF ANY JURISDICTION), OR INFRINGEMENT OF ANY PATENT, COPYRIGHT OR OTHER INTELLECTUAL PROPERTY RIGHT.

UNLESS EXPRESSLY APPROVED IN WRITING BY AN AUTHORIZED ST REPRESENTATIVE, ST PRODUCTS ARE NOT RECOMMENDED, AUTHORIZED OR WARRANTED FOR USE IN MILITARY, AIR CRAFT, SPACE, LIFE SAVING, OR LIFE SUSTAINING APPLICATIONS, NOR IN PRODUCTS OR SYSTEMS WHERE FAILURE OR MALFUNCTION MAY RESULT IN PERSONAL INJURY, DEATH, OR SEVERE PROPERTY OR ENVIRONMENTAL DAMAGE. ST PRODUCTS WHICH ARE NOT SPECIFIED AS "AUTOMOTIVE GRADE" MAY ONLY BE USED IN AUTOMOTIVE APPLICATIONS AT USER’S OWN RISK.

Resale of ST products with provisions different from the statements and/or technical features set forth in this document shall immediately void any warranty granted by ST for the ST product or service described herein and shall not create or extend in any manner whatsoever, any liability of ST.

ST and the ST logo are trademarks or registered trademarks of ST in various countries.

Information in this document supersedes and replaces all information previously supplied.

The ST logo is a registered trademark of STMicroelectronics. All other names are the property of their respective owners.

© 2006 STMicroelectronics - All rights reserved

STMicroelectronics group of companies

Australia - Belgium - Brazil - Canada - China - Czech Republic - Finland - France - Germany - Hong Kong - India - Israel - Italy - Japan - Malaysia - Malta - Morocco - Singapore - Spain - Sweden - Switzerland - United Kingdom - United States of America

www.st.com