TDA7498E

Datasheet

160-watt + 160-watt dual BTL class-D audio amplifier

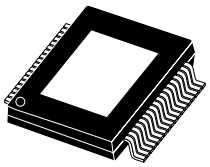

PowerSSO-36
exposed pad up

Features

- 160-W + 160-W output power at THD = 10% with R_L = 4 Ω and V_{CC} = 36 V
- 1 x 220 W output power mono parallel BTL at THD = 10% with R_L = 3 Ω and V_{CC} = 36 V
- Wide-range single-supply operation (14 - 36 V)
- High efficiency (η = 85%)
- Parallel BTL function using the MODE pin
- Four selectable, fixed gain settings of nominally 23.8 dB, 29.8 dB, 33.3 dB and 35.8 dB
- Differential inputs minimize common-mode noise
- Standby and mute features
- Smart protection
- Thermal overload protection
- Small offset less than 20 mV

Description

The TDA7498E is a dual BTL class-D audio amplifier with a single power supply designed for home systems and active speaker applications.

It comes in a 36-pin PowerSSO package with exposed pad up (EPU) to facilitate mounting a separate heatsink.

Maturity status link
TDA7498E

Device summary	
Order code	TDA7498ETR
Operating temperature range	0 to 70 °C
Package	PowerSSO36 (EPU)
Packing	Tape and reel

1 Device block diagram

The figure below shows the block diagram of one of the two identical channels of the TDA7498E.

Figure 1. Internal block diagram (showing one channel only)

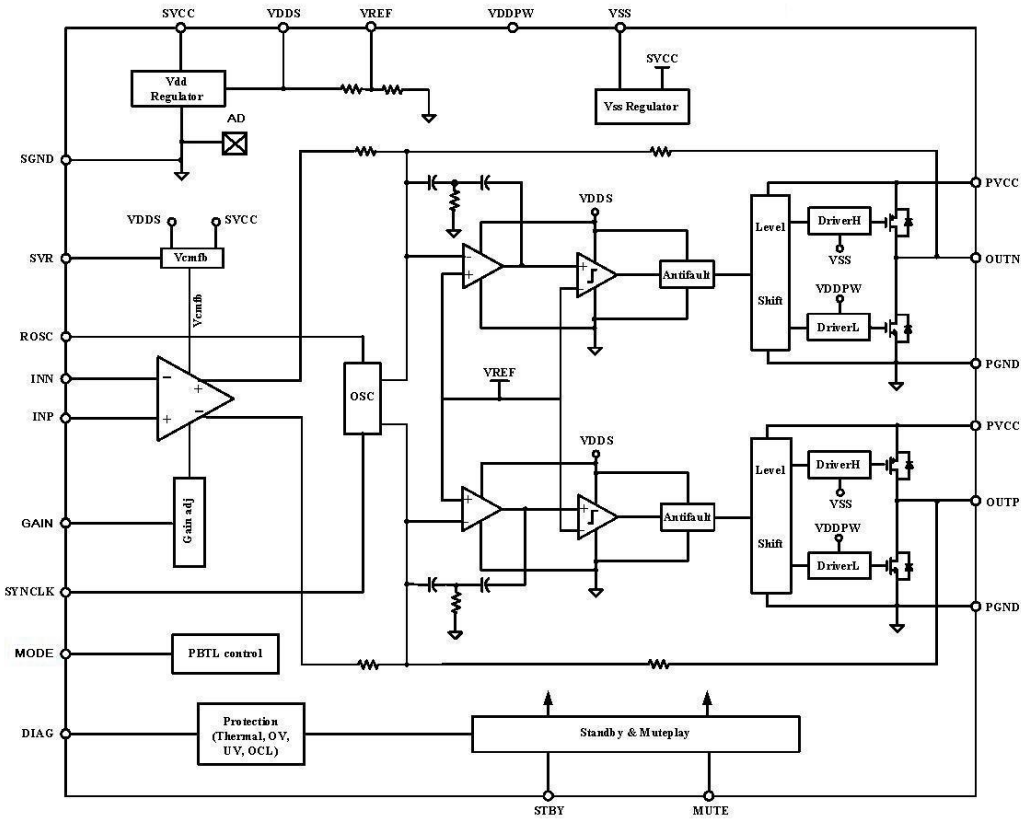

2 Pin description

2.1 Pinout

Figure 2. **Pin connections (top view, PCB view)**

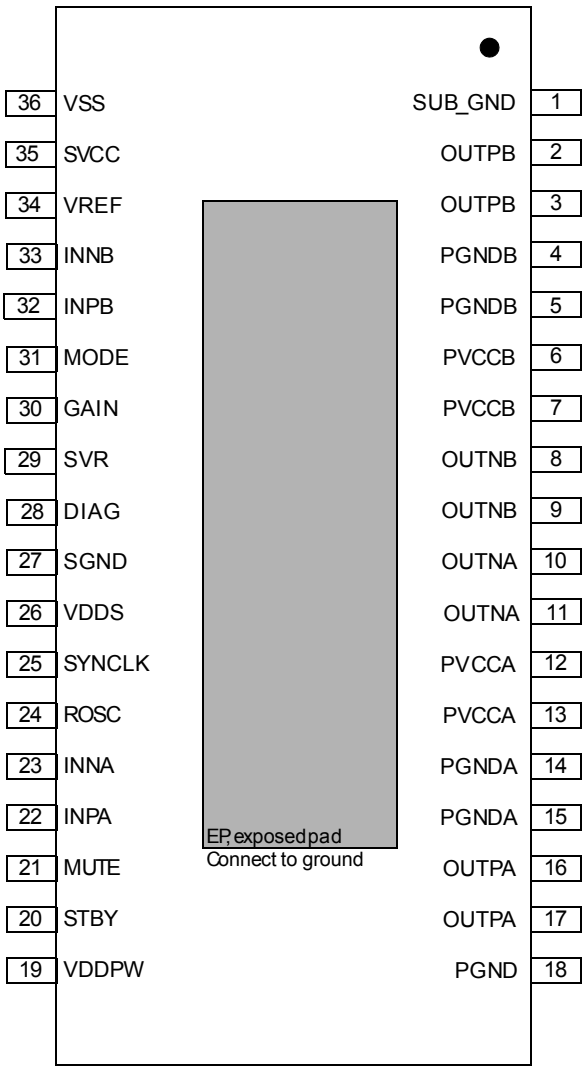

2.2 Pin list

Table 1. **Pin description list**

Number	Name	Type	Description
1	SUB_GND	PWR	Connect to the frame
2,3	OUTPB	O	Positive PWM for right channel
4,5	PGNDB	PWR	Power stage ground for right channel
6,7	PVCCB	PWR	Power supply for right channel
8,9	OUTNB	O	Negative PWM output for right channel
10,11	OUTNA	O	Negative PWM output for left channel
12,13	PVCCA	PWR	Power supply for left channel
14,15	PGNDA	PWR	Power stage ground for left channel
16,17	OUTPA	O	Positive PWM output for left channel
18	PGND	PWR	Power stage ground
19	VDDPW	O	3.3-V (nominal) regulator output referred to ground for power stage
20	STBY	I	Standby mode control
21	MUTE	I	Mute mode control
22	INPA	I	Positive differential input of left channel
23	INNA	I	Negative differential input of left channel
24	ROSC	O	Master oscillator frequency-setting pin
25	SYNCLK	I/O	Clock in/out for external oscillator
26	VDDS	O	3.3-V (nominal) regulator output referred to ground for signal blocks
27	SGND	PWR	Signal ground
28	DIAG	O	Open-drain diagnostic output
29	SVR	O	Supply voltage rejection
30	GAIN	I	Gain setting input
31	MODE	I	Enables stereo or mono BTL mode of operation
32	INPB	I	Positive differential input of right channel
33	INNB	I	Negative differential input of right channel
34	VREF	O	Half VDDS (nominal) referred to ground
35	SVCC	PWR	Signal power supply
36	VSS	O	3.3-V (nominal) regulator output referred to power supply
-	EP	-	Exposed pad for heatsink, to be connected to ground

3 Electrical specifications

3.1 Absolute maximum ratings

Table 2. Absolute maximum ratings

Symbol	Parameter	Value	Unit
V_{CC}	DC supply voltage for pins PVCCA, PVCCB, SVCC	45	V
VI	Voltage limits for input pins STBY, MUTE, INNA, INPA, INNB, INPB, GAIN, MODE	-0.3 to 4.0	V
T_j	Operating junction temperature	0 to 150	°C
Top	Operating ambient temperature	0 to 70	°C
T_{stg}	Storage temperature	-40 to 150	°C

3.2 Thermal data

Table 3. Thermal data

Symbol	Parameter	Min.	Typ.	Max.	Unit
$R_{th\ j\text{-}case}$	Thermal resistance, junction to case	-	3.0		°C/W

3.3 Recommended operating conditions

Table 4. Recommended operating conditions

Symbol	Parameter	Min	Typ	Max	Unit
V_{CC}	Supply voltage for pins PVCCA, PVCCB, SVCC	14	-	39	V
Tamb	Ambient operating temperature	0	-	70	°C

3.4 Electrical specifications

Unless otherwise stated, the values in the table below are specified for the conditions: V_{CC} = 36 V, R_L = 4 Ω, R_{OSC} = R3 = 39 kΩ, C8 = 100 nF, f = 1 kHz, G_V = 23.6 dB Tamb = 25 °C.

Table 5. Electrical specifications

Symbol	Parameter	Condition	Min.	Typ.	Max.	Unit
I_q	Total quiescent current	No LC filter, no load	-	60		mA
I_{qSTBY}	Quiescent current in standby	-	-	1		µA
V_{OS}	Output offset voltage	Vi = 0, Av = 23.6 dB, no load	-20	-	20	mV
I_{OCP}	Overcurrent protection threshold	R_L = 0 Ω	10	11	14	A
T_j	Junction temperature at thermal shutdown	-	140	150	160	°C
R_i	Input resistance	Differential input		69	-	kΩ
V_{UVP}	Undervoltage protection threshold	-	-	-	8	V

Symbol	Parameter	Condition	Min.	Typ.	Max.	Unit
R_{dsON}	Power transistor on-resistance	High side	-	0.15	-	Ω
		Low side	-	0.15	-	
P_o	Output power	THD = 10%	-	160	-	W
		THD = 1%	-	125	-	
P_o	Parallel BTL (mono) output power, R_L = 3 ohm, Vcc = 36 V	THD = 10%	-	220	-	W
		THD = 1%	-	170	-	
η	Efficiency		-	85	-	%
THD	Total harmonic distortion	P_o = 1 W	-	0.05	-	%
G_V	Closed-loop gain	GAIN < 0.25*VDD		23.8		dB
		0.25*VDD < GAIN < 0.5*VDD		29.8		
		0.5*VDD < GAIN < 0.75*VDD		33.3		
		GAIN > 0.75*VDD		35.8		
ΔG_V	Gain matching	-	-1	-	1	dB
C_T	Crosstalk	f = 1 kHz, P_o = 1 W	50	60	-	dB
Vn	Total output noise	Inputs shorted and to ground, A Curve		231		μV
		Inputs shorted and to ground, f = 20 Hz to 20 kHz		400		
SVRR	Supply voltage rejection ratio	fr = 100 Hz, Vr = 0.5 Vpp, C_{SVR} = 10 μF	-	55	-	dB
T_r, T_f	Rise and fall times	-	-	35	-	ns
f_{SW}	Switching frequency	Internal oscillator	240	310	400	kHz
f_{SWR}	Output switching frequency range	With internal oscillator by changing R_{OSC} (1)	240	-		kHz
V_{inH}	Digital input high (H)	-	2.0	-	-	V
V_{inL}	Digital input low (L)		-	-	0.8	
Function mode	Standby & mute & play	STBY < 0.5 V; MUTE = X	Standby			
		STBY > 2.5 V; MUTE < L	Mute			
		STBY > 2.5 V; MUTE > H	Play			
A_{MUTE}	Mute attenuation	V_{MUTE} < L, V_{STBY} = H	-	75	-	dB

1. *$f_{SW} = 10^6 / ((16 * R_{OSC} + 182) * 4)$ kHz, $f_{SYNCLK} = 2 * f_{SW}$ with R3 = 39 kΩ (see Figure 3. Test circuit stereo application and mono BTL mode).*

3.5 Test circuit

Figure 3. Test circuit stereo application and mono BTL mode

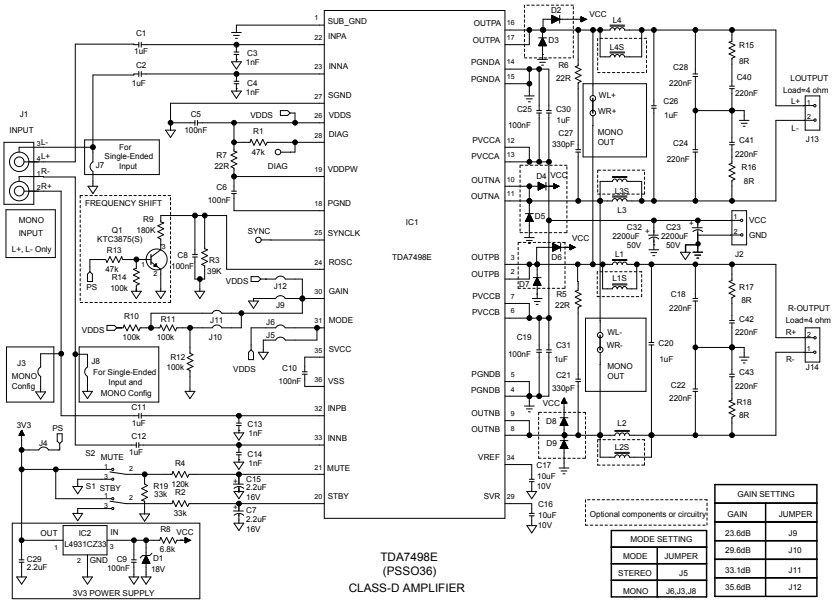

4 Characterization curves

Unless otherwise stated the measurements were made under the following conditions:
V_{CC} = 36 V, f = 1 kHz, G_V = 23.6 dB, R_{OSC} = 39 kΩ, C_{OSC} = 100 nF, Tamb = 25 °C

4.1 For R_L = 4 Ω, stereo configuration

Figure 4. Output power vs. supply voltage

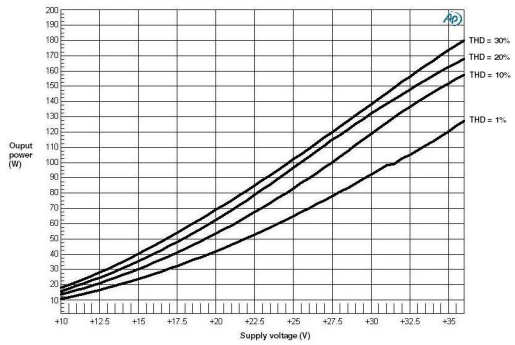

Figure 5. THD vs. output power

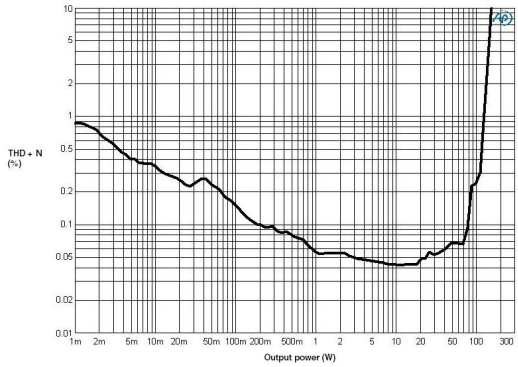

Figure 6. THD vs. frequency

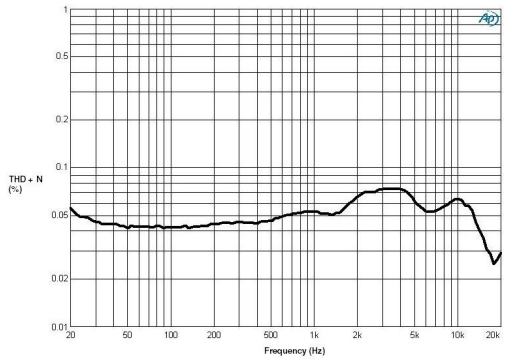

Figure 7. FFT performance

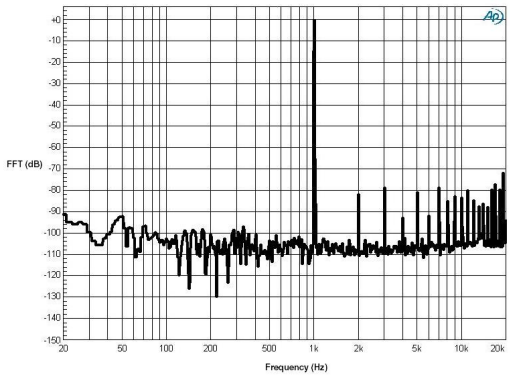

Figure 8. Crosstalk vs. frequency

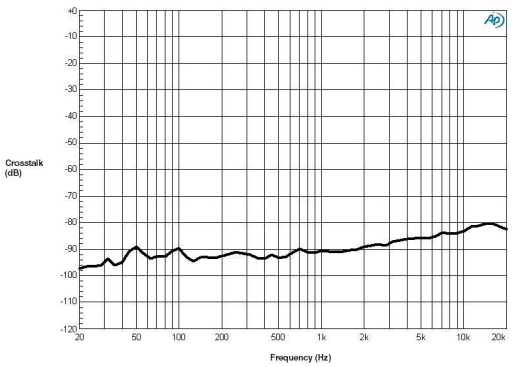

4.2 For R_L = 3 Ω, mono BTL configuration

Figure 9. Output power vs. supply voltage

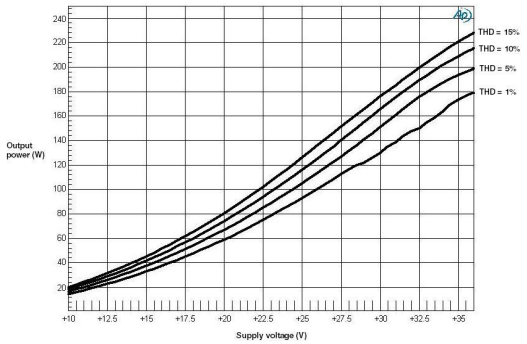

Figure 10. THD vs. output power

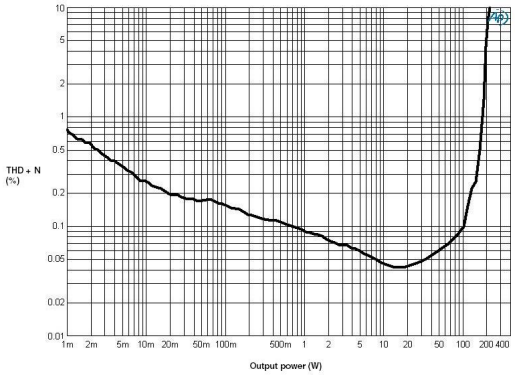

Figure 11. THD vs. frequency

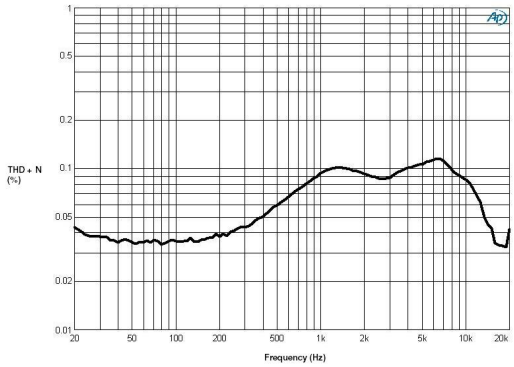

5 Application information

5.1 Stereo and mono BTL operation selection using the MODE pin

The TDA7498E can be used in stereo applications or mono BTL applications. Connecting the MODE pin to the VDDS pin configures the device in mono BTL. The output of the two channels can be paralleled. When the MODE pin is connected to ground or floating (pulled down internally) the device works as a stereo amplifier.

5.2 Gain setting

The gain of the TDA7498E is set by GAIN (pin 30).

Table 6. Gain settings

GAIN	Total gain	Application recommendation
VGAIN < 0.25*VDDS	23.6 dB	GAIN pin connected to SGND
0.25*VDDS < VGAIN < 0.5*VDDS	29.6 dB	Rc10 = Rc11 = Rc12 = 100 K max
0.5*VDDS < VGAIN < 0.75*VDDS	33.1 dB	Rc10 = Rc11 = Rc12 = 100 K max
VGAIN > 0.75VDDS	35.6 dB	GAIN pin connected to VDDS

5.3 Smart protection

The TDA7498E embeds an overcurrent protection circuitry to protect the device from unwanted current peaks. If the overcurrent protection threshold (Table 5. Electrical specifications) is exceeded, the power stage will be shut down immediately. The device will recover automatically once the fault is removed.

6 Package information

In order to meet environmental requirements, ST offers these devices in different grades of ECOPACK® packages, depending on their level of environmental compliance. ECOPACK® specifications, grade definitions and product status are available at: www.st.com. ECOPACK® is an ST trademark.

6.1 PowerSSO-36 EPU package information

The device comes in a 36-pin PowerSSO package with exposed pad up (EPU).

Figure 12. PowerSSO-36 EPU package outline shows the package outline and Table 7. PowerSSO-36 EPU package mechanical data gives the dimensions.

Figure 12. PowerSSO-36 EPU package outline

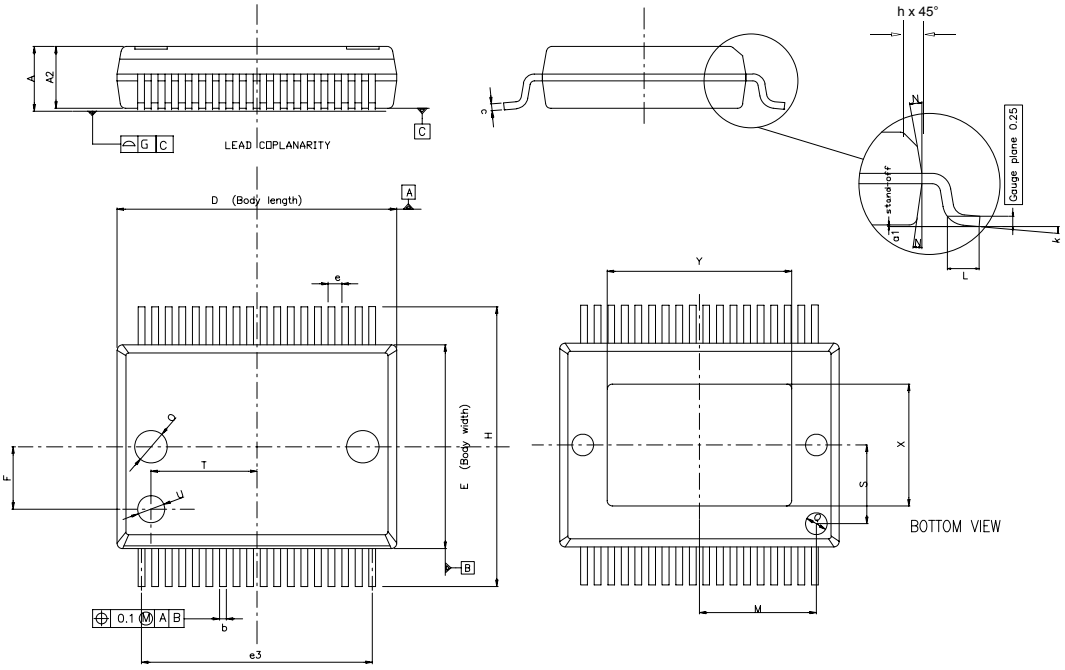

Table 7. **PowerSSO-36 EPU package mechanical data**

Symbol	Dimensions in mm			Dimensions in inches		
	Min.	Typ.	Max.	Min.	Typ.	Max.
A	2.15	-	2.45	0.085	-	0.096
A2	2.15	-	2.35	0.085	-	0.093
a1	0	-	0.10	0	-	0.004
b	0.18	-	0.36	0.007	-	0.014
c	0.23	-	0.32	0.009	-	0.013
D	10.10	-	10.50	0.398	-	0.413
E	7.40	-	7.60	0.291	-	0.299
e	-	0.5	-	-	0.020	-
e3	-	8.5	-	-	0.335	-
F	-	2.3	-	-	0.091	-
G	-	-	0.10	-	-	0.004
H	10.10	-	10.50	0.398	-	0.413
h	-	-	0.40	-	-	0.016
k	0	-	8 degrees	0	-	8 degrees
L	0.55	-	0.85	0.022	-	0.033
M	-	4.30	-	-	0.169	-
N	-	-	10 degrees	-	-	10 degrees
O	-	1.20	-	-	0.047	-
Q	-	0.80	-	-	0.031	-
S	-	2.90	-	-	0.114	-
T	-	3.65	-	-	0.144	-
U	-	1.00	-	-	0.039	-
X	4.10	-	4.70	0.161	-	0.185
Y	4.90	-	7.10	0.193	-	0.280

Revision history

Table 8. **Document revision history**

Date	Revision	Changes
12-Dec-2011	1	Initial release.
16-Jun-2015	2	Updated V_{CC} in Table 3: "Absolute maximum ratings" , updated Section 6.3: "Smart protection", and updated dimension L in Table 8: "PowerSSO-36 EPU package mechanical data".
10-Dec-2018	3	Updated device summary on the cover page.

Contents

1 **Device block diagram** 2
2 **Pin description** 3
2.1 Pinout 3
2.2 Pin list 4
3 **Electrical specifications** 5
3.1 Absolute maximum ratings 5
3.2 Thermal data 5
3.3 Recommended operating conditions 5
3.4 Electrical specifications 5
3.5 Test circuit 6
4 **Characterization curves** 8
4.1 For R_L = 4 Ω, stereo configuration 8
4.2 For R_L = 3 Ω, mono BTL configuration 8
5 **Application information** 10
5.1 Stereo and mono BTL operation selection using the MODE pin 10
5.2 Gain setting 10
5.3 Smart protection 10
6 **Package information** 11
6.1 PowerSSO-36 EPU package information 11
Revision history 13
Contents 14
List of tables 15
List of figures 16

List of tables

Table 1. Pin description list . . . 4
Table 2. Absolute maximum ratings . . . 5
Table 3. Thermal data . . . 5
Table 4. Recommended operating conditions . . . 5
Table 5. Electrical specifications . . . 5
Table 6. Gain settings . . . 10
Table 7. PowerSSO-36 EPU package mechanical data . . . 12
Table 8. Document revision history . . . 13

List of figures

Figure 1. Internal block diagram (showing one channel only) . . . 2
Figure 2. Pin connections (top view, PCB view) . . . 3
Figure 3. Test circuit stereo application and mono BTL mode . . . 7
Figure 4. Output power vs. supply voltage . . . 8
Figure 5. THD vs. output power . . . 8
Figure 6. THD vs. frequency . . . 8
Figure 7. FFT performance . . . 8
Figure 8. Crosstalk vs. frequency . . . 8
Figure 9. Output power vs. supply voltage . . . 9
Figure 10. THD vs. output power . . . 9
Figure 11. THD vs. frequency . . . 9
Figure 12. PowerSSO-36 EPU package outline . . . 11

IMPORTANT NOTICE – PLEASE READ CAREFULLY

STMicroelectronics NV and its subsidiaries (“ST”) reserve the right to make changes, corrections, enhancements, modifications, and improvements to ST products and/or to this document at any time without notice. Purchasers should obtain the latest relevant information on ST products before placing orders. ST products are sold pursuant to ST’s terms and conditions of sale in place at the time of order acknowledgement.

Purchasers are solely responsible for the choice, selection, and use of ST products and ST assumes no liability for application assistance or the design of Purchasers’ products.

No license, express or implied, to any intellectual property right is granted by ST herein.

Resale of ST products with provisions different from the information set forth herein shall void any warranty granted by ST for such product.

ST and the ST logo are trademarks of ST. All other product or service names are the property of their respective owners.

Information in this document supersedes and replaces information previously supplied in any prior versions of this document.

© 2018 STMicroelectronics – All rights reserved