TDA7268

2 x 2W STEREO AUDIO AMPLIFIER

- WIDE OPERATING RANGE FROM 4.5V TO 18V
- P_{OUT} = 2W @ THD 10% 12V/8Ω
- INTERNAL FIXED GAIN 32dB
- NO FEEDBACK CAPACITOR
- NO BOUCHEROT CELL
- THERMAL PROTECTION
- AC SHORT CIRCUIT PROTECTION
- SVR CAPACITOR FOR BETTER RIPPLE REJECTION
- LOW TURN-ON/OFF POP
- VERY FEW EXTERNAL COMPONENTS
- STAND-BY MODE (I_{ST-BY} < 300µA)

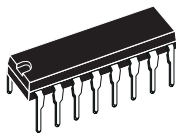

POWERDIP (8+8)

ORDERING NUMBER: TDA7268

DESCRIPTION

The device TDA7268 is a new technology stereo Audio Amplifier in DIP package specially designed for TV application.

Thanks to the fully complementary output configuration the device delivers a rail to rail voltage swing without need of boostrap capacitor.

BLOCK DIAGRAM

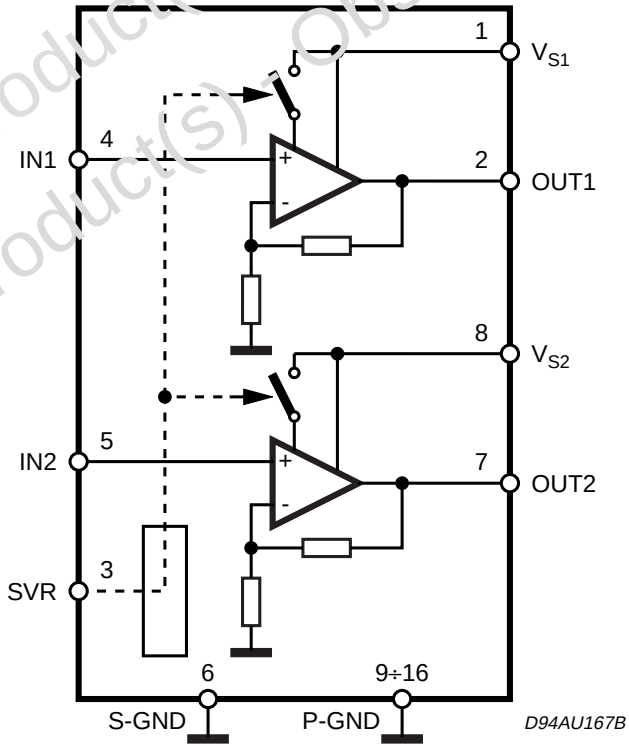

Obsolete Product(s) - Obsolete Product(s)

ABSOLUTE MAXIMUM RATINGS

Symbol	Parameter	Value	Unit
V_S	Operating Supply Voltage	18	V
I_O	Output Peak Current	1.5	A
T_{op}	Operating Temperature Range	0 to 70	°C
T_j	Junction Temperature	150	°C
T_{stg}	Storage Temperature Range	-40 to 125	°C

PIN CONNECTION

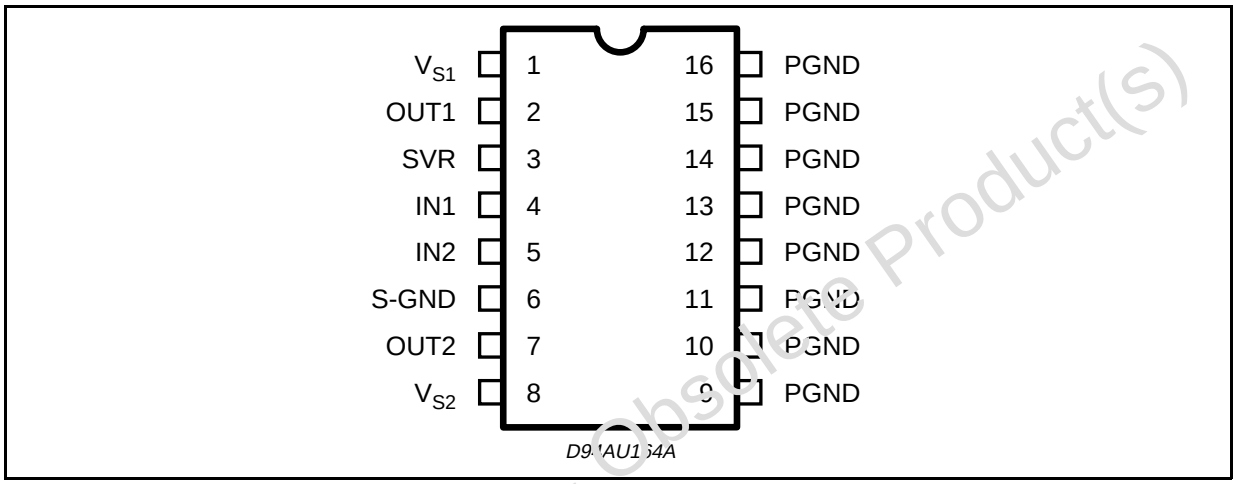

THERMAL DATA

Symbol	Parameter		Value	Unit
$R_{th\ j\text{-}amb}$	Thermal Resistance Junction to ambient (on PCB)	Max.	70	°C/W
$R_{th\ j\text{-}case}$	Thermal Resistance Junction to case	Max.	15	°C/W

Rth with "on Board" Square Heat Sink vs. Copper Area

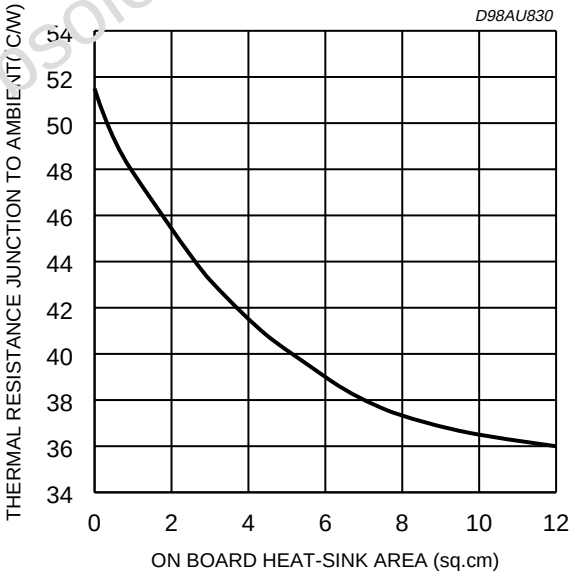

Example of heatsink using PC board copper

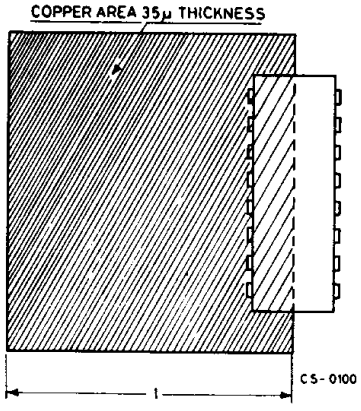

Obsolete Product(s) - Obsolete Product(s)

ELECTRICAL CHARACTERISTICS (T_{amb} = 25°C; V_S = 12V; R_L = 8Ω; f = 1KHz; unless otherwise specified.)

Symbol	Parameter	Test Condition	Min.	Typ.	Max.	Unit
V_S	Supply Voltage Range		4.5		18	V
I_S	Quiescent Current			40	60	mA
I_{sb}	Stand-By Current	Pin 3 shorted to GND		0.15	0.3	mA
V_O	Quiescent Output Voltage		5.5	6	6.5	V
A_V	Voltage Gain		31	32	33	dB
ΔA_V	Voltage Gain Matching				1.0	dB
R_{IN}	Input Impedance		50	100		KΩ
P_O	Output Power	THD = 10%	1.9	2		W
THD	Distortion	P_O = 1W		0.1	0.4	%
SVR	Supply Voltage Rejection	$V_{rip.}$ = 150mVrms; $F_{rip.}$ = 1KHz R_S = 10kΩ R_S = 50Ω	 40	 50 46		 dB dB
e_n	Total Input Noise Voltage	Rg = 10KΩ; BW = 20Hz to 20KHz		[illegible]	8	µV
CT	Cross Talk	P_O = 1W;	50	60		dB
V_{sb}	Stand-By Enable Voltage	I_{SB} < 300µA			1	V
A_{sb}	Stand-By Attenution		60	80		dB
P_O	Output Power	THD = 10%; V_S = 9V; R_L = 4Ω		1.8		W

Obsolete Product(s) - Obsolete Product(s)

Fig. 1: Standard Test and Application Circuit

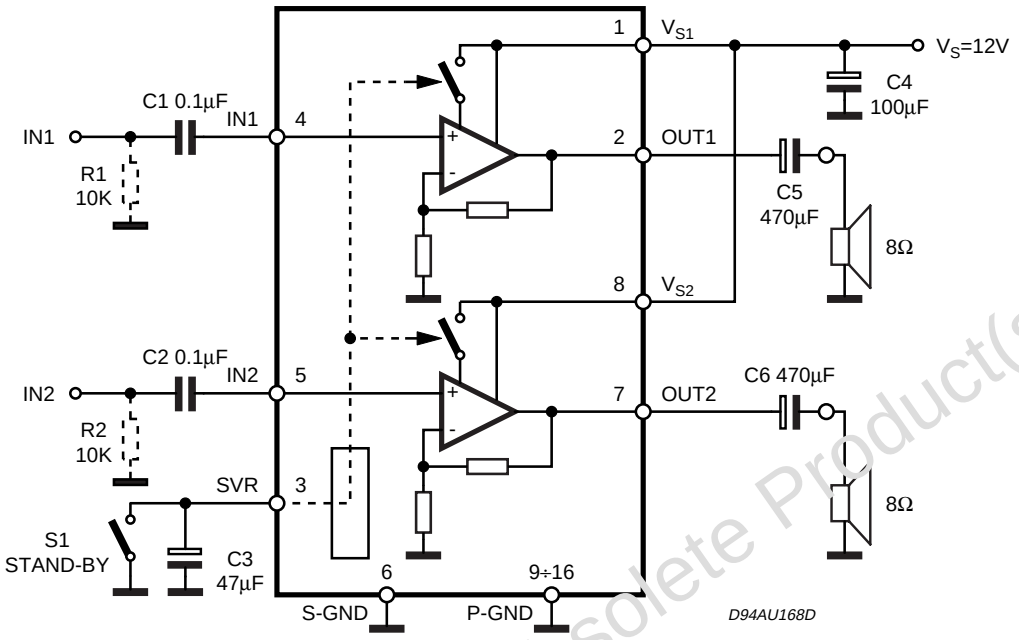

Note: Add R1 & R2 on demoboard only for DC tests

Fig. 2: PCB And Components Layout Of The Application Circuit of Figure 1

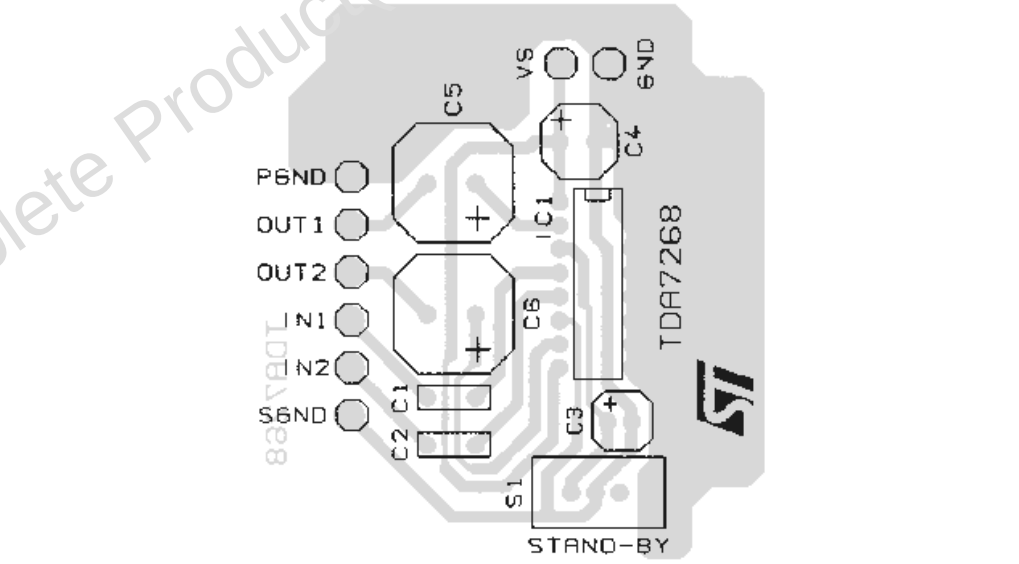

Obsolete Product(s) - Obsolete Product(s)

APPLICATION HINTS:

For 12V supply and 8Ω speaker application, its maximum power dissipation is about 2W.

Assumming that max ambient temperature is 70°C. Required thermal resistance of the device and heat dissipating means must be equal to (150 - 70)/2 = 40°C/W.

Junction to pin thermal resistance of the package is about 15°C/W.

That means external heat sink of about 25°C/W is required. Stand-By switches must be able to discharge C_{svr} current.

DIM.	mm			inch		
	MIN.	TYP.	MAX.	MIN.	TYP.	MAX.
a1	0.51			0.020		
B	0.85		1.40	0.033		0.055
b		0.50			0.020	
b1	0.38		0.50	0.015		0.020
D			20.0			0.787
E		8.80			0.346	
e		2.54			0.100	
e3		17.78			0.700	
F			7.10			0.280
I			5.10			0.201
L		3.30			0.130	
Z			1.27			0.050

OUTLINE AND MECHANICAL DATA

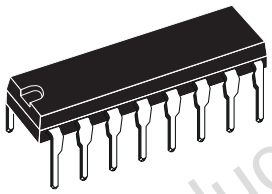

Powerdip 16

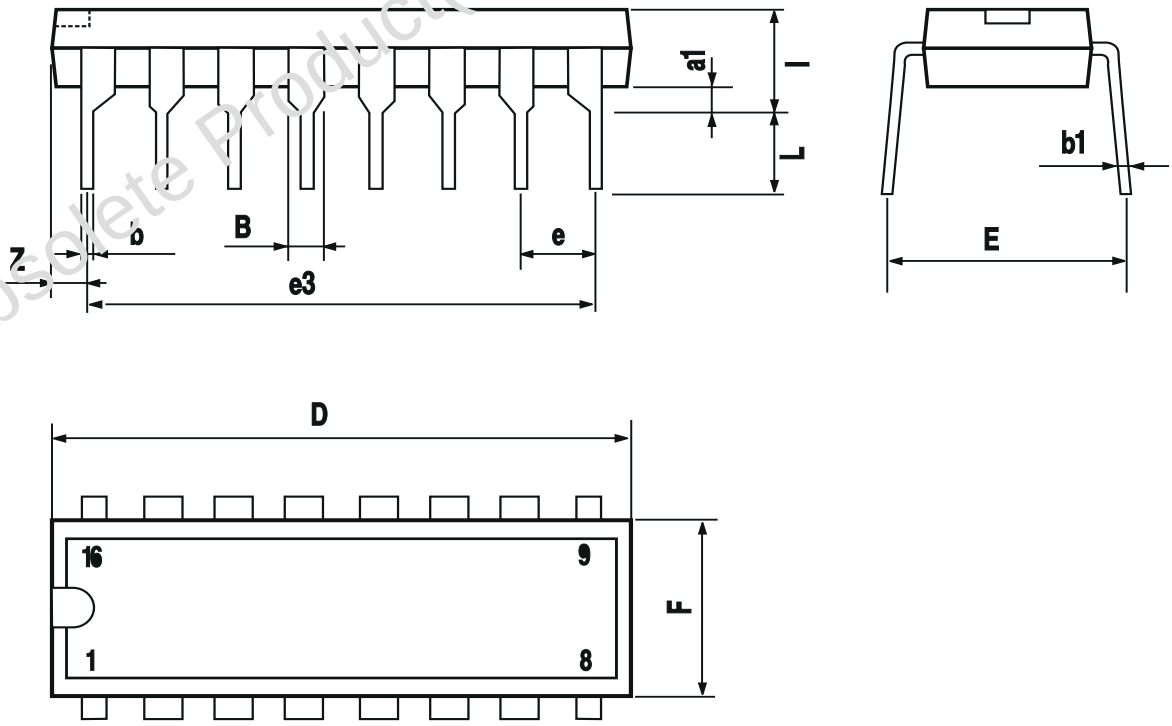

Obsolete Product(s) - Obsolete Product(s)

Obsolete Product(s) - Obsolete Product(s)

Information furnished is believed to be accurate and reliable. However, STMicroelectronics assumes no responsibility for the consequences of use of such information nor for any infringement of patents or other rights of third parties which may result from its use. No license is granted by implication or otherwise under any patent or patent rights of STMicroelectronics. Specifications mentioned in this publication are subject to change without notice. This publication supersedes and replaces all information previously supplied. STMicroelectronics products are not authorized for use as critical components in life support devices or systems without express written approval of STMicroelectronics.

The ST logo is a registered trademark of STMicroelectronics.
All other names are the property of their respective owners

© 2003 STMicroelectronics - All rights reserved

STMicroelectronics GROUP OF COMPANIES
Australia – Belgium - Brazil - Canada - China – Czech Republic - Finland - France - Germany - Hong Kong - India - Israel - Italy - Japan - Malaysia - Malta - Morocco - Singapore - Spain - Sweden - Switzerland - United Kingdom - United States
www.st.com