DATA SHEET

TDA5736; TDA5737
5 V VHF, hyperband and UHF mixers/oscillators for TV and VCR 3-band tuners

Product specification
Supersedes data of 1996 Oct 25
File under Integrated Circuits, IC02

1997 Feb 24

Philips Semiconductors

PHILIPS

5 V VHF, hyperband and UHF mixers/oscillators for TV and VCR 3-band tuners

TDA5736; TDA5737

FEATURES

- Balanced mixer with a common emitter input for band A (single input)
- 2-pin oscillator for band A
- Balanced mixer with a common base input for bands B and C (balanced input)
- 3-pin oscillator for band B
- 4-pin oscillator for band C
- Local oscillator buffer output for external prescaler
- SAW filter preamplifier with a low output impedance to drive the SAW filter directly
- Band gap voltage stabilizer for oscillator stability
- Electronic band switch
- External IF filter between the mixer output and the IF amplifier input.

GENERAL DESCRIPTION

The TDA5736 and TDA5737 are monolithic integrated circuits that perform the mixer/oscillator functions for bands A, B and C in TV and VCR tuners. These low power mixer/oscillators require a power supply of 5 V and are available in a very small package.

These devices give the designer the capability to design an economical and physically small 3-band tuner.

They are suitable for European standards, as illustrated in Fig.17, with the following RF bands: 48.25 to 168.25 MHz, 175.25 to 447.25 MHz and 455.25 to 855.25 MHz. With an appropriate tuned circuit, they are also suitable for NTSC all channel tuners (USA and Japan).

The tuner development time can be drastically reduced by using these devices.

APPLICATIONS

- 3-band all channel TV and VCR tuners
- Any standard.

QUICK REFERENCE DATA

SYMBOL	PARAMETER	CONDITIONS	MIN.	TYP.	MAX.	UNIT
V_P	supply voltage		–	5.0	–	V
I_P	supply current		–	50	–	mA
f_{RF}	frequency range	RF input; band A; note 1	41	–	171	MHz
		RF input; band B; note 1	166	–	451	MHz
		RF input; band C; note 1	446	–	861	MHz
G_v	voltage gain	band A	–	23	–	dB
		band B	–	34	–	dB
		band C	–	34	–	dB
NF	noise figure	band A	–	7.5	–	dB
		band B	–	8	–	dB
		band C	–	9	–	dB
V_o	output voltage level causing 1% cross modulation in channel	band A	–	116	–	dBμV
		band B	–	115	–	dBμV
		band C	–	115	–	dBμV

Note

1. The limits are related to the tank circuits used in Fig.17 and the intermediate frequency. Frequency bands may be adjusted by the choice of external components.

ORDERING INFORMATION

TYPE NUMBER	PACKAGE		
	NAME	DESCRIPTION	VERSION
TDA5736T	SO24	plastic small outline package; 24 leads; body width 7.5 mm	SOT137-1
TDA5736M	SSOP24	plastic shrink small outline package; 24 leads; body width 5.3 mm	SOT340-1
TDA5737M	SSOP24	plastic shrink small outline package; 24 leads; body width 5.3 mm	SOT340-1

BLOCK DIAGRAM

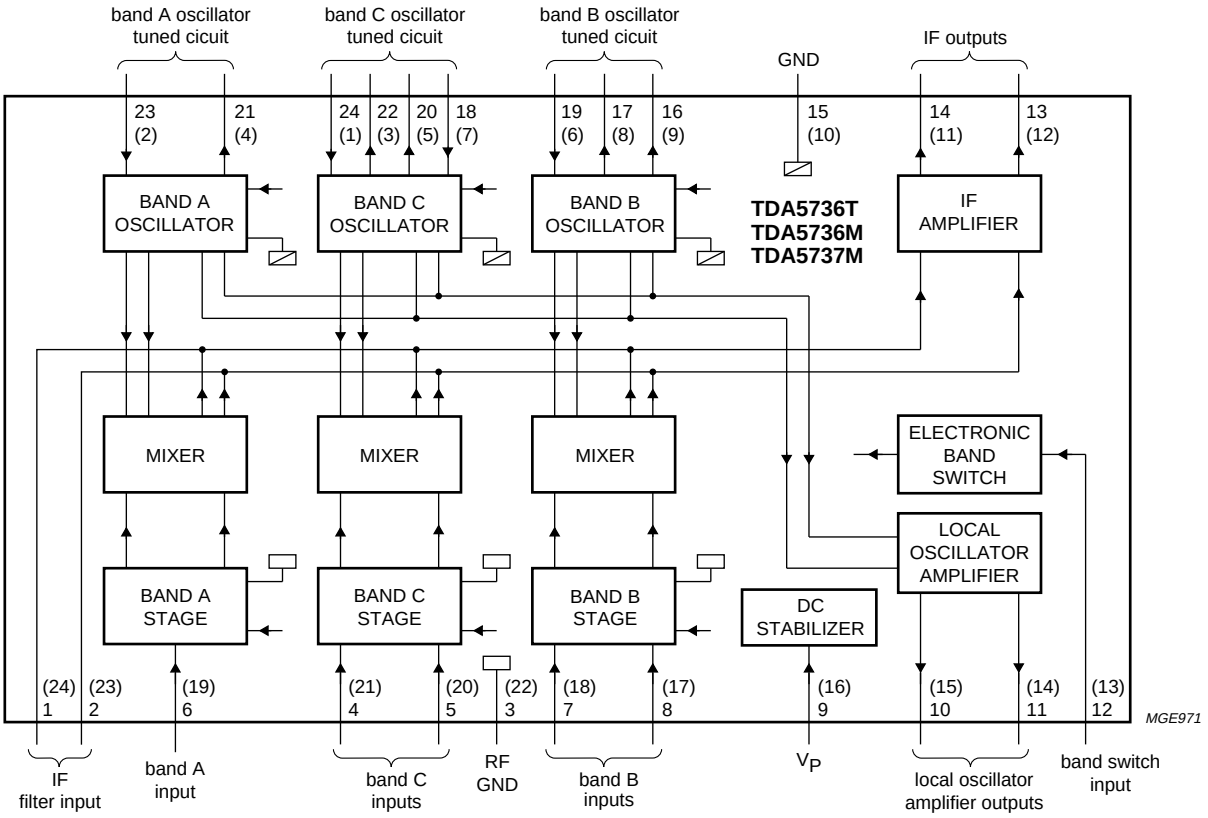

The numbers in parenthesis represent the TDA5737M.

Fig.1 Block diagram.

PINNING

SYMBOL	PIN		DESCRIPTION
	TDA5736	TDA5737	
IFIN1	1	24	IF filter input 1
IFIN2	2	23	IF filter input 2
RFGND	3	22	ground for RF inputs
CIN1	4	21	band C input 1
CIN2	5	20	band C input 2
AIN	6	19	band A input
BIN1	7	18	band B input 1
BIN2	8	17	band B input 2
V_P	9	16	supply voltage
LOOUT1	10	15	local oscillator amplifier output 1
LOOUT2	11	14	local oscillator amplifier output 2
BS	12	13	band switch input
IFOUT1	13	12	IF amplifier output 1
IFOUT2	14	11	IF amplifier output 2
GND	15	10	ground (0 V)
BOSCOC1	16	9	band B oscillator output collector 1
BOSCOC2	17	8	band B oscillator output collector 2
COSCIB1	18	7	band C oscillator input base 1
BOSCIB	19	6	band B oscillator input base
COSCOC1	20	5	band C oscillator output collector 1
AOSCOC	21	4	band A oscillator output collector
COSCOC2	22	3	band C oscillator output collector 2
AOSCIB	23	2	band A oscillator input base
COSCIB2	24	1	band C oscillator input base 2

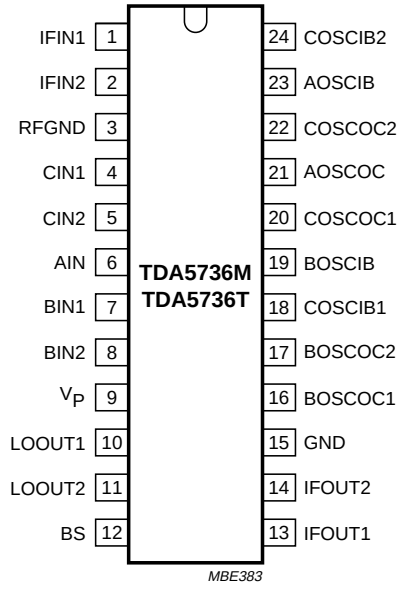

Fig.2 Pin configuration (TDA5736M, TDA5736T).

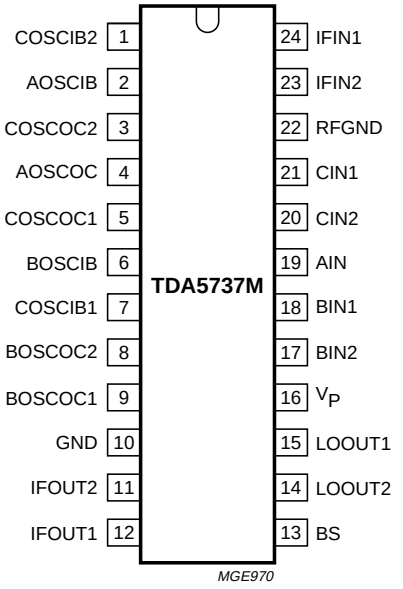

Fig.3 Pin configuration (TDA5737M).

LIMITING VALUES

In accordance with the Absolute Maximum Rating System (IEC 134).

SYMBOL	PARAMETER	MIN.	MAX.	UNIT
V_P	supply voltage	–0.3	+7.0	V
V_{SW}	switching voltage	–0.3	+7.0	V
$V_{n(max)}$	maximum voltage on each pin with a 22 kΩ resistor connected in series	–	35	V
I_O	output current of each pin to ground	–	–10	mA
$t_{sc(max)}$	maximum short-circuit time (all pins)	–	10	s
T_{stg}	IC storage temperature	–55	+150	°C
T_{amb}	operating ambient temperature	–20	+80	°C
T_j	junction temperature	–	150	°C

HANDLING

Human Body Model:

- For TDA5736 GND (15), RFGND (3), V_P (9) separate
- For TDA5737 GND (10), RFGND (22), V_P (16) separate.

All pins withstand 2000 V in accordance with the *"UZW-BO/FQ-A302"*. Philips specification equivalent to the *"MIL-STD-883C"* category B (2000 V) except pins 16 and 17 (8 and 9 for the TDA5737) which withstand 1000 V; R = 1500 Ω, C = 100 pF.

Machine Model:

- For TDA5736 GND (15), RFGND (3), V_P (9) separate
- For TDA5737 GND (10), RFGND (22), V_P (16) separate.

All pins withstand 200 V in accordance with the *"UZW-BO/FQ-B302"*, Philips specification (revision of: Nov. 6th, 1990) except pins 16 and 17 (8 and 9 for the TDA5737) which withstand 100 V; R = 0 Ω, C = 200 pF.

THERMAL CHARACTERISTICS

SYMBOL	PARAMETER	VALUE	UNIT
$R_{th\ j\text{-}a}$	thermal resistance from junction to ambient in free air		
	SSOP24	120	K/W
	SO24	75	K/W

CHARACTERISTICS

V_P = 5 V; T_{amb} = 25 °C; measured in circuit of Fig.17; unless otherwise specified.

SYMBOL	PARAMETER	CONDITIONS	MIN.	TYP.	MAX.	UNIT
Supply						
V_P	supply voltage		4.5	5.0	5.5	V
I_P	supply current		42	50	58	mA
V_{SW}	switching voltage depending on supply voltage V_P	band A; note 1	0	–	$0.18V_P$	V
		band B; note 1	$0.26V_P$	–	$0.47V_P$	V
		band C; note 1	$0.55V_P$	–	V_P	V
I_{SW}	switching current	band A; note 1	–	–	2	μA
		band B; note 1	–	–	10	μA
		band C; note 1	–	–	25	μA
Band A mixer (including IF amplifier)						
f_{RF}	frequency range	note 2	41	–	171	MHz
G_v	voltage gain	f_{RF} = 50 MHz; see Fig.4; note 3	20.5	23.0	25.5	dB
		f_{RF} = 170 MHz; see Fig.4; note 3	20.5	23.0	25.5	dB
NF	noise figure	f_{RF} = 50 MHz; see Figs.5 and 6	–	7.5	9	dB
		f_{RF} = 170 MHz; see Figs.5 and 6	–	9	10	dB
V_o	output voltage level causing 1% cross modulation in channel	f_{RF} = 50 MHz; see Fig.7	115	118	–	dBμV
		f_{RF} = 170 MHz; see Fig.7	113	116	–	dBμV
V_i	input voltage level causing 10 kHz pulling in channel	f_{RF} = 170 MHz; note 4	96	100	–	dBmV
g_{os}	optimum source conductance for noise figure	f_{RF} = 50 MHz	–	0.5	–	mS
		f_{RF} = 170 MHz	–	1.1	–	mS
Y_i	input admittance	f_{RF} = 50 to 170 MHz; see Fig.12	–	0.3	–	mS
C_i	input capacitance	f_{RF} = 50 to 170 MHz; see Fig.12	–	1.9	–	pF
Band A oscillator						
f_{osc}	frequency range	0.45 V < V_t < 28 V; notes 1 and 5	80	–	210	MHz
f_{shift}	frequency shift	ΔV_p = 5%; note 6	–	–	53	kHz
f_{drift}	frequency drift with no compensation	ΔT = 25 °C; NP0 capacitors; note 7	–	–	650	kHz
		5 s to 15 mins after switch on; NP0 capacitors; note 8	–	–	250	kHz
	frequency drift with compensation	ΔT = 25 °C; notes 7 and 9; see Fig.18	–	–	500	kHz
		5 s to 15 mins after switch on; notes 8 and 9; see Fig.18	–	–	100	kHz
V_{ripple}	ripple susceptibility of supply voltage (peak-to-peak value)	f_{osc} = 80 MHz; 4.75 V < V_P < 5.25 V; see Fig.8	20	–	–	mV
		f_{osc} = 210 MHz; 4.75 V < V_P < 5.25 V; see Fig.8	20	–	–	mV
Φ_N	phase noise	measured at the IF output at 10 kHz offset; V_o = 105 dBμV	81	–	–	dBc/Hz

SYMBOL	PARAMETER	CONDITIONS	MIN.	TYP.	MAX.	UNIT
Band B mixer (including IF amplifier)						
f_{RF}	frequency range	note 2	166	–	451	MHz
G_v	voltage gain	f_{RF} = 170 MHz; see Fig.9; note 3	31	34	37	dB
		f_{RF} = 450 MHz; see Fig.9; note 3	31	34	37	dB
N	noise figure (not corrected for image)	f_{RF} = 170 MHz; see Fig.10	–	8	10	dB
		f_{RF} = 450 MHz; see Fig.10	–	8	10	dB
V_o	output voltage level causing 1% cross modulation in channel	f_{RF} = 170 MHz; see Fig.7	114	117	–	dBµV
		f_{RF} = 450 MHz; see Fig.7	112	115	–	dBµV
V_i	input voltage level causing 10 kHz pulling in channel	f_{RF} = 450 MHz; note 4	83	87	–	dBµV
Z_i	input impedance ($R_s + jL_s\omega$)	f_{RF} = 170 to 450 MHz; see Fig.13	–	23	–	Ω
		f_{RF} = 170 to 450 MHz; see Fig.13	–	9	–	nH
Band B oscillator						
f_{osc}	frequency range	0.45 V < V_t < 28 V; notes 1 and 5	205	–	490	MHz
f_{shift}	frequency shift	ΔV_p = 5%; note 6	–	–	53	kHz
f_{drift}	frequency drift with no compensation	ΔT = 25 °C; NP0 capacitors; note 7	–	–	2000	kHz
		5 s to 15 mins after switch on; NP0 capacitors; note 8	–	–	750	kHz
	frequency drift with compensation	ΔT = 25 °C; notes 7 and 9; see Fig.18	–	–	750	kHz
		5 s to 15 mins after switch on; notes 8 and 9; see Fig.18	–	–	300	kHz
V_{ripple}	ripple susceptibility of supply voltage (peak-to-peak value)	f_{osc} = 250 MHz; 4.75 V < V_P < 5.25 V; see Fig.8	20	–	–	mV
		f_{osc} = 490 MHz; 4.75 V < V_P < 5.25 V; see Fig.8	20	–	–	mV
Φ_N	phase noise	measured at the IF output at 10 kHz offset; V_o = 105 dBmV	81	–	–	dBc/Hz
Band C Mixer (including IF amplifier)						
f_{RF}	frequency range	note 2	446	–	861	MHz
G_v	voltage gain	f_{RF} = 450 MHz; see Fig.9; note 3	31	34	37	dB
		f_{RF} = 860 MHz; see Fig.9; note 3	31	34	37	dB
N	noise figure (not corrected for image)	f_{RF} = 450 MHz; see Fig.10	–	9	11	dB
		f_{RF} = 860 MHz; see Fig.10	–	9	11	dB
V_o	output voltage level causing 1% cross modulation in channel	f_{RF} = 450 MHz; see Fig.7	112	115	–	dBµV
		f_{RF} = 860 MHz; see Fig.7	112	115	–	dBµV
V_i	input voltage level causing 10 kHz pulling in channel	f_{RF} = 860 MHz; note 4	91	95	–	dBµV
Z_I	input impedance ($R_s + jL_s\omega$)	f_{RF} = 450 to 860 MHz; see Fig.14	–	28	–	Ω
		f_{RF} = 450 to 860 MHz; see Fig.14	–	10	–	nH

SYMBOL	PARAMETER	CONDITIONS	MIN.	TYP.	MAX.	UNIT
Band C oscillator						
f_{osc}	frequency range	0.45 V < V_t < 28 V; notes 1 and 5	485	–	900	MHz
f_{shift}	frequency shift	ΔV_P = 5%; note 6	–	–	53	kHz
f_{drift}	frequency drift with no compensation	ΔT = 25 °C; NP0 capacitors; note 7	–	–	2800	kHz
		5 s to 15 mins after switch on; NP0 capacitors; note 8	–	–	700	kHz
	frequency drift with compensation	ΔT = 25 °C; notes 7 and 9; see Fig.18	–	–	1000	kHz
		5 s to 15 mins after switch on; notes 8 and 9; see Fig.18	–	–	250	kHz
V_{ripple}	ripple susceptibility of supply voltage (peak to peak value)	f_{osc} = 485 MHz; 4.75 V < V_P < 5.25 V; see Fig.8	20	–	–	mV
		f_{osc} = 900 MHz; 4.75 V < V_P < 5.25 V; see Fig.8	18	–	–	mV
Φ_N	phase noise	measured at the IF output at 10 kHz offset; V_o = 105 dBμV	81	–	–	dBc/Hz
LO output						
Z_O	output admittance (Y_P+jωC_P)	Y_P = 80 MHz; see Fig.12	–	2.5	–	mS
		Y_P = 900 MHz; see Fig.12	–	5	–	mS
		C_P; see Fig.12	–	0.9	–	pF
V_o	output voltage	R_L = 50 Ω; 0 < V_t < 35 V	80	91	100	dBμV
SRF	spurious signal on LO output with respect to LO output signal	R_L = 50 Ω; 0.2 V < V_t < 35 V; notes 1 and 10	–	–	–10	dB
HLO	LO signal harmonics with respect to LO signal	R_L = 50 Ω; 0 < V_t < 35 V; note 1	–	–	–10	dB
IF amplifier						
S_{22}	output reflection coefficient	magnitude; see Fig.15	–	–16	–	dB
		phase; see Fig.15	–	12	–	deg.
Z_O	output impedance (R_S + jL_Sω)	R_S	–	67	–	Ω
		L_S	–	20	–	nH

Notes

1. –20 °C < T_{amb} < +80 °C; 4.5 V < V_P < 5.5 V.
2. The RF frequency range is defined by the oscillator frequency range and the intermediate frequency.
3. The gain is defined as the transducer gain (measured in Fig.17) plus the voltage transformation ratio of L7 to L8 (10 : 2, 15.4 dB including transformer loss).
4. The input level causing 10 kHz frequency detuning at the LO output. f_{osc} = f_{RF} + 33.4 MHz.
5. Limits are related to the tank circuits used in Fig.17. Frequency bands may be adjusted by the choice of external components.
6. The frequency shift is defined as the change in oscillator frequency when the supply voltage varies from V_P = 5 to 4.75 V and from V_P = 5 to 5.25 V.

7. The frequency drift is defined as the change in oscillator frequency when the ambient temperature varies from T_{amb} = 25 to 0 °C and from T_{amb} = 25 to 50 °C.
8. Switch-on drift is defined as the change in oscillator frequency between 5 s and 15 mins after switch on.
9. With thermal compensation, the capacitors of the tank circuits have the following temperature coefficients:
   a) In band A: C1, C6 and C8 are N750.
   b) In band B: C4, C11, C12, C13 and C36 are N750.
   c) In band C: C5, C7, C9 and C10 are N750; C2 is N220 and C3 is NP0.
10. SRF: spurious signal on LO with respect to LO output signal:
    a) RF level = 120 dBµV at f_{RF} < 180 MHz.
    b) RF level = 107.5 dBµV at f_{RF} = 180 to 225 MHz.
    c) RF level = 97 dBµV at f_{RF} = 225 to 860 MHz.

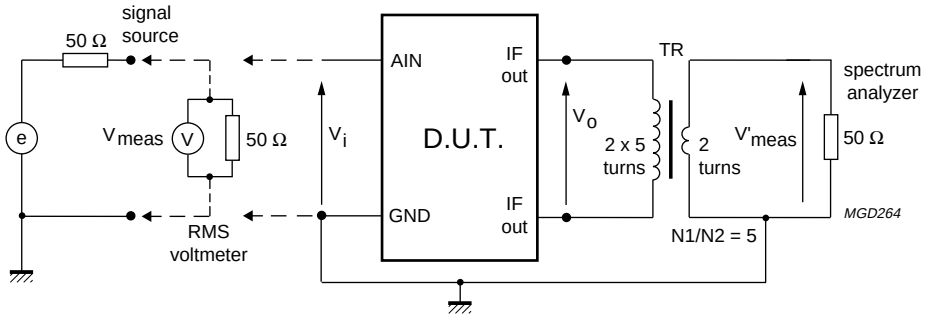

Z_I (AIN) >> 50 Ω $V_i = 2 \times V_{meas}$.
$V_i = V_{meas}$ + 6 dB.
$V_o = V'_{meas}$ + 15.4 dB (transformer ratio N1/N2 = 5 and transformer loss).
$G_v = 20 \log (V_o/V_i)$.

Fig.4 Band A gain measurement.

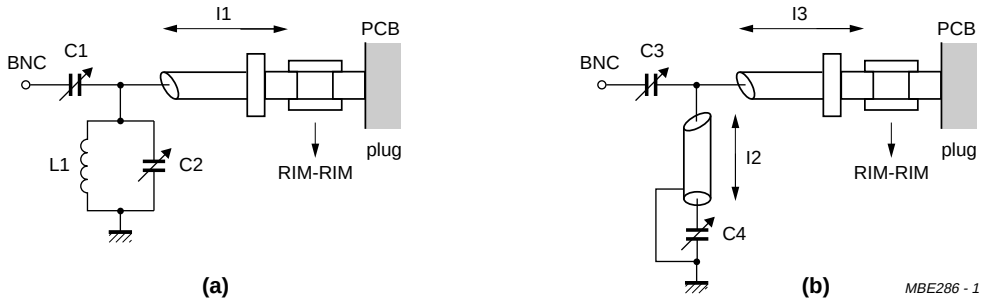

(a) For f_{RF} = 50 MHz:
mixer A frequency response measured = 57 MHz, loss = 0 dB
image suppression = 16 dB.

C1 = 9 pF

C2 = 15 pF

L1 = 7 turns (diam. = 5.5 mm, wire diam. = 0.5 mm)

I1 = semi rigid cable (RIM): 5 cm long (semi rigid cable (RIM); 33 dB/100 m; 50 Ω; 96 pF/m).

(b) For f_{RF} = 150 MHz:
mixer A frequency response measured = 150.3 MHz, loss = 1.3 dB
image suppression = 13 dB.

C3 = 5 pF

C4 = 25 pF

I2 = semi rigid cable (RIM): 30 cm long

I3 = semi rigid cable (RIM): 5 cm long (semi rigid cable (RIM); 33 dB/100 m; 50 Ω; 96 pF/m).

Fig.5 Input circuit for optimum noise figure in band A.

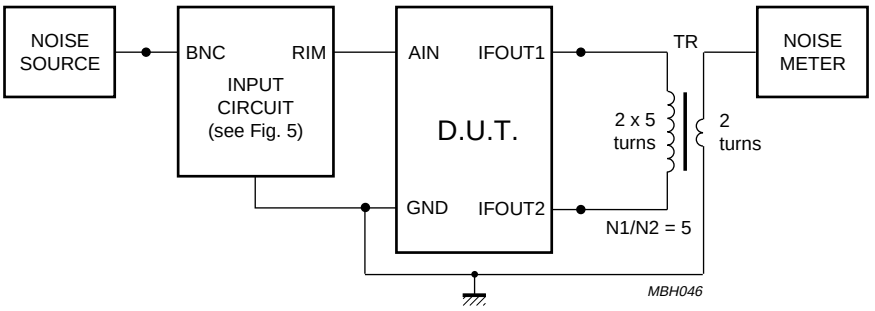

NF = NF_{meas} – loss (input circuit) dB.

Fig.6 Noise figure measurement in band A.

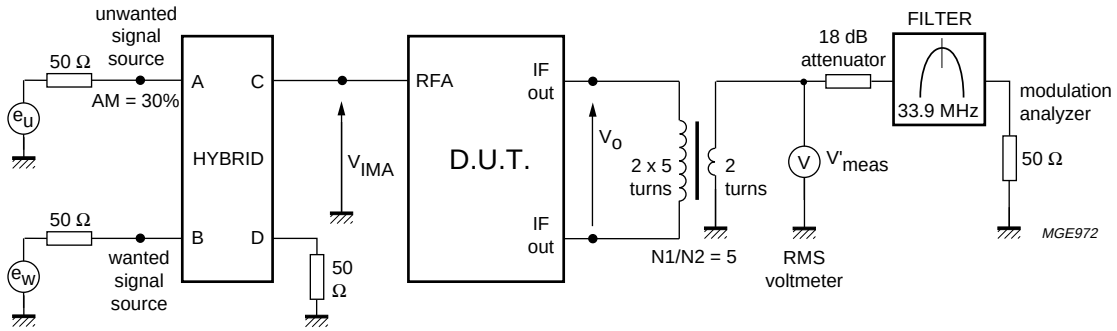

$V'_{meas} = V_o - 15.4$ dB (transformer ratio N1/N2 = 5 and transformer loss).

Wanted output signal at f_{RFW} = 50 MHz (170 MHz); V_{ow} = 80 dBµV.

We measure the level of the unwanted signal V_{ou} causing 1% AM modulation in the wanted output signal; f_{RFU} = 45.5 MHz (165.5 MHz); f_{osc} = 83.9 MHz (203.9 MHz).

$V_{ou} = V'_{meas} + 15.4$ dB.

Filter characteristics: f_c = 33.9 MHz, f_{-3dBBW} = 1 MHz; $f_{-30dBBW}$ = 2.3 MHz.

Fig.7 Cross modulation measurement in band A.

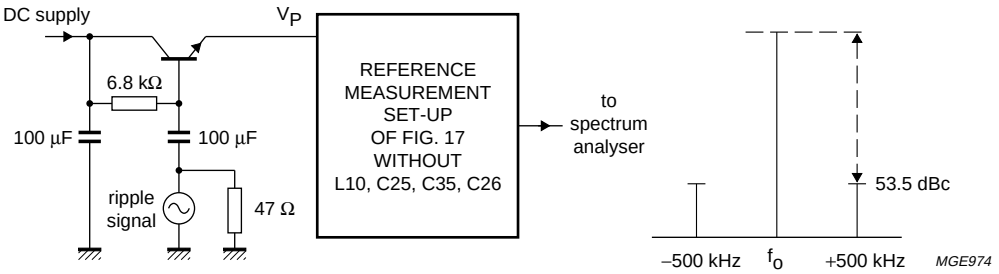

The ripple susceptibility is defined as the level of a signal added to the supply voltage causing sidebands in the LO output at 53.5 dBc. This signal has a frequency between 20 Hz and 500 kHz.

Fig.8 Ripple susceptibility.

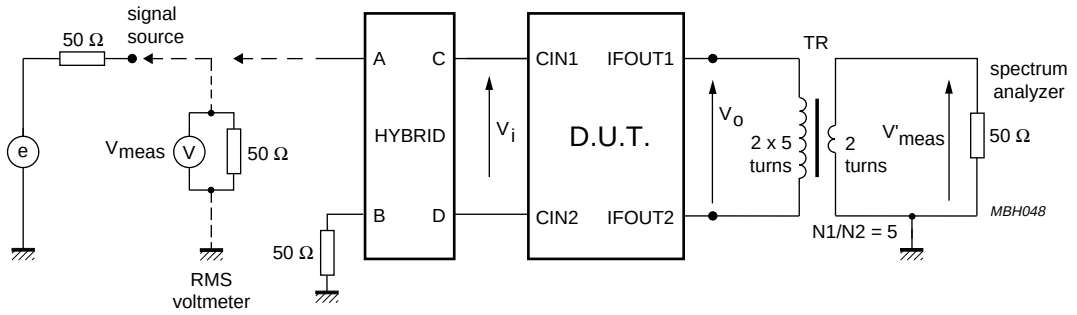

$loss_{(hybrid)}$ = 1 dB.
$V_i = V_{meas} - loss_{(hybrid)}$.
$V_o = V'_{meas}$ + 15.4 dB (transformer ratio N1/N2 and transformer loss).
Voltage gain for band B and C = 20 log (V_o/V_i).

Fig.9 Gain measurement in bands B and C.

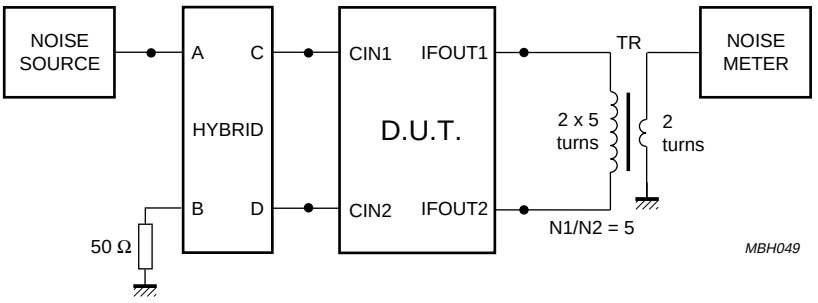

Loss of the hybrid: 1 dB.
$NF = NF_{meas}$ – loss of the hybrid.

Fig.10 Noise figure measurement in bands B and C.

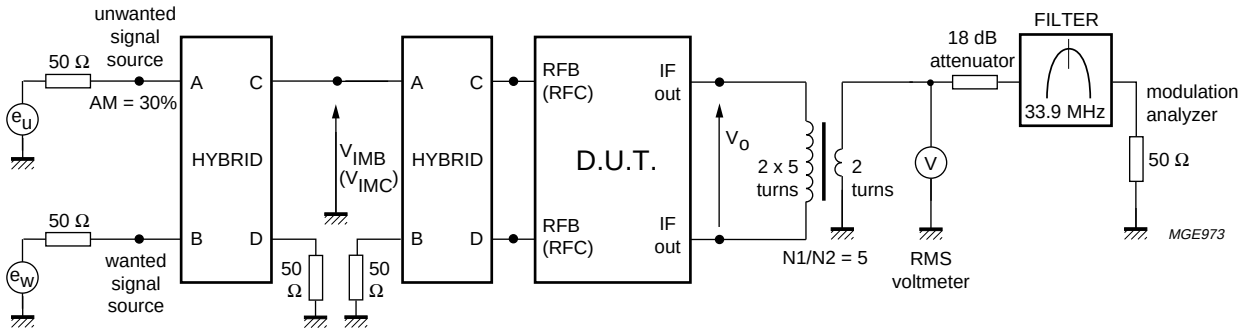

$V'_{meas} = V_o - 15.4$ dB (transformer ratio N1/N2 = 5 and transformer loss).

Wanted output signal at f_{RFW} = 170 or 450 MHz (450 or 860 MHz); V_{ow} = 70 dBµV.

We measure the level of the unwanted signal V_{ou} causing 1% AM modulation in the wanted output signal; f_{RFU} = 165.5 or 445.5 MHz (445.5 or 855.5 MHz); f_{OSC} = 203.9 or 483.9 MHz (483.9 or 893.9 MHz).

$V_{ou} = V'_{meas} + 15.4$ dB.

Filter characteristics: f_c = 33.9 MHz, f_{-3dBBW} = 1 MHz; $f_{-30dBBW}$ = 2.3 MHz.

Fig.11 Cross modulation measurement in bands B and C.

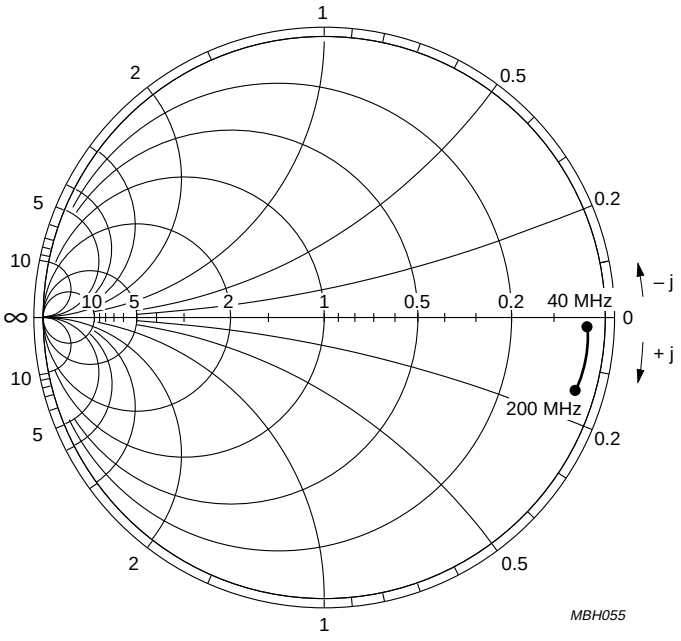

Fig.12 Input admittance (S_{11}) of the band A mixer input (40 to 200 MHz); Y_o = 20 mS.

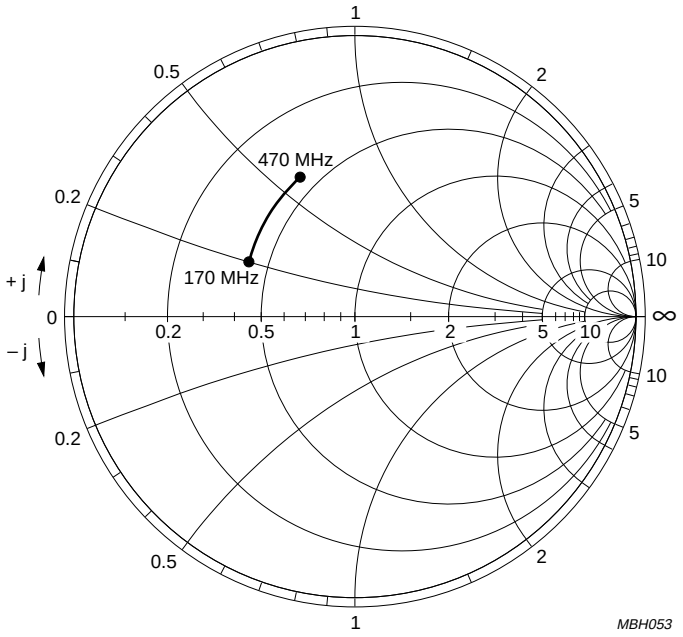

Fig.13 Input impedance (S_{11}) of the band B mixer input (170 to 470 MHz); Z_o = 50 Ω.

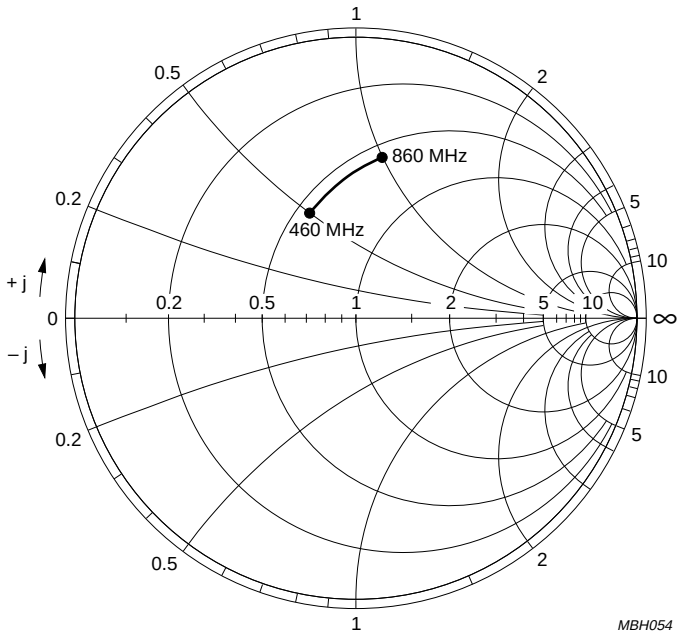

Fig.14 Input impedance (S_{11}) of the band C mixer input (460 to 860 MHz); Z_o = 50 Ω.

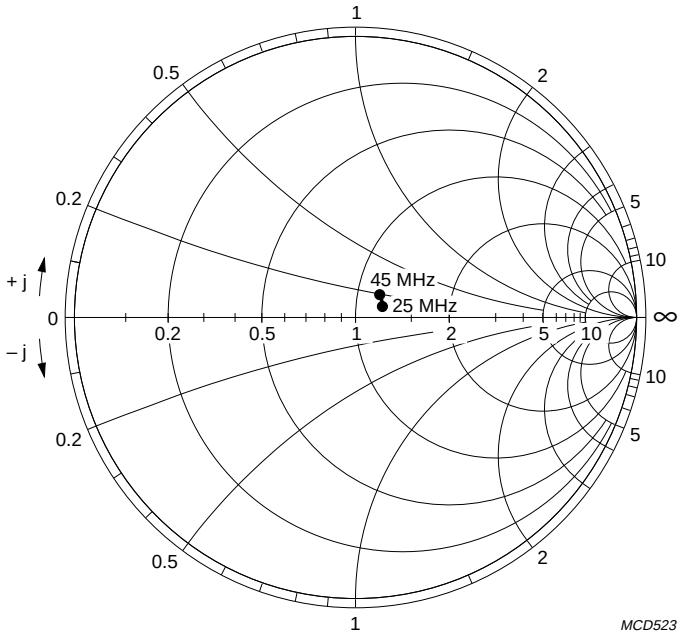

Fig.15 Input impedance (S_{22}) of the IF amplifier (25 to 45 MHz); Z_o = 100 Ω.

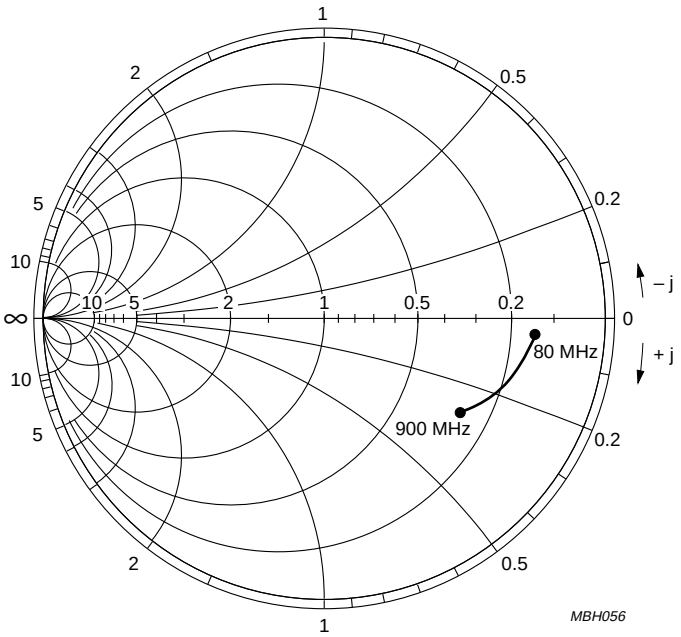

Fig.16 Input impedance (S_{22}) of the LO amplifier (80 to 900 MHz); Y_o = 20 mS.

APPLICATION INFORMATION

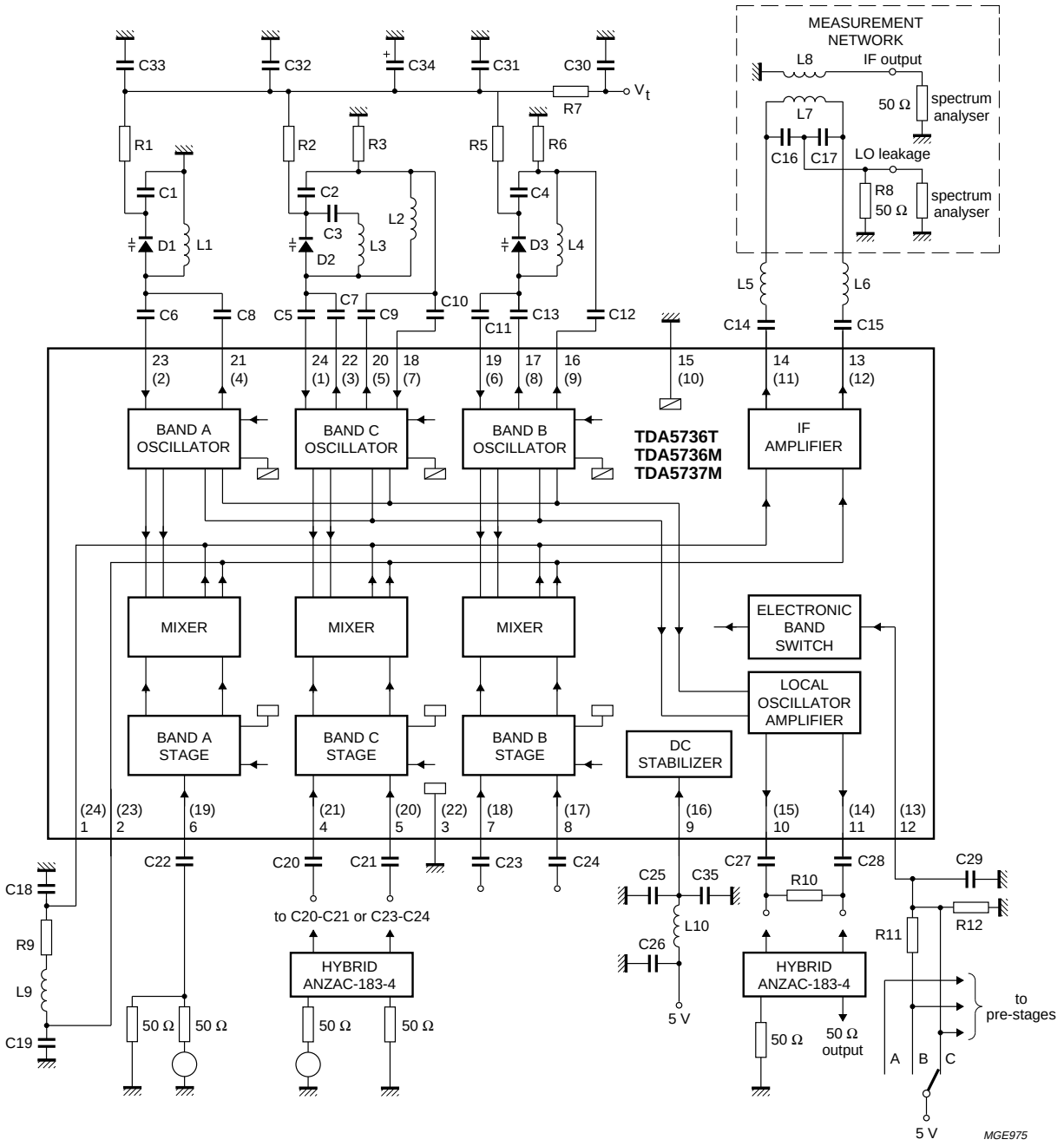

L7, L8, C16, C17 and R8 are only necessary for measurements (these components are not used in a tuner).
The numbers in parenthesis represent the TDA5737M.

Fig.17 Measurement circuit.

Table 1 Capacitors of Fig.17 (all SMD and NP0 except C34 and C35)

NUMBER	VALUE
C1	82 pF
C2	5.6 pF
C3	100 pF
C4	82 pF
C5	1 pF
C6	2 pF
C7	2 pF
C8	2 pF
C9	2 pF
C10	1 pF
C11	3.3 pF
C12	3.3 pF
C13	4.7 pF
C14	1 nF
C15	1 nF
C16	39 pF
C17	39 pF
C18	68 pF
C19	68 pF
C20	1 nF
C21	1 nF
C22	1 nF
C23	1 nF
C24	1 nF
C25	2.2 nF
C26	1 nF
C27	1 nF
C28	1 nF
C29	1 nF
C30	1 nF
C31	1 nF
C32	1 nF
C33	1 nF
C34	2.2 μF, 40 V electrolytic
C35	4.7 nF

Table 2 Resistors of Fig.17 (all SMD)

NUMBER	VALUE
R1	47 kΩ
R2	22 kΩ
R3	22 kΩ
R5	27 kΩ
R6	27 kΩ
R7	10 kΩ
R8	50 Ω
R9	4.7 Ω
R10	100 Ω
R11	27 kΩ
R12	15 kΩ

Table 3 Diodes, coils and transformers of Fig.17

NUMBER	VALUE
Diodes	
D1	BB132
D2	BB134
D3	BB133
Coils(1)	
L1	7.5 t (∅ 3 mm)
L2	2.5 t (∅ 3.5 mm)
L3	1.5 t (∅ 2.5 mm)
L4	2.5 t (∅ 3 mm)
L5	5.5 t (∅ 2.5 mm)
L6	5.5 t (∅ 2.5 mm)
L9	12.5 t (∅ 5 mm)
L10	2.2 μH (choke coil)
Transformers(2)	
L7	2 × 5 t
L8	2 t

Notes

1. Wire size for L1 to L6 is 0.4 mm.
2. Coil type: TOKO 7kL.

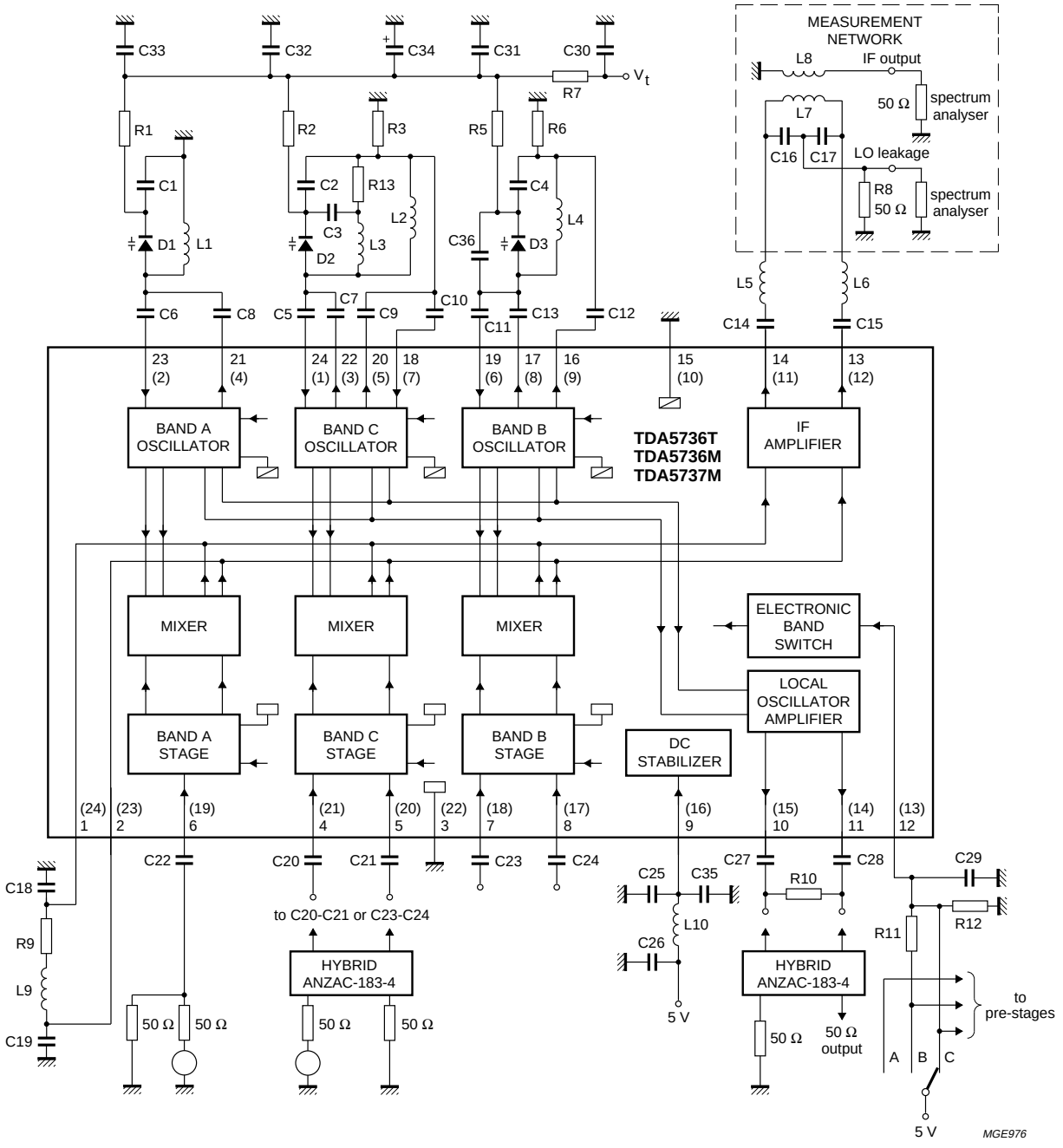

L7, L8, C16, C17 and R8 are only necessary for measurements (these components are not used in a tuner).
The numbers in parenthesis represent the TDA5737M.

Fig.18 Measurement circuit with thermal compensation.

Table 4 Capacitors of Fig.18 (all SMD except C34)

NUMBER	VALUE
C1	62 pF
C2	6 pF
C3	100 pF
C4	68 pF
C5	1.2 pF
C6	2 pF
C7	1.2 pF
C8	2 pF
C9	1.5 pF
C10	1.5 pF
C11	3 pF
C12	3 pF
C13	4.3 pF
C14	1 nF
C15	1 nF
C16	39 pF
C17	39 pF
C18	68 pF
C19	68 pF
C20	1 nF
C21	1 nF
C22	1 nF
C23	1 nF
C24	1 nF
C25	2.2 nF
C26	1 nF
C27	1 nF
C28	1 nF
C29	1 nF
C30	1 nF
C31	1 nF
C32	1 nF
C33	1 nF
C34	2.2 μF; 40 V electrolytic
C35	4.7 nF
C36	0.5 pF

Table 5 Resistors of Fig.18 (all SMD)

NUMBER	VALUE
R1	47 kΩ
R2	22 kΩ
R3	22 kΩ
R5	27 kΩ
R6	27 kΩ
R7	10 kΩ
R8	50 Ω
R9	4.7 Ω
R10	100 Ω
R11	27 kΩ
R12	15 kΩ
R13	4.7 kΩ

Table 6 Diodes, coils and transformers of Fig.18

NUMBER	VALUE
Diodes	
D1	BB132
D2	BB134
D3	BB133
Coils(1)	
L1	7.5 t (∅ 3 mm)
L2	2.5 t (∅ 2 mm)
L3	2.5 t (∅ 2 mm)
L4	2.5 t (∅ 2.5 mm)
L5	5.5 t (∅ 2.5 mm)
L6	5.5 t (∅ 2.5 mm)
L9	12.5 t (∅ 5 mm)
L10	2.2 μH; choke coil
Transformers(2)	
L7	2 × 5 turns
L8	2 turns

Notes

1. The wire size for L1, L2, L5 and L6 is 0.4 mm. The wire size for L3 and L4 is 0.5 mm.
2. Coil type: TOKO 7kL.

INTERNAL PIN CONFIGURATION

SYMBOL	PIN		DESCRIPTION	AVERAGE DC VOLTAGE IN (V)[1] measured in circuit of Fig.17		
	TDA5736	TDA5737		BAND A	BAND B	BAND C
IFIN1	1	24	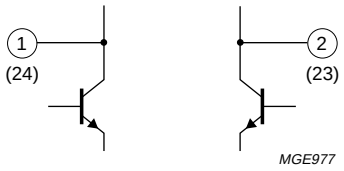	3.6	3.6	3.6
IFIN2	2	23		3.6	3.6	3.6
RFGND	3	22	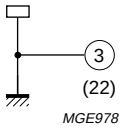	0	0	0
CIN1	4	21	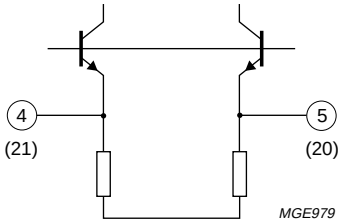	NR	NR	1.0
CIN2	5	20		NR	NR	1.0
AIN	6	19	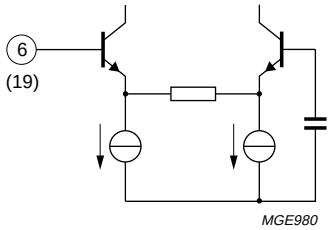	1.8	NR	NR
BIN1	7	18	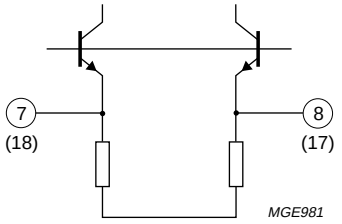	NR	1.0	NR
BIN2	8	17		NR	1.0	NR
V_P	9	16	supply voltage	5.0	5.0	5.0

SYMBOL	PIN		DESCRIPTION	AVERAGE DC VOLTAGE IN (V)(1) measured in circuit of Fig.17		
	TDA5736	TDA5737		BAND A	BAND B	BAND C
LOOUT1	10	15	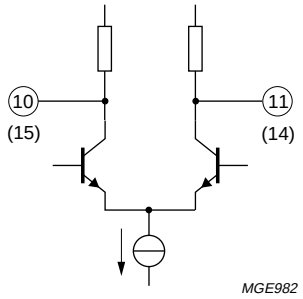	4.2	NR	NR
LOOUT2	11	14		4.2	NR	NR
BS	12	13	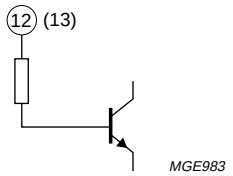	0.0	1.8	5.0
IFOUT1	13	12	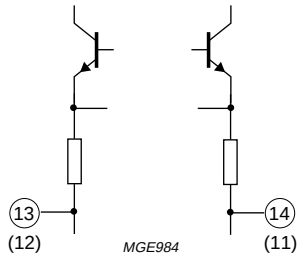	2.1	NR	NR
IFOUT2	14	11		2.1	NR	NR
GND	15	10	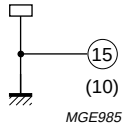	0.0	0.0	0.0
BOSCOC1	16	9	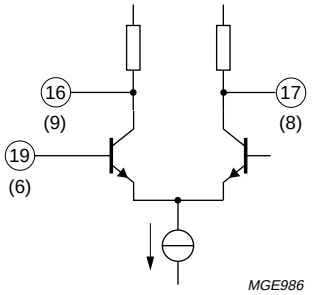	NR	2.7	NR
BOSCOC2	17	8		NR	2.7	NR
BOSCIB	19	6		NR	2.0	NR

SYMBOL	PIN		DESCRIPTION	AVERAGE DC VOLTAGE IN (V)(1) measured in circuit of Fig.17		
	TDA5736	TDA5737		BAND A	BAND B	BAND C
COSCIB1	18	7	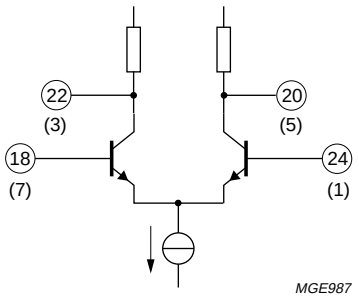	NR	NR	2.0
COSCOC1	20	5		NR	NR	2.7
COSCOC2	22	3		NR	NR	2.7
COSCIB2	24	1		NR	NR	2.0
AOSCOC	21	4	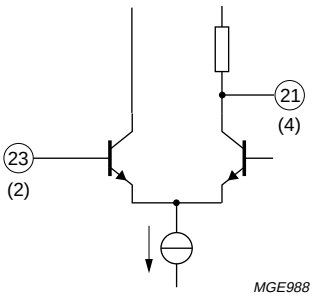	2.5	NR	NR
AOSCIB	23	2		2.0	NR	NR

Note

1. NR = not relevant.

PACKAGE OUTLINES

SSOP24: plastic shrink small outline package; 24 leads; body width 5.3 mm **SOT340-1**

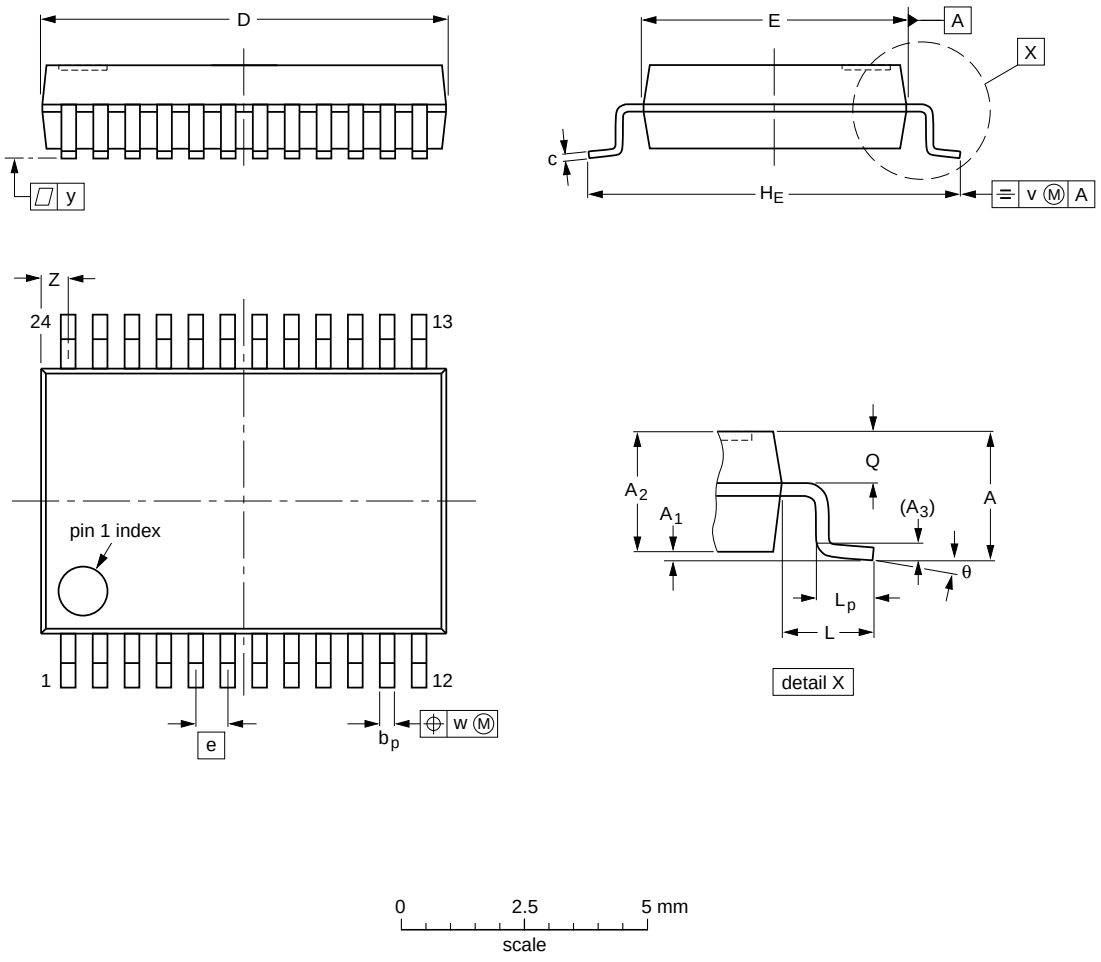

DIMENSIONS (mm are the original dimensions)

UNIT	A max.	A_1	A_2	A_3	b_p	c	$D^{(1)}$	$E^{(1)}$	e	H_E	L	L_p	Q	v	w	y	$Z^{(1)}$	θ
mm	2.0	0.21 0.05	1.80 1.65	0.25	0.38 0.25	0.20 0.09	8.4 8.0	5.4 5.2	0.65	7.9 7.6	1.25	1.03 0.63	0.9 0.7	0.2	0.13	0.1	0.8 0.4	8° 0°

Note

1. Plastic or metal protrusions of 0.20 mm maximum per side are not included.

OUTLINE VERSION	REFERENCES				EUROPEAN PROJECTION	ISSUE DATE
	IEC	JEDEC	EIAJ			
SOT340-1		MO-150AG				~~93-09-08~~ 95-02-04

SO24: plastic small outline package; 24 leads; body width 7.5 mm **SOT137-1**

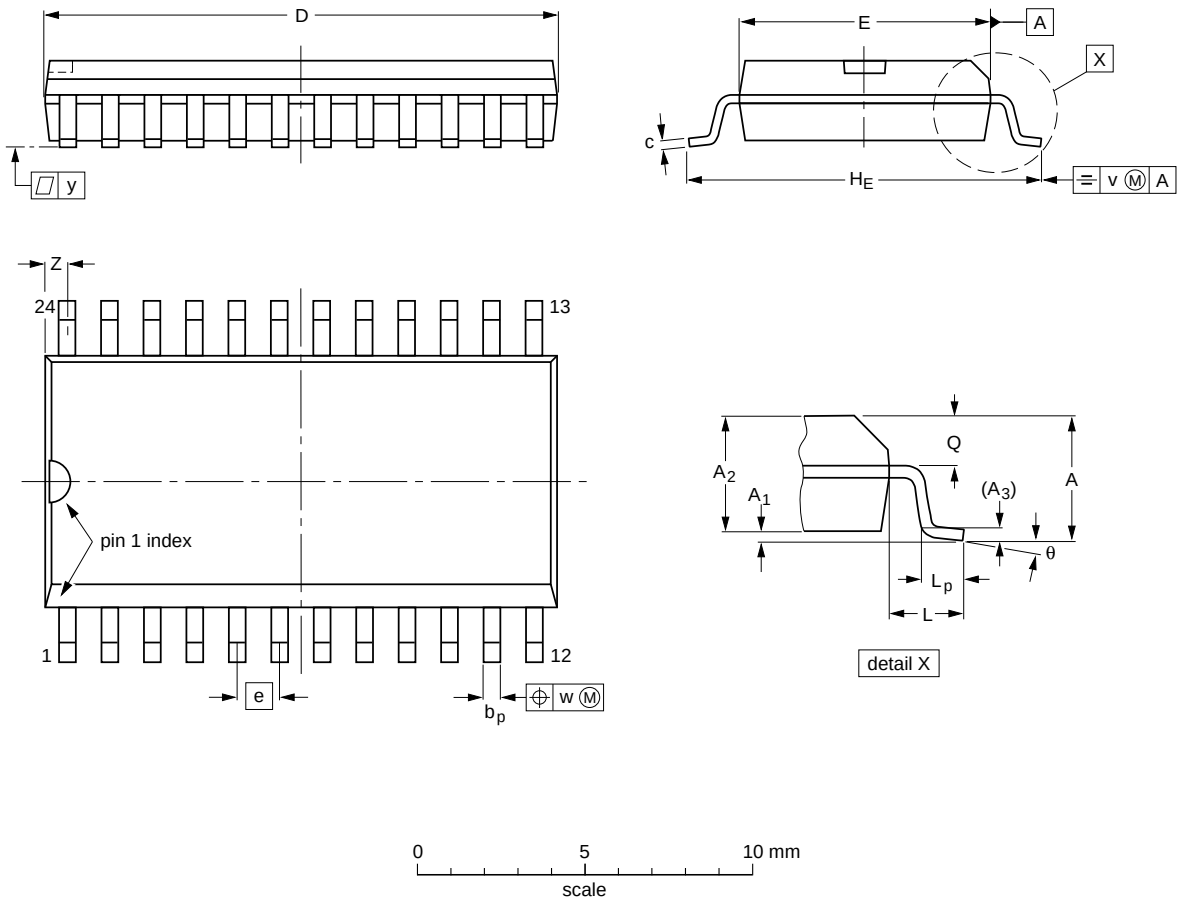

DIMENSIONS (inch dimensions are derived from the original mm dimensions)

UNIT	A max.	A_1	A_2	A_3	b_p	c	$D^{(1)}$	$E^{(1)}$	e	H_E	L	L_p	Q	v	w	y	$Z^{(1)}$	θ
mm	2.65	0.30 0.10	2.45 2.25	0.25	0.49 0.36	0.32 0.23	15.6 15.2	7.6 7.4	1.27	10.65 10.00	1.4	1.1 0.4	1.1 1.0	0.25	0.25	0.1	0.9 0.4	8° 0°
inches	0.10	0.012 0.004	0.096 0.089	0.01	0.019 0.014	0.013 0.009	0.61 0.60	0.30 0.29	0.050	0.42 0.39	0.055	0.043 0.016	0.043 0.039	0.01	0.01	0.004	0.035 0.016	

Note

1. Plastic or metal protrusions of 0.15 mm maximum per side are not included.

OUTLINE VERSION	REFERENCES				EUROPEAN PROJECTION	ISSUE DATE
	IEC	JEDEC	EIAJ			
SOT137-1	075E05	MS-013AD				~~92-11-17~~ 95-01-24

SOLDERING

Introduction

There is no soldering method that is ideal for all IC packages. Wave soldering is often preferred when through-hole and surface mounted components are mixed on one printed-circuit board. However, wave soldering is not always suitable for surface mounted ICs, or for printed-circuits with high population densities. In these situations reflow soldering is often used.

This text gives a very brief insight to a complex technology. A more in-depth account of soldering ICs can be found in our *"IC Package Databook"* (order code 9398 652 90011).

Reflow soldering

Reflow soldering techniques are suitable for all SO and SSOP packages.

Reflow soldering requires solder paste (a suspension of fine solder particles, flux and binding agent) to be applied to the printed-circuit board by screen printing, stencilling or pressure-syringe dispensing before package placement.

Several techniques exist for reflowing; for example, thermal conduction by heated belt. Dwell times vary between 50 and 300 seconds depending on heating method. Typical reflow temperatures range from 215 to 250 °C.

Preheating is necessary to dry the paste and evaporate the binding agent. Preheating duration: 45 minutes at 45 °C.

Wave soldering

SO

Wave soldering techniques can be used for all SO packages if the following conditions are observed:

- A double-wave (a turbulent wave with high upward pressure followed by a smooth laminar wave) soldering technique should be used.
- The longitudinal axis of the package footprint must be parallel to the solder flow.
- The package footprint must incorporate solder thieves at the downstream end.

SSOP

Wave soldering is **not** recommended for SSOP packages. This is because of the likelihood of solder bridging due to closely-spaced leads and the possibility of incomplete solder penetration in multi-lead devices.

If wave soldering cannot be avoided, the following conditions must be observed:

- **A double-wave (a turbulent wave with high upward pressure followed by a smooth laminar wave) soldering technique should be used.**
- **The longitudinal axis of the package footprint must be parallel to the solder flow and must incorporate solder thieves at the downstream end.**

Even with these conditions, only consider wave soldering SSOP packages that have a body width of 4.4 mm, that is SSOP16 (SOT369-1) or SSOP20 (SOT266-1).

METHOD (SO AND SSOP)

During placement and before soldering, the package must be fixed with a droplet of adhesive. The adhesive can be applied by screen printing, pin transfer or syringe dispensing. The package can be soldered after the adhesive is cured.

Maximum permissible solder temperature is 260 °C, and maximum duration of package immersion in solder is 10 seconds, if cooled to less than 150 °C within 6 seconds. Typical dwell time is 4 seconds at 250 °C.

A mildly-activated flux will eliminate the need for removal of corrosive residues in most applications.

Repairing soldered joints

Fix the component by first soldering two diagonally-opposite end leads. Use only a low voltage soldering iron (less than 24 V) applied to the flat part of the lead. Contact time must be limited to 10 seconds at up to 300 °C. When using a dedicated tool, all other leads can be soldered in one operation within 2 to 5 seconds between 270 and 320 °C.

DEFINITIONS

Data sheet status	
Objective specification	This data sheet contains target or goal specifications for product development.
Preliminary specification	This data sheet contains preliminary data; supplementary data may be published later.
Product specification	This data sheet contains final product specifications.
Limiting values	
Limiting values given are in accordance with the Absolute Maximum Rating System (IEC 134). Stress above one or more of the limiting values may cause permanent damage to the device. These are stress ratings only and operation of the device at these or at any other conditions above those given in the Characteristics sections of the specification is not implied. Exposure to limiting values for extended periods may affect device reliability.	
Application information	
Where application information is given, it is advisory and does not form part of the specification.	

LIFE SUPPORT APPLICATIONS

These products are not designed for use in life support appliances, devices, or systems where malfunction of these products can reasonably be expected to result in personal injury. Philips customers using or selling these products for use in such applications do so at their own risk and agree to fully indemnify Philips for any damages resulting from such improper use or sale.

Philips Semiconductors – a worldwide company

Argentina: see South America

Australia: 34 Waterloo Road, NORTH RYDE, NSW 2113,
Tel. +61 2 9805 4455, Fax. +61 2 9805 4466

Austria: Computerstr. 6, A-1101 WIEN, P.O. Box 213,
Tel. +43 1 60 101, Fax. +43 1 60 101 1210

Belarus: Hotel Minsk Business Center, Bld. 3, r. 1211, Volodarski Str. 6,
220050 MINSK, Tel. +375 172 200 733, Fax. +375 172 200 773

Belgium: see The Netherlands

Brazil: see South America

Bulgaria: Philips Bulgaria Ltd., Energoproject, 15th floor,
51 James Bourchier Blvd., 1407 SOFIA,
Tel. +359 2 689 211, Fax. +359 2 689 102

Canada: PHILIPS SEMICONDUCTORS/COMPONENTS,
Tel. +1 800 234 7381

China/Hong Kong: 501 Hong Kong Industrial Technology Centre,
72 Tat Chee Avenue, Kowloon Tong, HONG KONG,
Tel. +852 2319 7888, Fax. +852 2319 7700

Colombia: see South America

Czech Republic: see Austria

Denmark: Prags Boulevard 80, PB 1919, DK-2300 COPENHAGEN S,
Tel. +45 32 88 2636, Fax. +45 31 57 1949

Finland: Sinikalliontie 3, FIN-02630 ESPOO,
Tel. +358 9 615800, Fax. +358 9 61580/xxx

France: 4 Rue du Port-aux-Vins, BP317, 92156 SURESNES Cedex,
Tel. +33 1 40 99 6161, Fax. +33 1 40 99 6427

Germany: Hammerbrookstraße 69, D-20097 HAMBURG,
Tel. +49 40 23 53 60, Fax. +49 40 23 536 300

Greece: No. 15, 25th March Street, GR 17778 TAVROS/ATHENS,
Tel. +30 1 4894 339/239, Fax. +30 1 4814 240

Hungary: see Austria

India: Philips INDIA Ltd, Shivsagar Estate, A Block, Dr. Annie Besant Rd.
Worli, MUMBAI 400 018, Tel. +91 22 4938 541, Fax. +91 22 4938 722

Indonesia: see Singapore

Ireland: Newstead, Clonskeagh, DUBLIN 14,
Tel. +353 1 7640 000, Fax. +353 1 7640 200

Israel: RAPAC Electronics, 7 Kehilat Saloniki St, TEL AVIV 61180,
Tel. +972 3 645 0444, Fax. +972 3 649 1007

Italy: PHILIPS SEMICONDUCTORS, Piazza IV Novembre 3,
20124 MILANO, Tel. +39 2 6752 2531, Fax. +39 2 6752 2557

Japan: Philips Bldg 13-37, Kohnan 2-chome, Minato-ku, TOKYO 108,
Tel. +81 3 3740 5130, Fax. +81 3 3740 5077

Korea: Philips House, 260-199 Itaewon-dong, Yongsan-ku, SEOUL,
Tel. +82 2 709 1412, Fax. +82 2 709 1415

Malaysia: No. 76 Jalan Universiti, 46200 PETALING JAYA, SELANGOR,
Tel. +60 3 750 5214, Fax. +60 3 757 4880

Mexico: 5900 Gateway East, Suite 200, EL PASO, TEXAS 79905,
Tel. +9-5 800 234 7381

Middle East: see Italy

Netherlands: Postbus 90050, 5600 PB EINDHOVEN, Bldg. VB,
Tel. +31 40 27 82785, Fax. +31 40 27 88399

New Zealand: 2 Wagener Place, C.P.O. Box 1041, AUCKLAND,
Tel. +64 9 849 4160, Fax. +64 9 849 7811

Norway: Box 1, Manglerud 0612, OSLO,
Tel. +47 22 74 8000, Fax. +47 22 74 8341

Philippines: Philips Semiconductors Philippines Inc.,
106 Valero St. Salcedo Village, P.O. Box 2108 MCC, MAKATI,
Metro MANILA, Tel. +63 2 816 6380, Fax. +63 2 817 3474

Poland: Ul. Lukiska 10, PL 04-123 WARSZAWA,
Tel. +48 22 612 2831, Fax. +48 22 612 2327

Portugal: see Spain

Romania: see Italy

Russia: Philips Russia, Ul. Usatcheva 35A, 119048 MOSCOW,
Tel. +7 095 755 6918, Fax. +7 095 755 6919

Singapore: Lorong 1, Toa Payoh, SINGAPORE 1231,
Tel. +65 350 2538, Fax. +65 251 6500

Slovakia: see Austria

Slovenia: see Italy

South Africa: S.A. PHILIPS Pty Ltd., 195-215 Main Road Martindale,
2092 JOHANNESBURG, P.O. Box 7430 Johannesburg 2000,
Tel. +27 11 470 5911, Fax. +27 11 470 5494

South America: Rua do Rocio 220, 5th floor, Suite 51,
04552-903 São Paulo, SÃO PAULO - SP, Brazil,
Tel. +55 11 821 2333, Fax. +55 11 829 1849

Spain: Balmes 22, 08007 BARCELONA,
Tel. +34 3 301 6312, Fax. +34 3 301 4107

Sweden: Kottbygatan 7, Akalla, S-16485 STOCKHOLM,
Tel. +46 8 632 2000, Fax. +46 8 632 2745

Switzerland: Allmendstrasse 140, CH-8027 ZÜRICH,
Tel. +41 1 488 2686, Fax. +41 1 481 7730

Taiwan: Philips Semiconductors, 6F, No. 96, Chien Kuo N. Rd., Sec. 1,
TAIPEI, Taiwan Tel. +886 2 2134 2870, Fax. +886 2 2134 2874

Thailand: PHILIPS ELECTRONICS (THAILAND) Ltd.,
209/2 Sanpavuth-Bangna Road Prakanong, BANGKOK 10260,
Tel. +66 2 745 4090, Fax. +66 2 398 0793

Turkey: Talatpasa Cad. No. 5, 80640 GÜLTEPE/ISTANBUL,
Tel. +90 212 279 2770, Fax. +90 212 282 6707

Ukraine: PHILIPS UKRAINE, 4 Patrice Lumumba str., Building B, Floor 7,
252042 KIEV, Tel. +380 44 264 2776, Fax. +380 44 268 0461

United Kingdom: Philips Semiconductors Ltd., 276 Bath Road, Hayes,
MIDDLESEX UB3 5BX, Tel. +44 181 730 5000, Fax. +44 181 754 8421

United States: 811 East Arques Avenue, SUNNYVALE, CA 94088-3409,
Tel. +1 800 234 7381

Uruguay: see South America

Vietnam: see Singapore

Yugoslavia: PHILIPS, Trg N. Pasica 5/v, 11000 BEOGRAD,
Tel. +381 11 625 344, Fax.+381 11 635 777

For all other countries apply to: Philips Semiconductors, Marketing & Sales Communications,
Building BE-p, P.O. Box 218, 5600 MD EINDHOVEN, The Netherlands, Fax. +31 40 27 24825

Internet: http://www.semiconductors.philips.com

© Philips Electronics N.V. 1997

SCA53

All rights are reserved. Reproduction in whole or in part is prohibited without the prior written consent of the copyright owner.

The information presented in this document does not form part of any quotation or contract, is believed to be accurate and reliable and may be changed without notice. No liability will be accepted by the publisher for any consequence of its use. Publication thereof does not convey nor imply any license under patent- or other industrial or intellectual property rights.

Printed in The Netherlands 547047/1200/04/pp28 Date of release: 1997 Feb 24 Document order number: 9397 750 01692

Let's make things better.

Philips Semiconductors

PHILIPS