VIDEO CONTROL COMBINATION

The TDA3501 is a monolithic integrated circuit performing the control functions in a PAL/SECAM decoder which additionally comprises the integrated circuits TDA3510 (PAL decoder) and/or TDA3520 (SECAM decoder).
The required input signals are: luminance and colour difference −(R-Y) and −(B-Y), while linear RGB signals can be inserted from an external source.
RGB signals are provided at the output to drive the video output stages.
The TDA3501 has the following features:

- capacitive coupling of the input signals
- linear saturation control
- (G-Y) and RGB matrix
- insertion possibility of linear RGB signals, e.g. video text, video games, picture-in-picture, camera or slide-scanner
- equal black level for inserted and matrixed signals by clamping
- 3 identical channels for the RGB signals
- linear contrast and brightness control, operating on both the inserted and matrixed RGB signals
- horizontal and vertical blanking (black and ultra-black respectively) and black-level clamping obtained via a 3-level sandcastle pulse
- differential amplifiers with feedback-inputs for stabilization of the RGB output stages
- 2 d.c. gain controls for the green and blue output signals (white point adjustment)
- beam current limiting possibility

QUICK REFERENCE DATA

Supply voltage	$V_{6\text{-}24}$	typ.	12 V
Supply current	I_6	typ.	100 mA
Luminance input signal (peak-to-peak value)	$V_{15\text{-}24(p\text{-}p)}$	typ.	0,45 V
Luminance input resistance	$R_{15\text{-}24}$	typ.	12 kΩ
Colour difference input signals (peak-to-peak values)			
−(B-Y)	$V_{18\text{-}24(p\text{-}p)}$	typ.	1,33 V
−(R-Y)	$V_{17\text{-}24(p\text{-}p)}$	typ.	1,05 V
Inserted RGB signals (peak-to-peak values)	$V_{12,13,14\text{-}24(p\text{-}p)}$	typ.	1 V
Three-level sandcastle pulse detector	$V_{10\text{-}24}$	typ.	2,5/4,5/8,0 V
Control voltage ranges			
brightness	$V_{20\text{-}24}$		1 to 3 V
contrast	$V_{19\text{-}24}$		2 to 4 V
saturation	$V_{16\text{-}24}$		2,1 to 4 V

PACKAGE OUTLINE

28-lead DIL; plastic (SOT117).

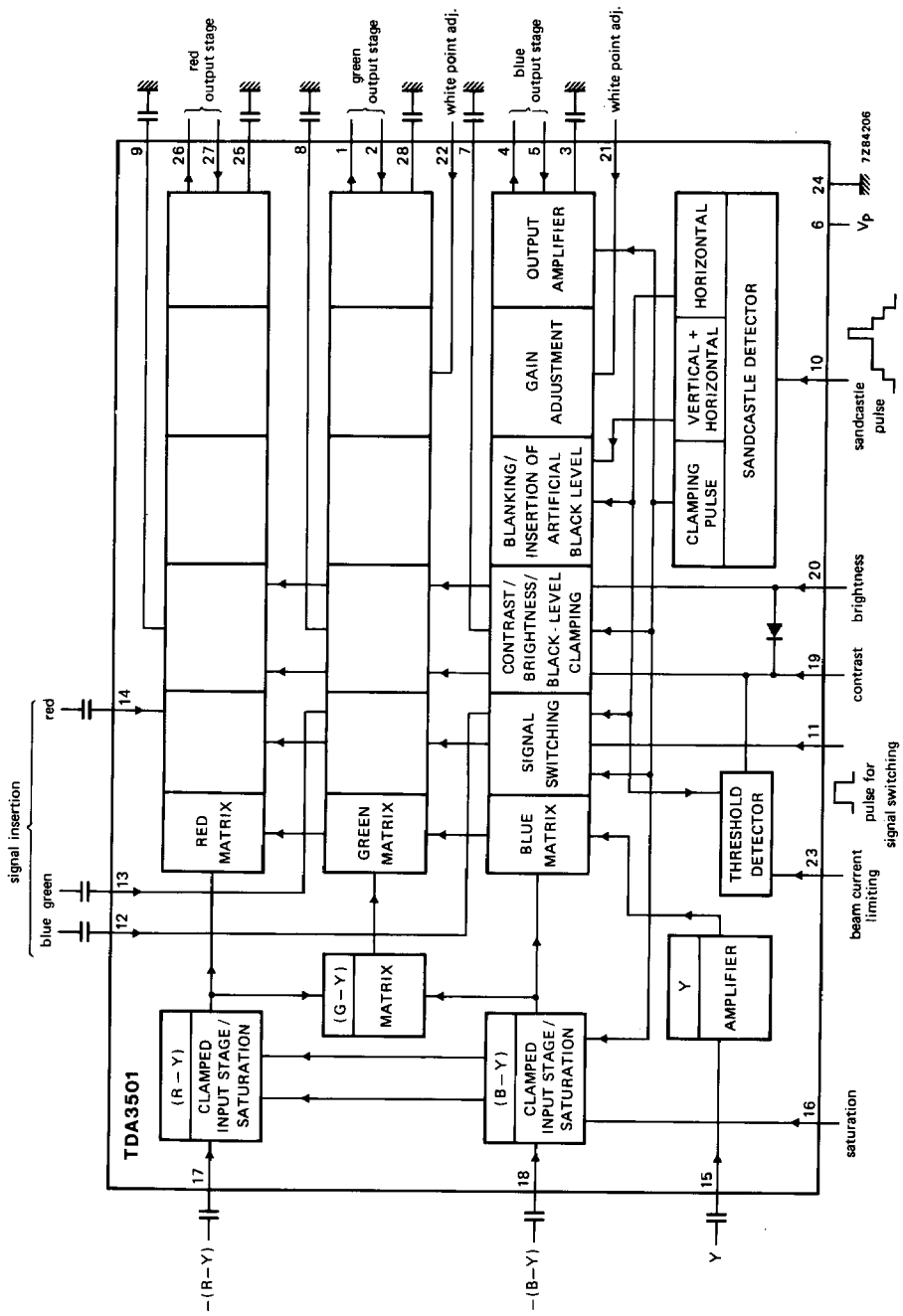

Fig. 1 Block diagram.

RATINGS

Limiting values in accordance with the Absolute Maximum System (IEC 134)

		min.	max.	
Supply voltage	$V_P = V_{6-24}$	–	13,2	V
Voltages with respect to pin 24				
pins 1,4,26	$V_{1,4,26-24}$	½V_P	V_P + 1	V
pins 2,5,27	$V_{2,5,27-24}$	0	V_P	V
pin 10	V_{10-24}	0	V_P	V
pin 11	V_{11-24}	–0,5	3	V
pins 16,19,20	$V_{16,19,20-24}$	0	½V_P	V
pins 21,22	$V_{21,22-24}$	0	V_P	V
pin 23	V_{23-24}	0	V_P	V
pins 3,25,28; 7,8,9; 12,13,14; 15,17,18	no external d.c. voltage			
Current at pin 20	I_{20}	max.	5	mA
Total power dissipation	P_{tot}	max.	1,7	W
Storage temperature	T_{stg}		–25 to + 125	°C
Operating ambient temperature	T_{amb}		0 to + 70	°C

CHARACTERISTICS

Supply voltage range	V_P		10,8 to 13,2	V
The following characteristics are measured in Fig. 2; V_P = 12 V; T_{amb} = 25 °C; $V_{18-24(p-p)}$ = 1,33 V; $V_{17-24(p-p)}$ = 1,05 V; $V_{15-24(p-p)}$ = 0,45 V; $V_{12,13,14-24(p-p)}$ = 1 V; unless otherwise specified				
Current consumption	I_6	typ.	100	mA
Colour difference inputs				
–(B-Y) input signal (peak-to-peak value)*	$V_{18-24(p-p)}$		1,33	V
–(R-Y) input signal (peak-to-peak value)*	$V_{17-24(p-p)}$		1,05	V
Internal resistance of colour difference sources		<	200	Ω
Input resistance	$R_{17,18-24}$	>	100	kΩ
Internal d.c. voltage due to clamping	$V_{17,18-24}$	typ.	4,2	V
Saturation control				
control voltage range for a change of saturation from –20 dB to + 6 dB	V_{16-24}		2,1 to 4	V
control voltage for attenuation > 40 dB	V_{16-24}	<	1,8	V
nominal saturation (6 dB below max.)	V_{16-24}	typ.	3	V
input current	I_{16}	<	20	μA

* For saturated colour bar with 75% of maximum amplitude.

CHARACTERISTICS (continued)

(G-Y) matrix			
Matrixed according the equation	$V_{(G-Y)} = -0{,}51\ V_{(R-Y)} - 0{,}19\ V_{(B-Y)}$		
Luminance amplifier			
Input signal (peak-to-peak)	$V_{15\text{-}24(p\text{-}p)}$		0,45 V
Input resistance	$R_{15\text{-}24}$	typ.	12 kΩ
Internal d.c. voltage	$V_{15\text{-}24}$	typ.	2,7 V
RGB channels			
Signal switching input voltage for insertion			
on level	$V_{11\text{-}24}$		0,9 to 1,5 V
off level	$V_{11\text{-}24}$		−0,5 to + 0,3 V
Input current	I_{11}		−100 to + 200 μA
Signal insertion			
external RGB input signal (peak-to-peak value)*	$V_{12,13,14\text{-}24(p\text{-}p)}$		1 V
internal d.c. voltage due to clamping	$V_{12,13,14\text{-}24}$	typ.	3,5 V
input current	$I_{12,13,14}$	<	5 μA
Contrast control			
control voltage range for a change of contrast from −17 dB to + 3 dB	$V_{19\text{-}24}$		2 to 4 V
nominal contrast (3 dB below max.)	$V_{19\text{-}24}$	typ.	3,4 V
control voltage for −6 dB	$V_{19\text{-}24}$	typ.	2,7 V
input current at $V_{23\text{-}24} \geqslant 6$ V	I_{19}	<	2,5 μA
Beam current limiting			
internal d.c. voltage	$V_{23\text{-}24}$	typ.	6 V
input resistance	$R_{23\text{-}24}$	typ.	10 kΩ
input current contrast control			
$V_{23\text{-}24} = 5{,}8$ V	I_{19}	typ.	0,7 mA
$V_{23\text{-}24} = 5{,}7$ V	I_{19}	typ.	10 mA
$V_{23\text{-}24} = 5{,}6$ V	I_{19}	typ.	16 mA
Brightness control			
control voltage range	$V_{20\text{-}24}$		1 to 3 V
nominal brightness voltage	$V_{20\text{-}24}$		2 V
input current	I_{20}	<	10 μA
control voltage for nominal black level which equals the inserted artificial black level	$V_{20\text{-}24}$	typ.	2 V
change of black level in the control range related to the nominal luminance signal (black-white)		typ.	± 50 %

* During the clamping time (see sandcastle detector Fig. 1), the inserted RGB signals are clamped to the same black level as the internal RGB signals. For proper clamping, the internal resistance of the external signal sources should be < 200 Ω.

Internal signal limiting*				
signal limiting for nominal luminance (black to white = 100%)				
black		typ.	−25	%
white		typ.	125	%
White point adjustment				
A.C. voltage gain **				
at $V_{21,22-24}$ = 6 V			100	%
at $V_{21,22-24}$ = 0 V		<	60	%
at $V_{21,22-24}$ = 12 V		>	140	%
Input resistance	$R_{21,22-24}$	typ.	20	kΩ
Differential output amplifier				
Feedback inputs (pins 2,5,27)				
d.c. voltage during clamping	$V_{2,5,27-24}$		5,79 to 5,95	V
voltage difference between the feedback inputs	ΔV	<	80	mV
input resistance	$R_{2,5,27-24}$	>	100	kΩ
Output amplifiers (pins 1,4,26) transconductance	$\frac{\Delta I_1}{\Delta V_{2-24}} = \frac{\Delta I_4}{\Delta V_{5-24}} = \frac{\Delta I_{26}}{\Delta V_{27-24}}$	typ.	20	mA/V
integrated load resistance	$R_{1,4,26-24}$	typ.	610	Ω
output current (peak value) at $V_{1,4,26-24}$ = 8,2 V	$\pm I_{1,4,26\,m}$	typ.	5	mA
Gain data				
At nominal contrast, saturation and white point adjustment				
Voltage gain between Y-input (pin 15) and feedback inputs (pins 2,5,27)	$G_{2,5,27-15}$	typ.	10	dB
Frequency response (0 to 5 MHz)	$d_{2,5,27-15}$	<	3	dB
Voltage gain between colour difference inputs (pins 17 and 18) and feedback inputs (pin 5 and 27)	$G_{5-18} = G_{27-17}$	typ.	0	dB
Frequency response (0 to 2 MHz)	$d_{5-18} = d_{27-17}$	<	3	dB
Voltage gain between signal display inputs (pins 12,13,14) and feedback inputs (pins 2,5,27)	$G_{2-13} = G_{5-12} = G_{27-14}$	typ.	0	dB
Frequency response (0 to 5 MHz)	$d_{2-13} = d_{5-12} = d_{27-14}$	<	3	dB

* Brightness, contrast and saturation control in nominal position.

** With input pins 21 and 22 not connected an internal bias voltage of 6 V is supplied.

CHARACTERISTICS (continued)

Sandcastle detector

There are 3 internal thresholds (proportional to V_P) the following amplitudes are required for separating the various pulses:			
horizontal and vertical blanking pulses (note 1)	V_{10-24}	>	2 V
		<	3 V
horizontal pulse (note 2)	V_{10-24}	>	4 V
		<	5 V
clamping pulse (note 3)	V_{10-24}	>	7,5 V
d.c. voltage for artificial black level (note 4) (scan and flyback)	V_{10-24}	>	7,5 V
no keying	V_{10-24}	<	1 V
Input current	$-I_{10}$	<	100 μA

Notes

1. Blanking to ultra-black (−20%).
2. Insertion of artificial black level.
3. Pulse duration > 3,5 μs.
4. This function will also be obtained by leaving pin 10 open.

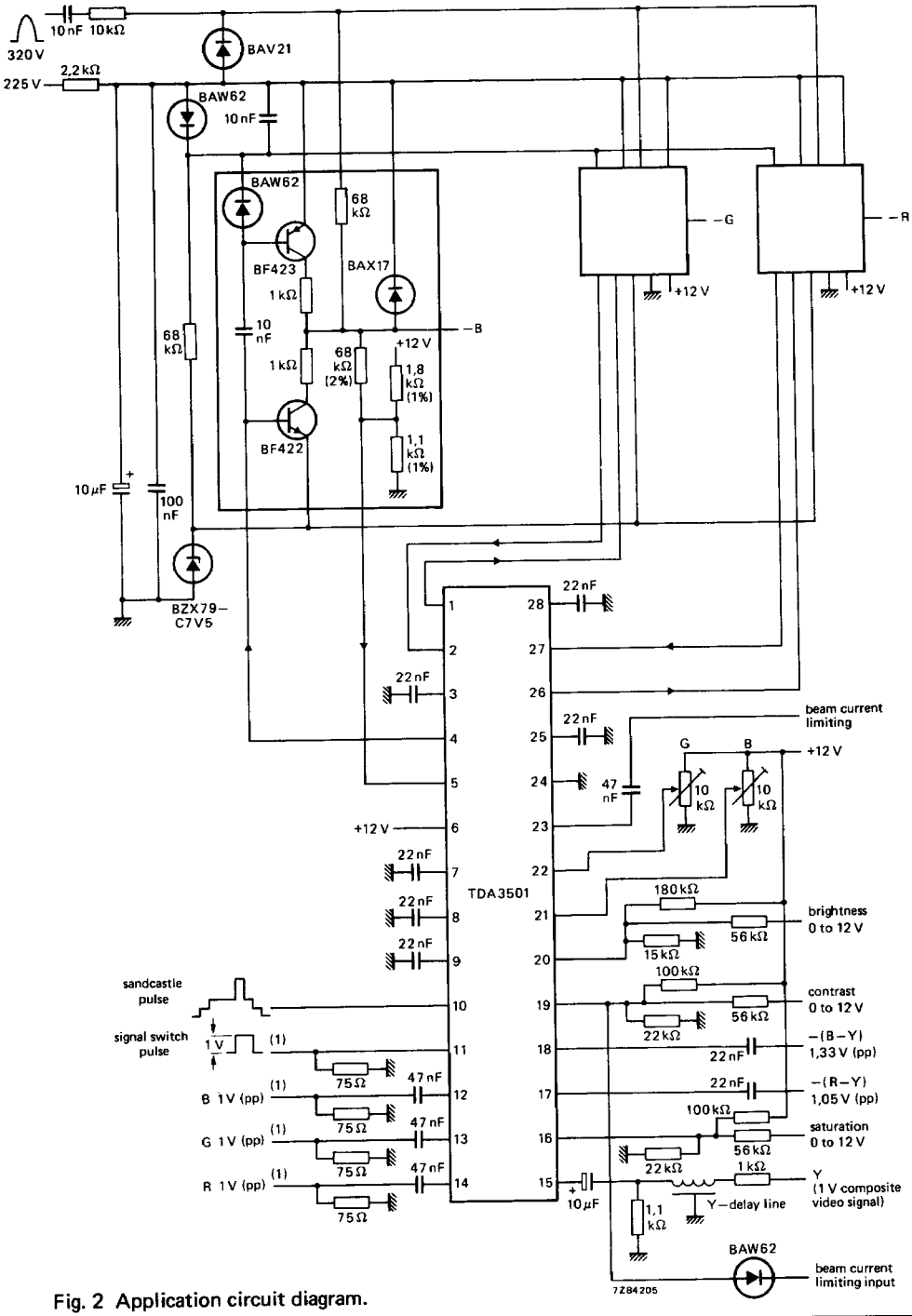

Fig. 2 Application circuit diagram.