DATA SHEET

TDA2545A
Quasi-split-sound circuit

Product specification
File under Integrated Circuits, IC02

February 1985

Philips
Semiconductors

PHILIPS

Quasi-split-sound circuit TDA2545A

GENERAL DESCRIPTION

The TDA2545A is a monolithic integrated circuit for quasi-split-sound processing in television receivers.

Features

- 3-stage gain controlled i.f. amplifier
- A.G.C. circuit
- Reference amplifier and limiter amplifier for vision carrier (V.C.) processing
- Linear multiplier for quadrature demodulation

QUICK REFERENCE DATA

Supply voltage (pin 11)		$V_P = V_{11-13}$	typ.	12	V
Supply current (pin 11)		$I_P = I_{11}$	typ.	45	mA
Minimum i.f. vision carrier input voltage (r.m.s. value)		$V_{VC1-16(rms)}$	typ.	150	μV
Output voltage; 5,5 MHz (r.m.s. value)		$V_{12-13(rms)}$	typ.	100	mV
Output voltage; 5,742 MHz (r.m.s. value)		$V_{12-13(rms)}$	typ.	45	mV
I.F. control range		ΔG_v	typ.	64	dB
Signal-to-weighted-noise (rel. to 1 kHz; 30 kHz deviation)					
at 5,5 MHz	for 2T/20T pulses with white bars	S + W/W	typ.	58	dB
at 5,742 MHz		S + W/W	typ.	56	dB

PACKAGE OUTLINES

16-lead DIL; plastic (SOT38); SOT38-1; 1996 November 19.

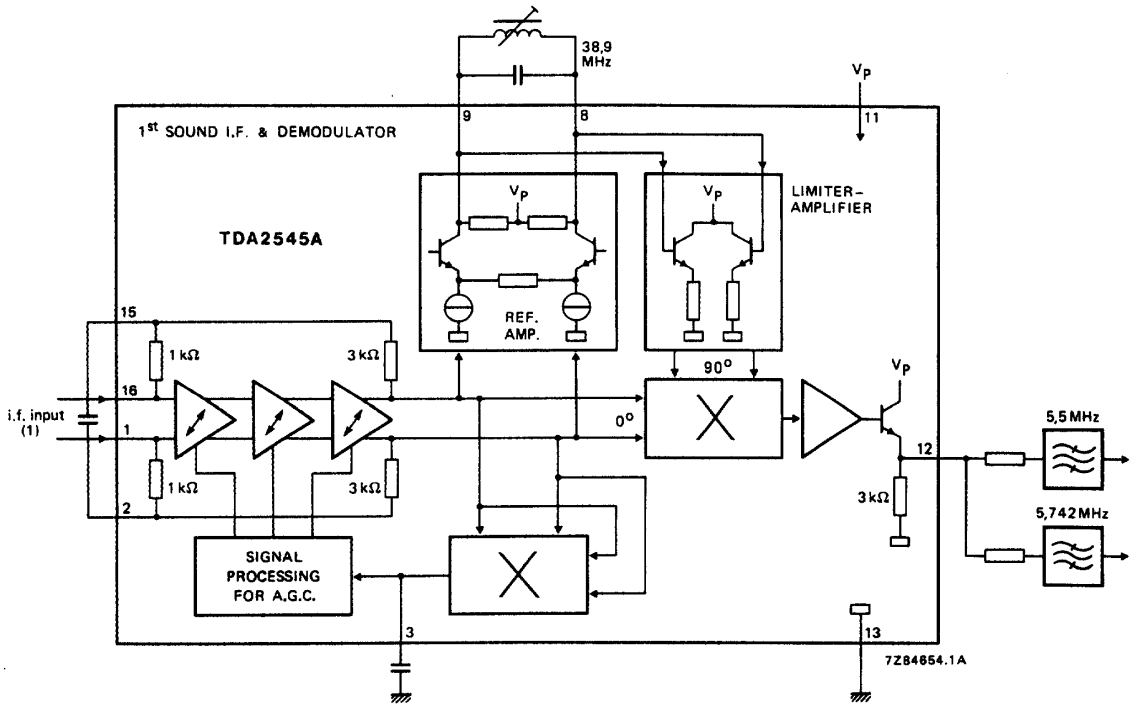

(1) I.F. signal: vision carrier (V.C.) and sound carrier (S.C.).

Fig.1 Block diagram.

RATINGS

Limiting values in accordance with the Absolute Maximum System (IEC 134)

Supply voltage (pin 11)	$V_P = V_{11-13}$	max.		13,2	V
Storage temperature range	T_{stg}	−25	to	+ 150	°C
Operating ambient temperature range	T_{amb}	0	to	+ 70	°C

CHARACTERISTICS

$V_P = V_{11-13}$ = 12 V; T_{amb} = 25 °C; measured at f_{VC} = 38,9 MHz, f_{SC1} = 33,4 MHz, f_{SC2} = 33,158 MHz:
Vision carrier (V.C.) modulated with different video signals (see below); modulation depth 100% (proportional to 10% residual carrier).
Vision carrier amplitude (r.m.s. value) is V_{VC} = 10 mV.
Vision-to-sound carrier ratios are VC/SC1 = 13 dB and VC/SC2 = 20 dB.
Sound carriers (SC1, SC2) modulated with f = 1 kHz and deviation $\Delta f = \pm 30$ kHz.
For measuring circuit see Fig.2; unless otherwise specified.

PARAMETER	SYMBOL	MIN.	TYP.	MAX.	UNIT
Supply (pin 11)					
Supply voltage	$V_P = V_{11-13}$	10,8	12	13,2	V
Supply current	$I_P = I_{11}$	33	45	55	mA
I.F. amplifier					
Input voltage for start of gain control (intercarrier signals –3 dB)	$V_{VC1-16(rms)}$	–	150	200	μV
Input voltage for end of gain control (intercarrier signals + 1 dB)	$V_{VC1-16(rms)}$	100	250	–	mV
I.F. gain control range	ΔG_v	60	64	–	dB
Control voltage range (see Fig.3)	V_{3-13}	4	–	V_p	V
Input resistance	R_{1-16}	–	2,5	–	kΩ
Input capacitance	C_{1-16}	–	1,5	–	pF
Intercarrier generation					
Output voltage; 5,5 MHz (r.m.s. value)	$V_{12-13(rms)}$	60	100	140	mV
Output voltage; 5,742 MHz (r.m.s. value)	$V_{12-13(rms)}$	27	45	63	mV
D.C. output voltage	V_{12-13}	–	5,9	–	V
Allowable d.c. load resistance at the output	R_{12-13}	7	–	–	kΩ
Allowable output current	$-I_{12}$	–	–	1	mA
Intercarrier signal-to-noise (see note 1) (measured behind the FM demodulators) weighted according to CCIR 468-2, quasi-peak					
a. 2T/20T pulses with white bars (see also Fig.4)					
at 5,5 MHz	S+W/W	53	58	–	dB
at 5,742 MHz	S+W/W	51	56	–	dB
b. 6 kHz sinewave					
at 5,5 MHz	S+W/W	50	53	–	dB
at 5,742 MHz	S+W/W	50	53	–	dB
c. black level (sync pulses only)					
at 5,5 MHz	S+W/W	60	65	–	dB
at 5,742 MHz	S+W/W	58	63	–	dB

Note

1. Incidental phase on the vision carrier, caused by TV transmitter, has to be less than 0,5 degrees for black to white transient (equivalent to S+W/W = 56 dB for 6 kHz sinewave).

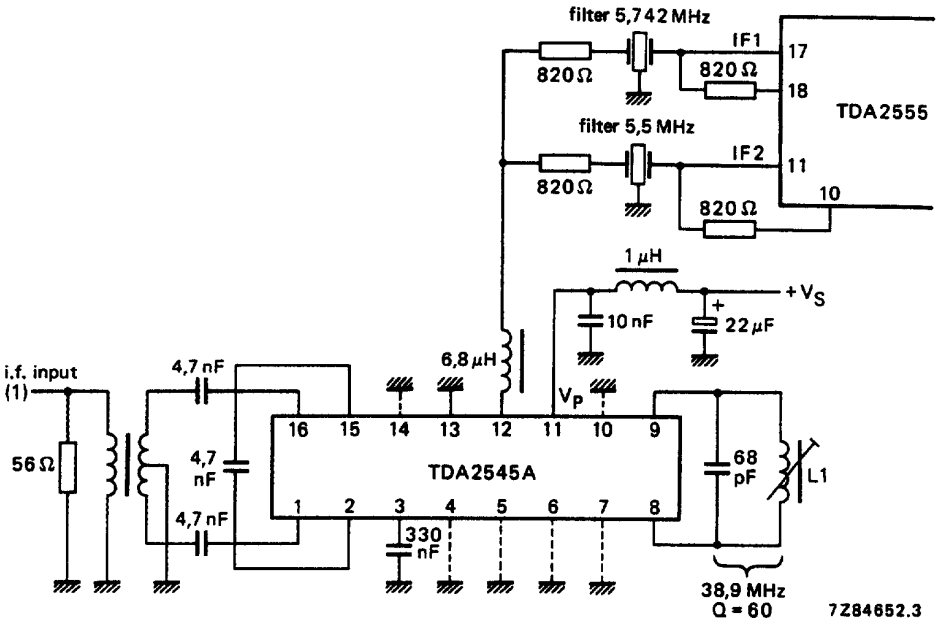

Fig.2 Measuring circuit for TDA2545A.

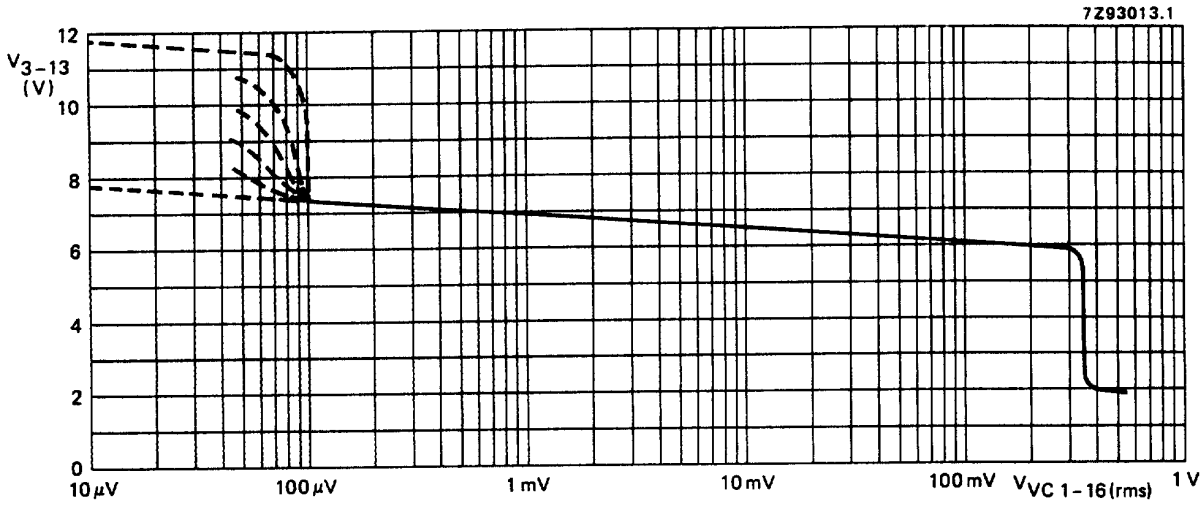

Fig.3 Control voltage at pin 3 as a function of the input voltage $V_{VC1\text{-}16(rms)}$.

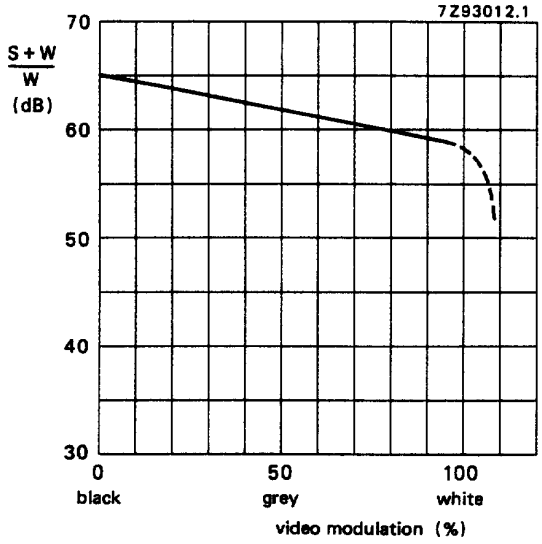

Fig.4 Signal-to-weighted-noise ratio depending on video modulation.

PACKAGE OUTLINES

DIP16: plastic dual in-line package; 16 leads (300 mil); long body SOT38-1

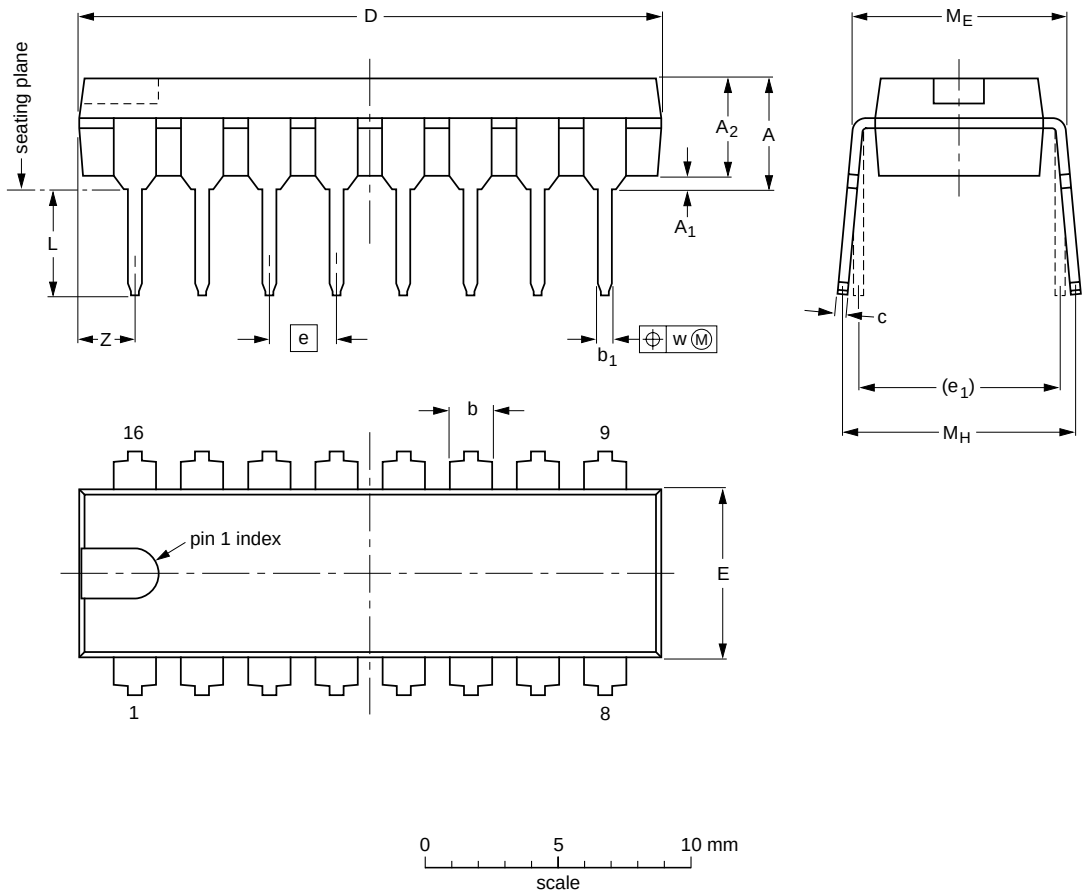

DIMENSIONS (inch dimensions are derived from the original mm dimensions)

UNIT	A max.	A_1 min.	A_2 max.	b	b_1	c	D (1)	E (1)	e	e_1	L	M_E	M_H	w	Z (1) max.
mm	4.7	0.51	3.7	1.40 1.14	0.53 0.38	0.32 0.23	21.8 21.4	6.48 6.20	2.54	7.62	3.9 3.4	8.25 7.80	9.5 8.3	0.254	2.2
inches	0.19	0.020	0.15	0.055 0.045	0.021 0.015	0.013 0.009	0.86 0.84	0.26 0.24	0.10	0.30	0.15 0.13	0.32 0.31	0.37 0.33	0.01	0.087

Note

1. Plastic or metal protrusions of 0.25 mm maximum per side are not included.

OUTLINE VERSION	REFERENCES				EUROPEAN PROJECTION	ISSUE DATE
	IEC	JEDEC	EIAJ			
SOT38-1	050G09	MO-001AE				~~92-10-02~~ 95-01-19

SOLDERING

Introduction

There is no soldering method that is ideal for all IC packages. Wave soldering is often preferred when through-hole and surface mounted components are mixed on one printed-circuit board. However, wave soldering is not always suitable for surface mounted ICs, or for printed-circuits with high population densities. In these situations reflow soldering is often used.

This text gives a very brief insight to a complex technology. A more in-depth account of soldering ICs can be found in our *"IC Package Databook"* (order code 9398 652 90011).

Soldering by dipping or by wave

The maximum permissible temperature of the solder is 260 °C; solder at this temperature must not be in contact with the joint for more than 5 seconds. The total contact time of successive solder waves must not exceed 5 seconds.

The device may be mounted up to the seating plane, but the temperature of the plastic body must not exceed the specified maximum storage temperature ($T_{stg\ max}$). If the printed-circuit board has been pre-heated, forced cooling may be necessary immediately after soldering to keep the temperature within the permissible limit.

Repairing soldered joints

Apply a low voltage soldering iron (less than 24 V) to the lead(s) of the package, below the seating plane or not more than 2 mm above it. If the temperature of the soldering iron bit is less than 300 °C it may remain in contact for up to 10 seconds. If the bit temperature is between 300 and 400 °C, contact may be up to 5 seconds.

DEFINITIONS

Data sheet status	
Objective specification	This data sheet contains target or goal specifications for product development.
Preliminary specification	This data sheet contains preliminary data; supplementary data may be published later.
Product specification	This data sheet contains final product specifications.
Limiting values	
Limiting values given are in accordance with the Absolute Maximum Rating System (IEC 134). Stress above one or more of the limiting values may cause permanent damage to the device. These are stress ratings only and operation of the device at these or at any other conditions above those given in the Characteristics sections of the specification is not implied. Exposure to limiting values for extended periods may affect device reliability.	
Application information	
Where application information is given, it is advisory and does not form part of the specification.	

LIFE SUPPORT APPLICATIONS

These products are not designed for use in life support appliances, devices, or systems where malfunction of these products can reasonably be expected to result in personal injury. Philips customers using or selling these products for use in such applications do so at their own risk and agree to fully indemnify Philips for any damages resulting from such improper use or sale.