Data Sheet

High-Performance DrMOS

6mm x 6mm x 0.8mm IQFN

TDA21211- Data Sheet

August - 2009

Published by Infineon Technologies AG
http://www.infineon.com/DCDC

Power Management & Drive

Never stop thinking.

6x6 QFN High-Performance DrMOS

Features:

- Intel compliant DrMOS, Power MOSFET and Driver in one package
- For Synchronous Buck - step down voltage applications
- Maximum Average Current of 35A
- Wide input voltage range +5V to +30V
- Low power dissipation
- Extremely fast switching technology for improved performance at high switching frequencies (>1MHz)
- Remote Driver Disable function
- Switching Modulation (SMOD#) of low side MOS
- Includes active PMOS structure as integrated bootstrap circuit for reduced part count
- Shoot through protection
- +5V High and Low Side Driving voltage
- Compatible to standard PWM controller ICs with +3.3 and 5V logic
- Three-State PWM input functionality
- Small Package: IQFN40 (6 x 6 x 0.8 mm^3)
- RoHS Compliant



Type	Package	Marking
TDA21211	6x6x0.8mm^3 PG-IQFN-40-1	TDA21211

Applications:

- Desktop and Server VR11.X and VR12 Vcore and non-Vcore buck-converters
- Network and Telecom processor VR
- Single Phase and Multi-Phase POL
- CPU/GPU Regulation in Notebook, Graphics Cards, and Gaming
- Voltage Modules requiring high power density
- Memory (DDR2/3)

Pinout

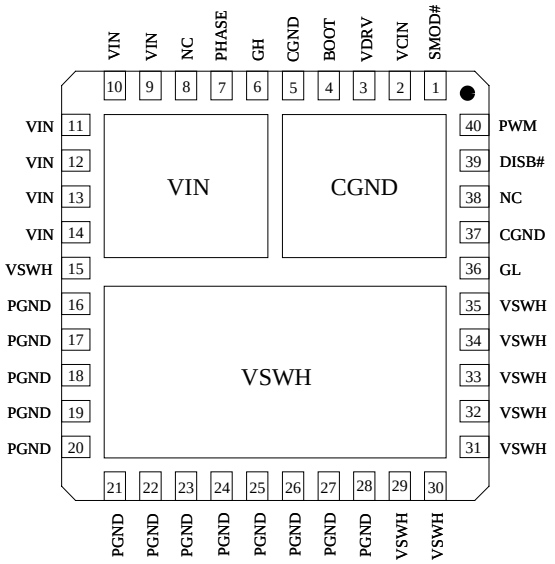

Note:
Signals marked with "#" at the end are active low signals.

Figure 1. Pinout, numbering and name of pins (Transparent Top View)

Pin Description

Pin Name	Pin No.	Description	Remarks
CGND	5, 37,CGND Pad	Control signal ground	Should be connected to PGND externally
SMOD#	1	Low side gate disable pin	when SMOD# is “low” the GL is OFF
VCIN	2	Logic supply voltage	5V bias voltage for the internal logic.
VDRV	3	FET gate supply voltage	High & Low Side gate drive 5V
BOOT	4	Bootstrap voltage pin	Connect to boot capacitor
GH	6	High side gate signal	pin for monitoring gate of HS FET
PHASE	7	Switch node output	Internally connected to VSWH pin
NC	8, 38	No connect	Can be connected to any potential
VIN	9 to 14, Vin Pad	Input Voltage	connection to the drain of the HS FET
VSWH	15, 29 to 35, VSWH Pad	Switch node output	high current output switch node
PGND	16 to 28	Power ground	All of these pins must be connected to the power GND plane through multiple, low inductance vias.
GL	36	Low side gate signal	pin for monitoring gate of LS FET
DISB#	39	Disable Signal (active low)	pull to GND to disable the IC
PWM	40	PWM drive logic input	the three-state PWM input is compatible with 3.3V and 5V logic

General Description

The Infineon TDA21211 is a multichip module that incorporates Infineon's premier MOSFET technology for a single high side and a single low side MOSFET coupled with a robust, high performance, high switching frequency gate driver in a single 40 pin QFN package. The optimized gate timing allows for significant light load efficiency improvements over discrete solutions. State of the art MOSFET technology provides exceptional full load performance. Thus this device has a clear advantage over exisiting approaches in the marketplace when both full load and light load efficiencies are important.

The Driver+MOSFET IC TDA21211 (DrMOS) is pin to pin compatible and compliant with the Intel 6x6 DrMOS specification. The device package height is only 0.8mm, and is an excellent choice for applications with critical height limitations.

BLOCK DIAGRAM

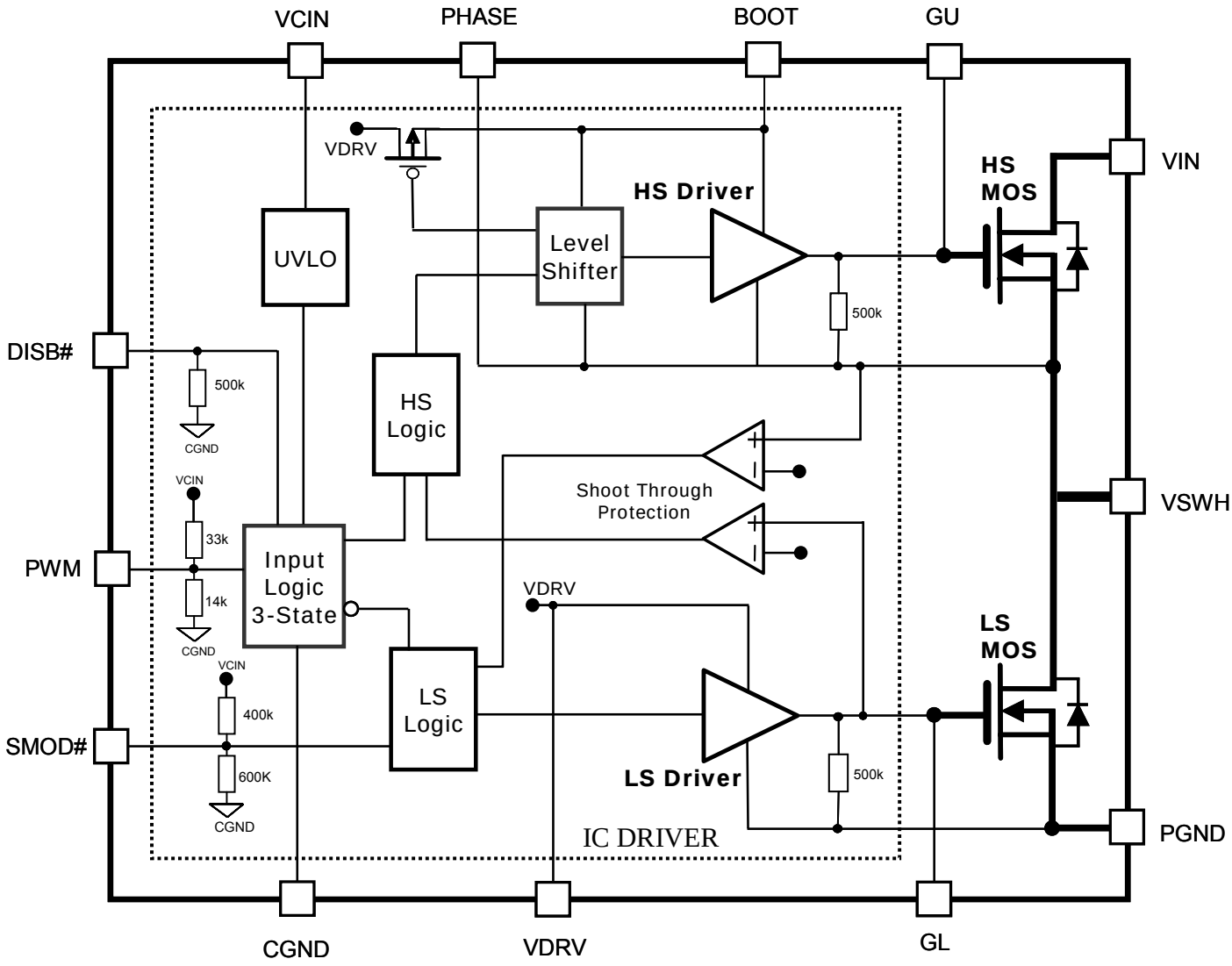

Figure 2. Simplified block diagram

Electrical Specification Table

Absolute Maximum Ratings (Ta = 25°C)

Item	Symbol	Rating	Units
Frequency	f_{SW}	1.2	MHz
Average output current	Iout	35	A
Input voltage	VIN (DC)	-0.3 to +30	V
Supply voltage	VCIN (DC)	-0.3 to +5.5	V
High and Low side driver voltage	VDRV (DC)	-0.3 to +5.5	V
Switch node voltage	VSWH (DC)	-1 to +30	V
BOOT voltage	$V_{BOOT-PHASE}$ (DC)	-1 to +5.5	V
SMOD# voltage	$V_{SMOD\#}$ (DC)	-0.3 to +5.5	V
DISB# voltage [1]	VDISB	-0.3 to +5.5	V
PWM voltage [1]	Vpwm	-0.3 to +5.5	V
Operating junction temperature	Tj-opr	-40 to +150	°C
Storage temperature	Tstg	-55 to +150	°C

Note: All rated voltages are relative to voltages on the CGND and PGND pins unless otherwise specified.

[1] Latch Up class II- Level B (Jedec 78). Please refer to Quality Report for details.

Thermal Characteristics

Parameter	Symbol	Values			Unit
		Min.	Typ.	Max.	
Thermal resistance, junction-soldering point [1]	θ_{JS}		5		K/W
Thermal resistance, junction-top of package	θ_{Jtop}		20		

[1] junction-soldering point is referred to the VSWH bottom exposed pad.

Recommended Operating Conditions and Electrical Characteristics (VCIN = 5V, Ta = 25°C)

Parameter		Symbol	Min	Typ	Max	Units	Test Conditions
Input Voltage		VIN	5		25	V	
Driving Voltage		VDRV		5			
Bias Supply Voltage		VCIN	4.5	5	5.5		
UVLO Rising		V_{UVLO_R}	2.9	3.5	3.9		VCIN rising
UVLO Falling		V_{UVLO_F}	2.5	3.1	3.3		VCIN falling
Driver Current		I_{VDRV_300kHz}		10		mA	DISB# = 5V, f_{SW} = 300kHz
		I_{VDRV_PWML}		25		µA	DISB# = 5V, PWM = 0V
IC Current (Control)		I_{VCIN_PWML}		250		µA	DISB# = 5V, PWM = 0V SMOD# = Open
		I_{VCIN_O}		370		µA	DISB# = 5V, PWM = Open SMOD# = Open
IC quiescent		$I_{CIN}+I_{DRV}$			270	µA	DISB# = 0V
Logic Inputs and Thresholds							
DISB#	Input low	V_{DISB_L}	0.7	1.1	1.3	V	V_{DISB} falling
	Input high	V_{DISB_H}	1.9	2.1	2.4		V_{DISB} rising
	Sink Current	I_{DISB}		2		µA	V_{DISB} = 1V
SMOD#	Input low	$V_{SMOD\#_L}$	0.7	1.1	1.3	V	$V_{SMOD\#}$ falling
	Input high	$V_{SMOD\#_H}$	1.9	2.1	2.4		$V_{SMOD\#}$ rising
	Open Voltage	$V_{SMOD\#_O}$		3.0			
	Sink Current	$I_{SMOD\#}$		-8		µA	$V_{SMOD\#}$ = 1V
PWM	Input low	V_{PWM_L}			0.7	V	V_{PWM} falling
	Input high	V_{PWM_H}	2.4				V_{PWM} rising
	Input resistance	R_{IN-PWM}	6.5	9.5	12.5	kΩ	V_{PWM} = 1V
	Open Voltage	V_{PWM_O}		1.5		V	V_{PWM_O}
	Tri-state Shutdown Window	V_{PWM_S}	1.2		1.9		
Dynamic Characteristic							
Three State to GL/GH rising propagation delay		T_pts		15		ns	GH, GL unloaded.
GL/GH Three State Shutdown Hold-Off time,		T_tsshd		240			
GH Turn-on propagation delay		T_pdhu		15			
GH Turn-off propagation delay		T_pdlu		20			
GL Turn-on propagation delay		T_pdhl		20			
GL Turn-off propagation delay		T_pdll		10			
DISB#Turn-off propogation delay falling		T_pdl_{DISB}		20			
DISB#Turn-on propogation delay rising		T_pdh_{DISB}		20			

[1] Unless otherwise specified, VCIN=VDRV

Typical Application

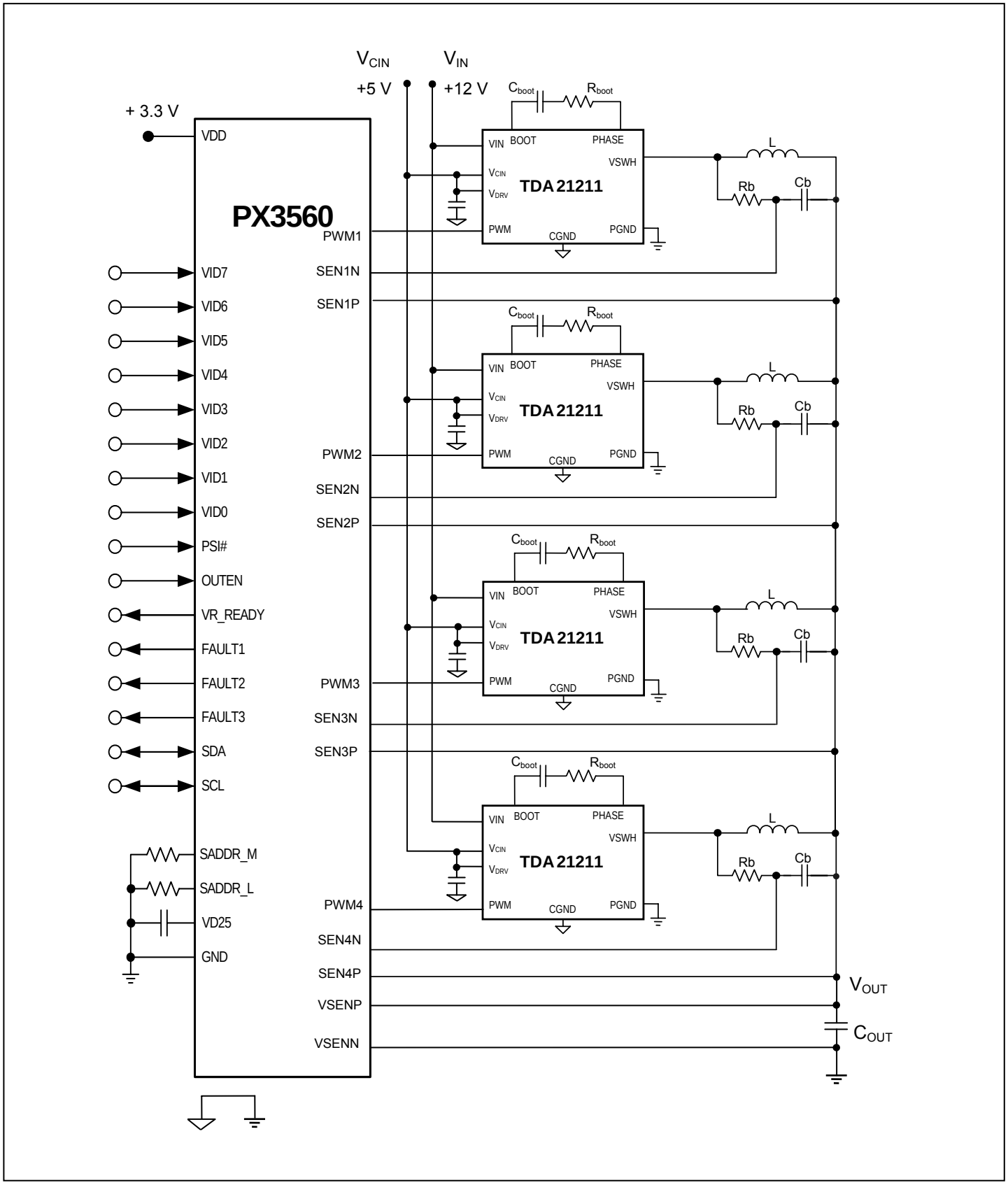

Figure 3. Four Phases Voltage Regulator Typical Application (Simplified Schematic)

Theory of Operation

The TDA21211 incorporates a high performance gate driver, one high side power MOSFET and one low-side power MOSFET in a single 40 lead QFN package. The advantages of this arrangement are found in the areas of increased performance, increased efficiency and lower overall package and layout inductance.This module is ideal for use in Synchronous Buck Regulators either as a stand-alone power stage that can deliver up to 35A or with an interleaved approach for higher current loads.

The power MOSFETs are tailored for this device. The gate driver is an extremely robust high-performance driver rated at the switching node for DC voltages ranging from -1V to +30V. The closely coupled driver and MOSFETs enable efficiency improvements that are hard to match using discrete components. The power density for transmitted power of this approach is approximately 30W within a 36mm^2 area.

Driver Characteristics

The gate driver of the TDA21211 has 2 voltage inputs, VCIN and VDRV. VCIN is the 5V bias supply for the driver. VDRV is also 5V and is used to drive the High and Low Side MOSFETs. Ceramic capacitors should be placed very close to these input voltage pins to decouple the sensitive control circuitry from a noisy environment.

The MOSFETs selected for this application are optimized for 5V gate drive, thus giving the end user optimized high load as well as light load efficiency. The reference for the power circuitry including the driver output stage is PGND and the reference for the gate driver control circuit (VCIN) is CGND.

Referring to the Block Diagram, Figure 2 VCIN is internally connected to the UVLO circuit and for VCIN voltages less than required for proper circuit operation will provide shut-down. VDRV supplies both, the floating high side drive and the low-side drive circuits. An active boot circuit for the high side gate drive is also included. A second UVLO circuitry, sensing the BOOT voltage level, is implemented to prevent false GH turn on during insufficient power supply level condition (BOOT Cap charging/discharging sequence). During undervoltage both GH and GL are driven low actively; further passive pull down (500k Ohm) is placed on each gate.

Note: output signal from UVLO unit.

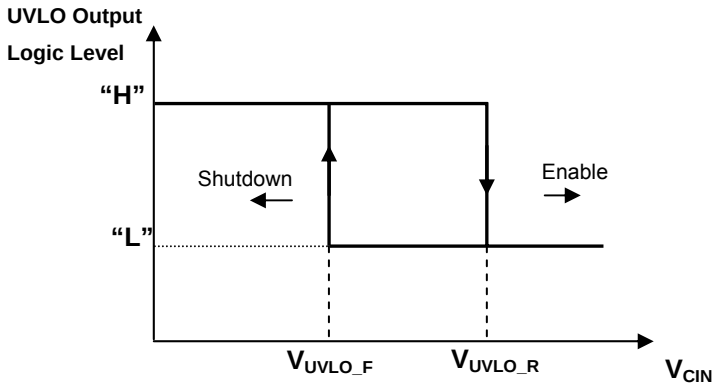

Inputs to the internal control circuit are **PWM**, **DISB#** and **SMOD#**:

The **PWM** is the control input to the IC from an external PWM controller and is compatible with 3.3V and 5V logic.
The PWM input has three-state functionality. When the voltage remains in the specified PWM-shutdown-window for at least the PWM-shutdown-holdoff time T_tsshd, the operation will be suspended by keeping both MOSFET gate outputs low. Once left open, the pin is internally fixed to V_{PWM_O} = 1.5 V level

PWM	Driver Output
L	GL=H, GH = L
H	GL=L, GH = H
Open	GL=L, GH = L

The **DISB#** is an active low signal. When DISB# is pulled low, the power stage is disabled.

DISB#	Driver Output
L	Shutdown → GL, GH = L
H	Enable→ GL, GH = “Active”
Open	Shutdown → GL, GH = L

The **SMOD#** feature is provided to disable the low-side MOSFET during active operation. When synchronized with the PWM signal (as shown in Figure 7), SMOD# is intended to improve light load efficiency by saving the gate charge loss of the low-side MOSFET. Once left open, the pin is internally fixed to $V_{SMOD\#_O}$ = 3 V level.

SMOD#	GL Status
L	L
H	Enable → GL= “Active”
Open	Enable → GL= “Active”

The TDA21211 driver includes gate drive functionality to protect against shoot through. In order to protect the power stage from overlap, both HS and LS MOSFETs being on at the same time, the adaptive control circuitry monitors the voltage at the “VSWH” pin. When the PWM signal goes low, HS, the High-side MOSFET will begin to turn off, after the propagation delay (T_pdlu). Once the “VSWH” pin falls below 1V, LS, the Low-side MOSFET is gated on after the predefined delay time, (T_pdhl). Additionally, the gate to source voltage of the HS-MOSFET is also monitored. When VGS(HS) is discharged below 1V, a threshold known to turn HS off, a secondary delay is initiated, (T_pdhl), which results in LS being gated “ON” irregardless of the state of the “VSWH” pin.This way it will be ensured that the converter can sink current efficiently and the bootstrap capacitor will be refreshed appropriately during each switching cycle. See Figure 5 for more detail.

GH and GL are monitoring pins to check the internal gate drive signals.

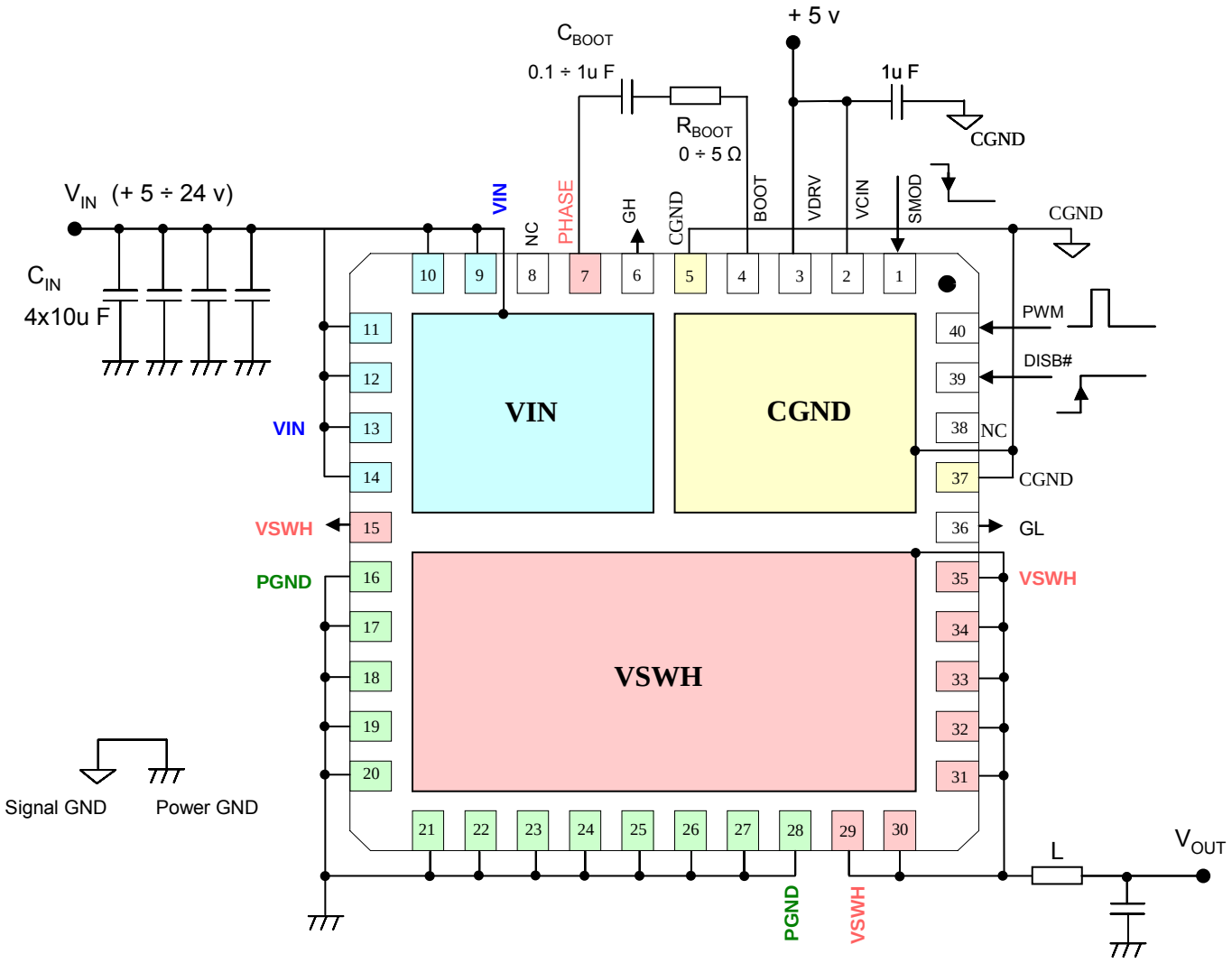

Figure 4. Pin interconnection outline (Transparent Top View)

NOTE: R_{BOOT} value is related to the input voltage level.

Pin **PHASE** is internally connected to **VSWH** node.

Gate Driver Timing Diagrams

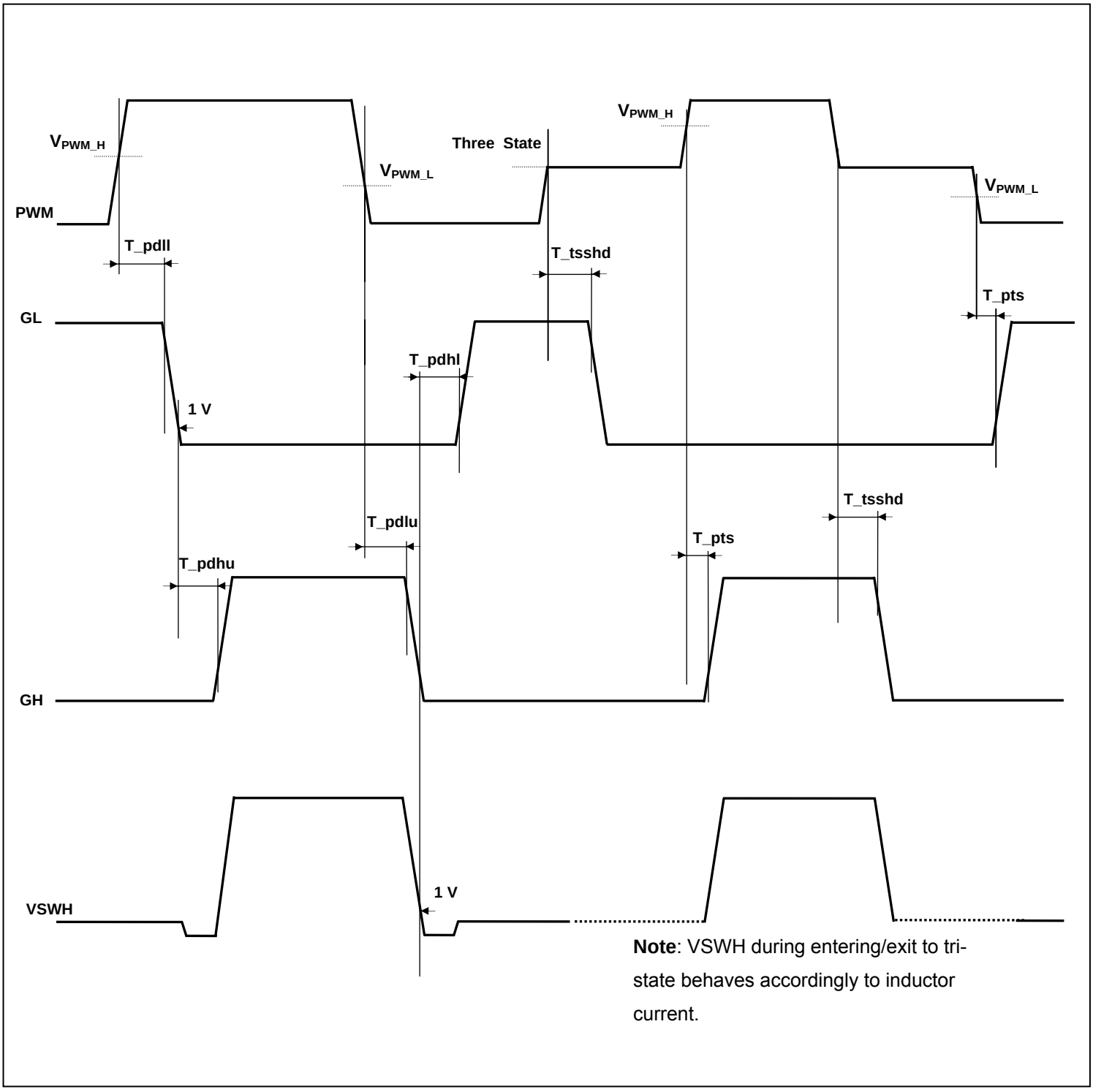

Figure 5: Adaptive Gate Driver Timing Diagram

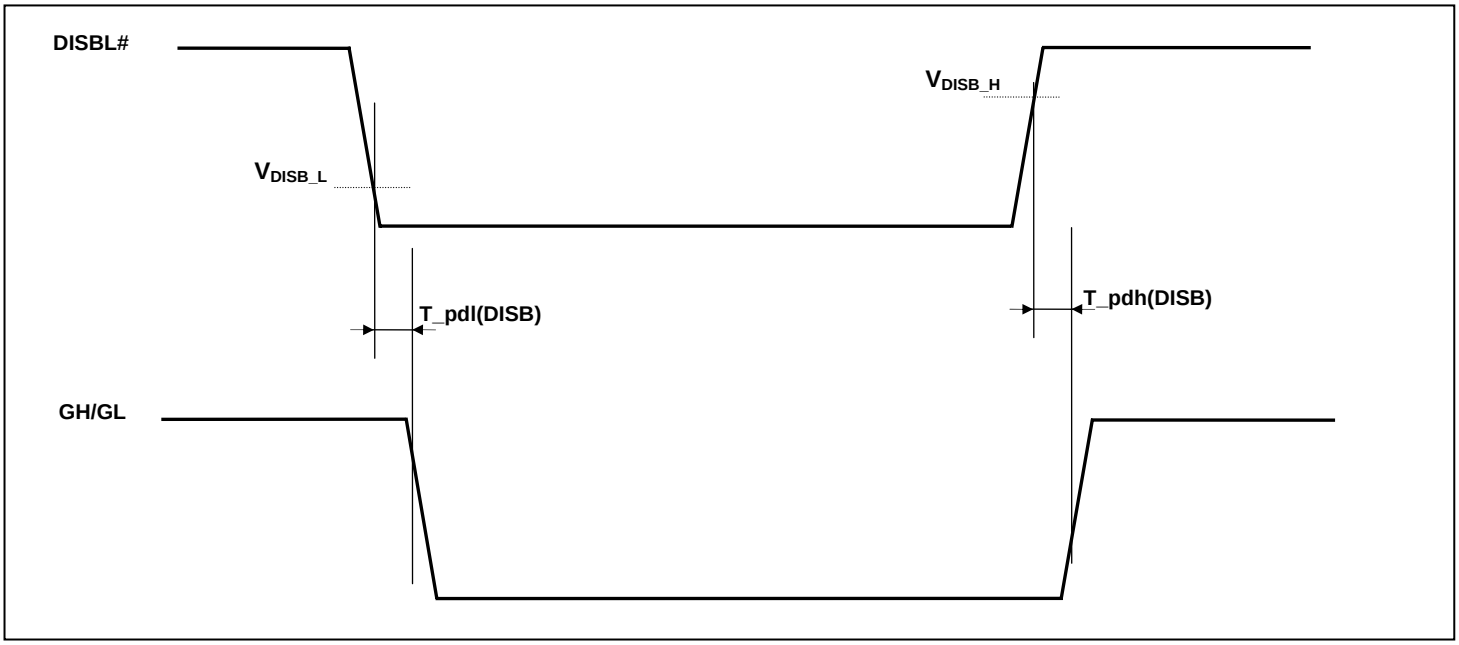

Figure 6: Disable Timing Diagram

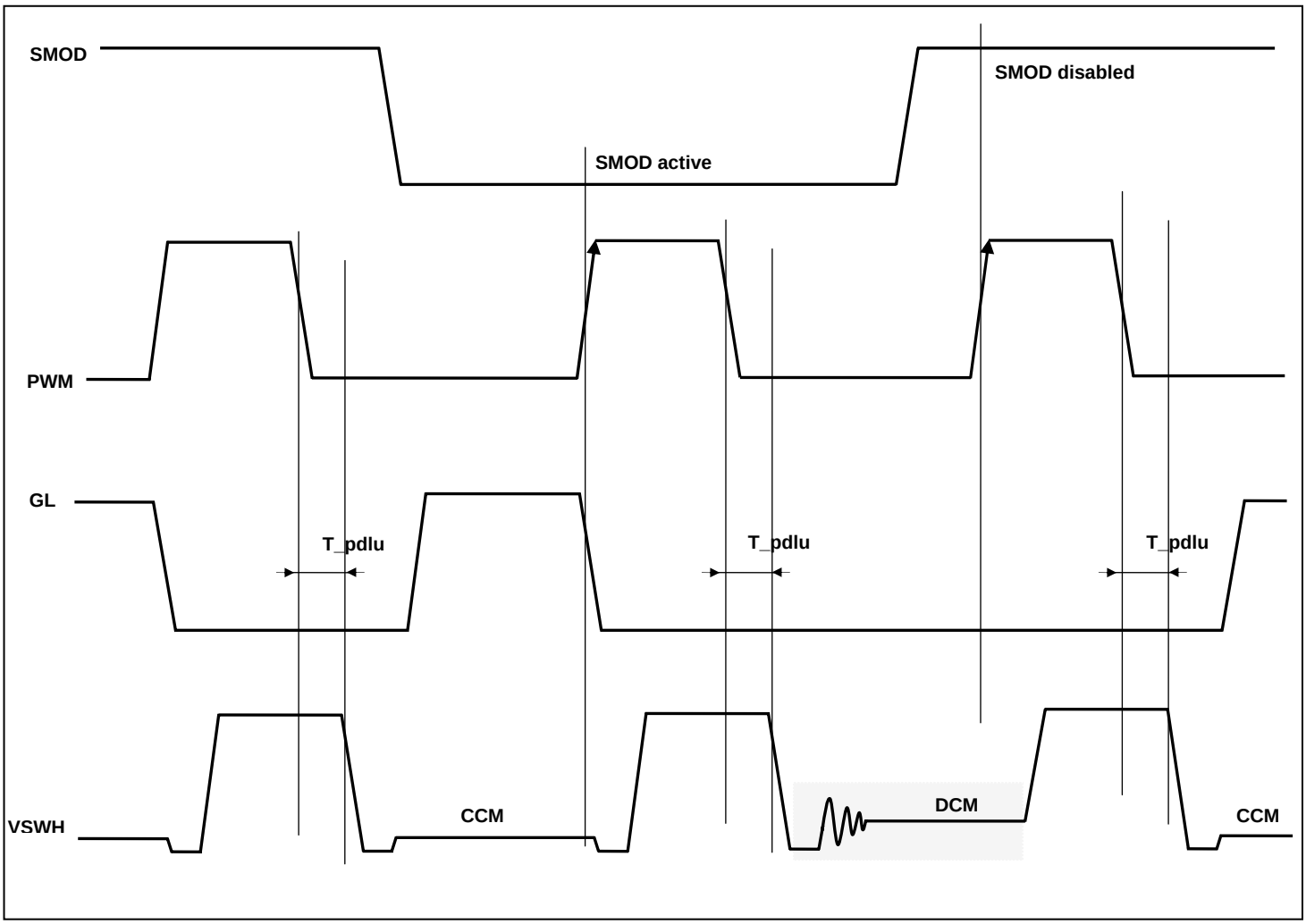

Figure 7 SMOD# Timing Diagram

Test Circuit

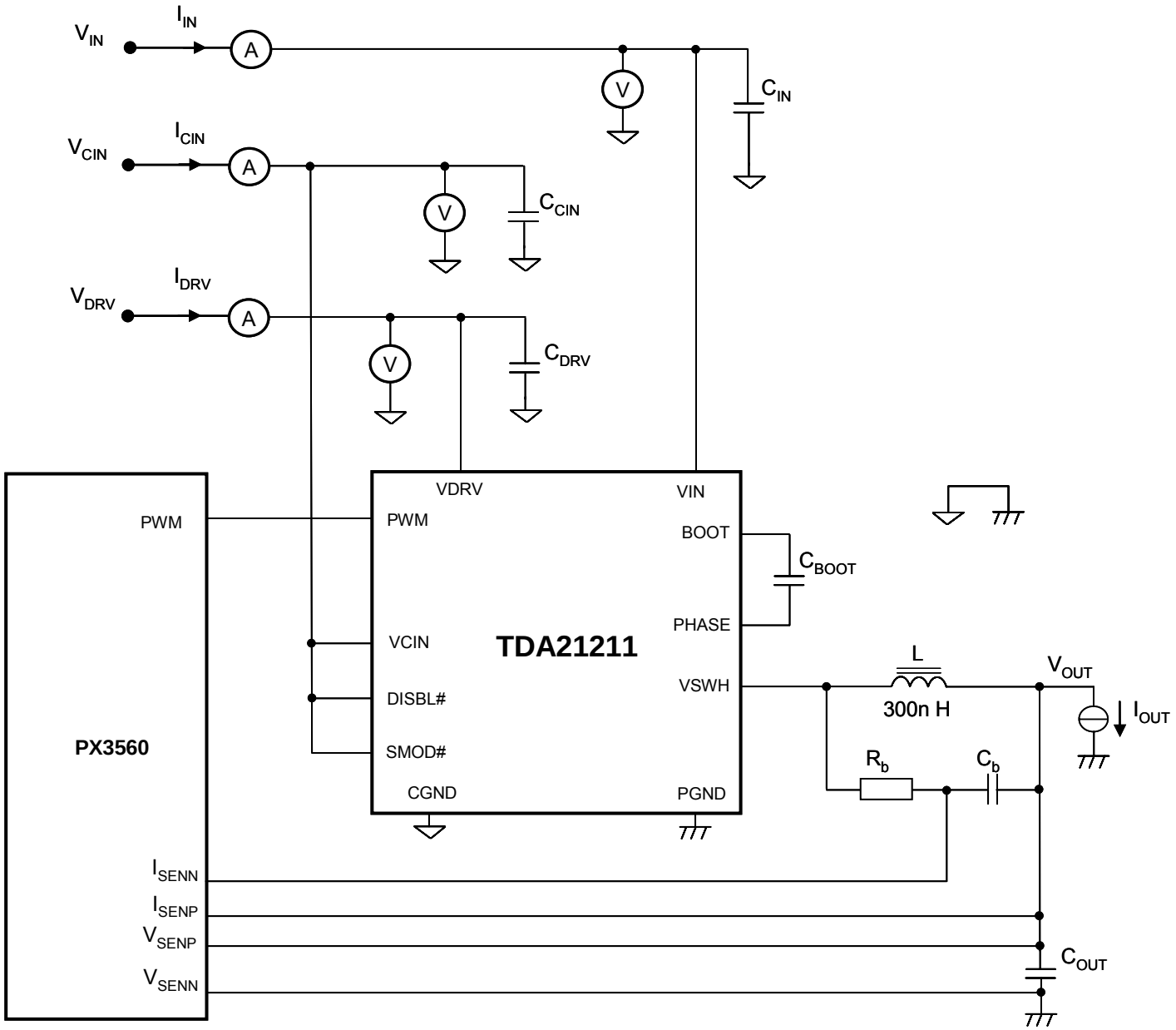

Figure 8. Test Circuit

$$\text{Efficiency} = \frac{P_{OUT}}{P_{IN}}$$

$$P_{IN} = V_{DRV} \times I_{DRV} + V_{CIN} \times I_{CIN} + V_{IN} \times I_{IN}$$

$$P_{OUT} = V_{OUT} \times I_{OUT}$$

$$P_{LOSS} = P_{IN} - P_{OUT}$$

Performance Curves – Typical Data

Operating conditions (unless otherwise specified): V_{IN}= +12V, V_{CIN}=V_{DRV}= +5V, V_{OUT}=1.1 V, F=362k Hz, 300nH inductor (VITEC-59P9081N01, DCR (typ) =0.43m Ω) T_A=25° C, load line=0mΩ, airflow=100 LFM, no heatsink. Power Efficiency and Power Loss data reported herein includes TDA21211 and inductor losses but no other system losses (unless otherwise specified).

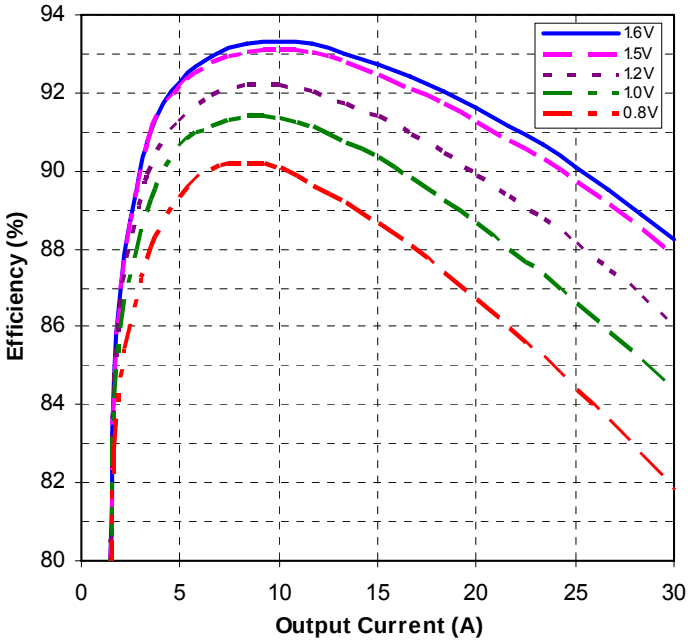

Figure 9. Efficiency vs. VOUT

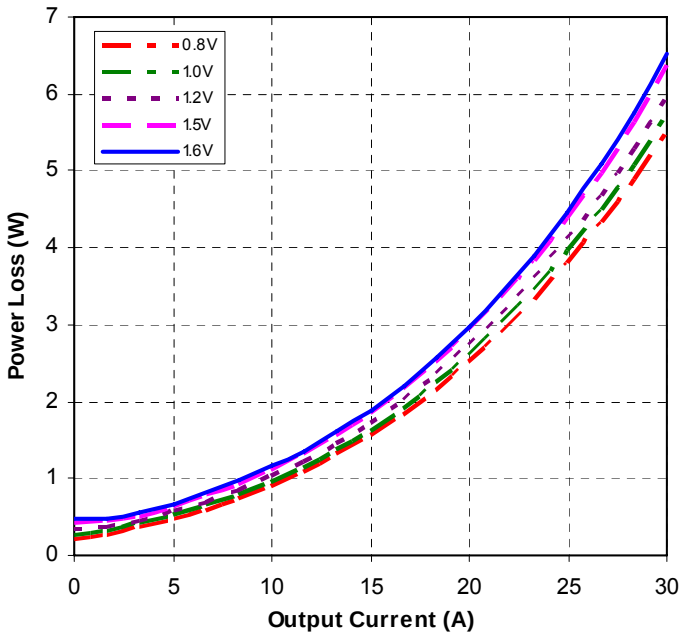

Figure 10. Power Loss vs. VOUT

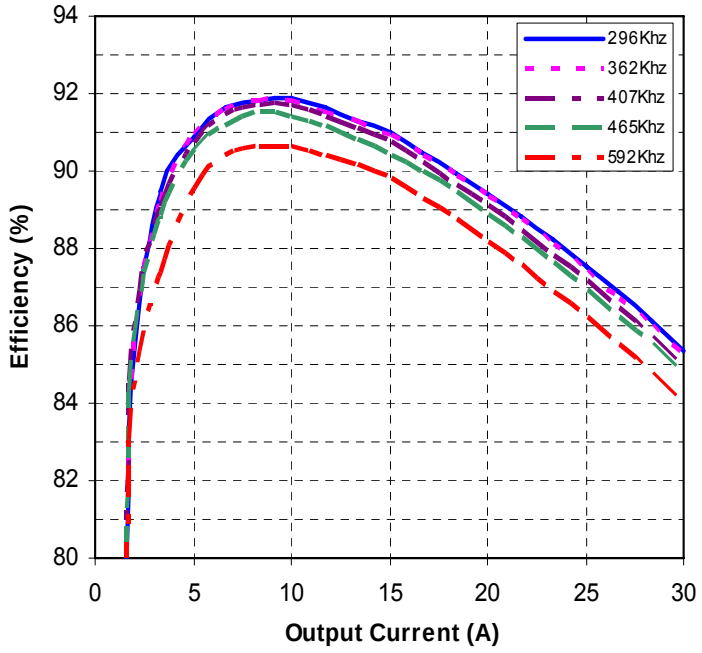

Figure 11. Efficiency vs. Switching Frequency

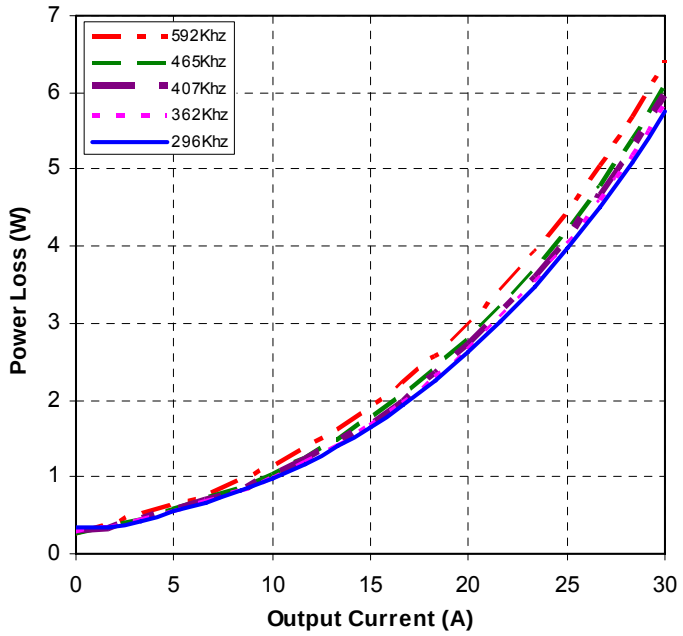

Figure 12. Power Loss vs. Switching Frequency

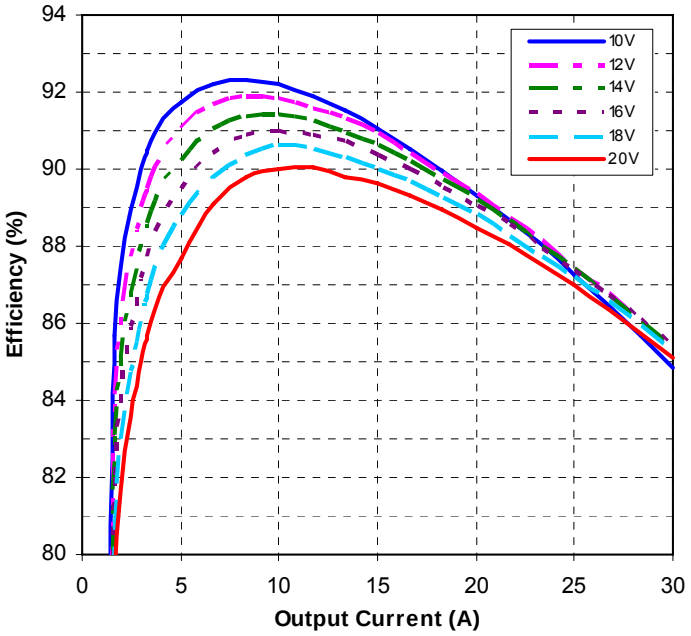

Figure 13. Efficiency vs. VIN

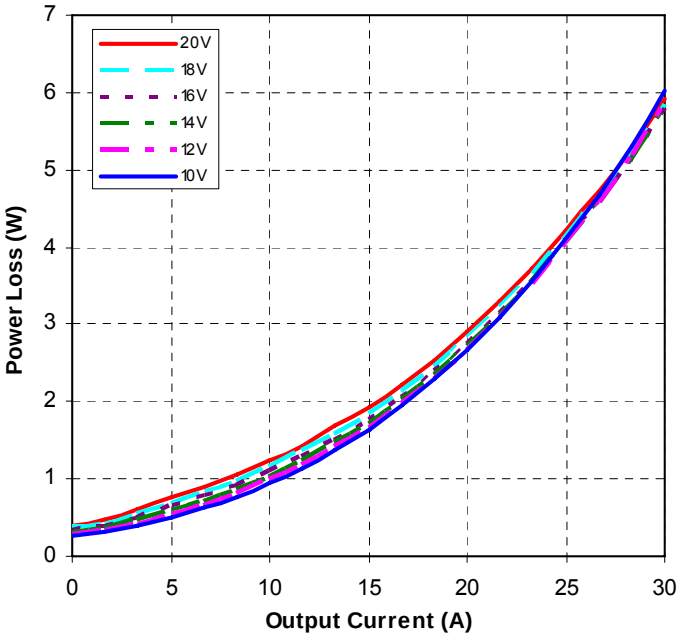

Figure 14. Power Loss vs. VIN

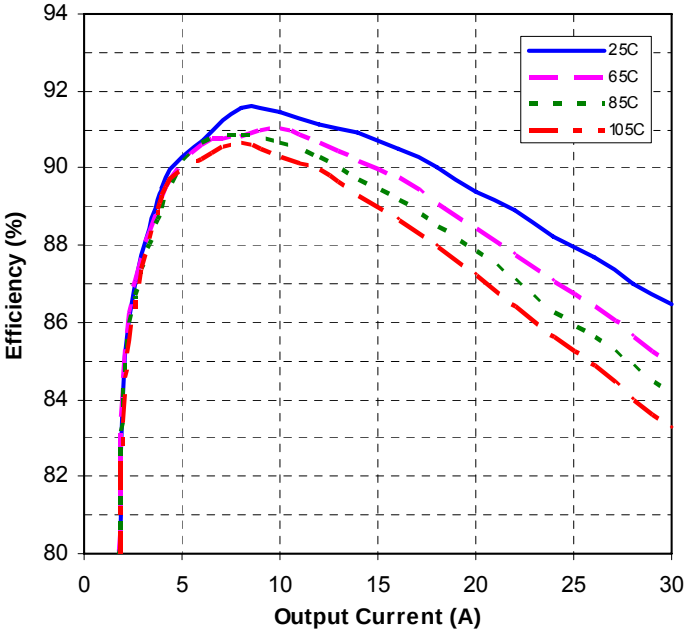

Figure 15. Efficiency vs. T_{CASE}

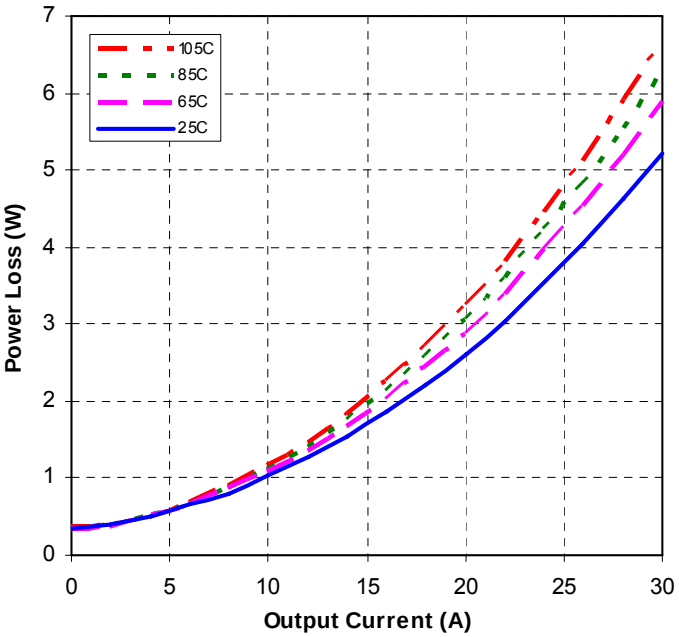

Figure 16. Power Loss vs. T_{CASE}

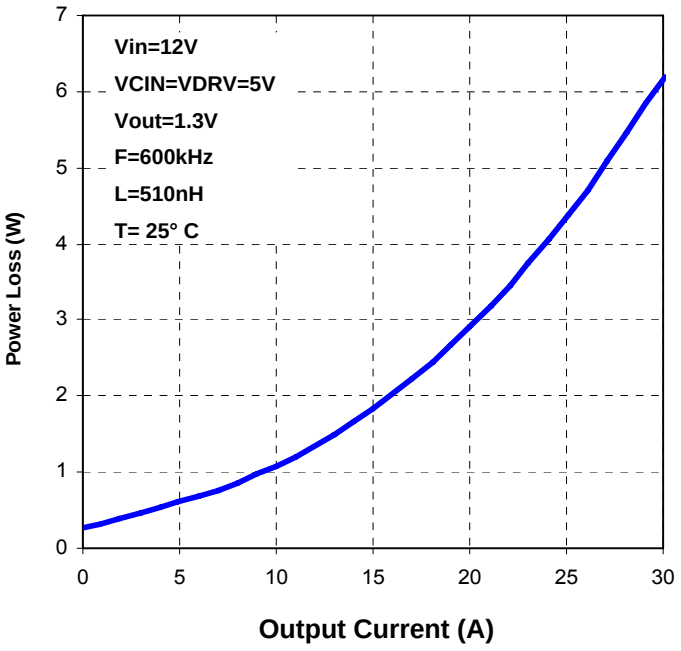

Figure 17. Power Loss vs. Iout (inductor losses not included)

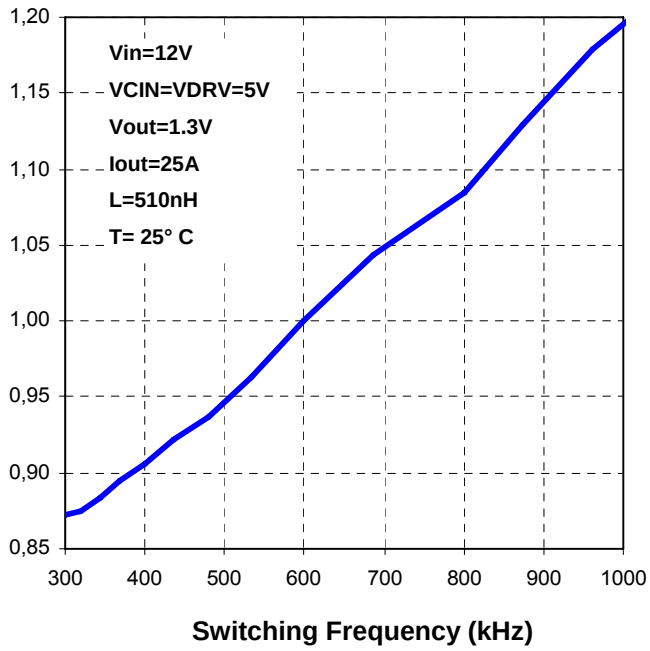

Figure 18. Normalized Power Loss @ Iout=25 A (inductor losses not included)

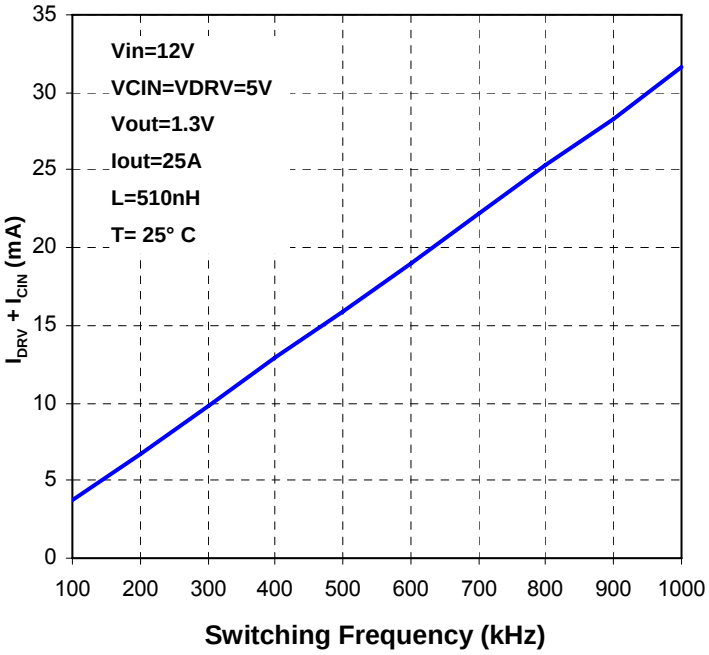

Figure 19. Power Supply Current (IDRV + ICIN) vs. Fsw

Package Outline

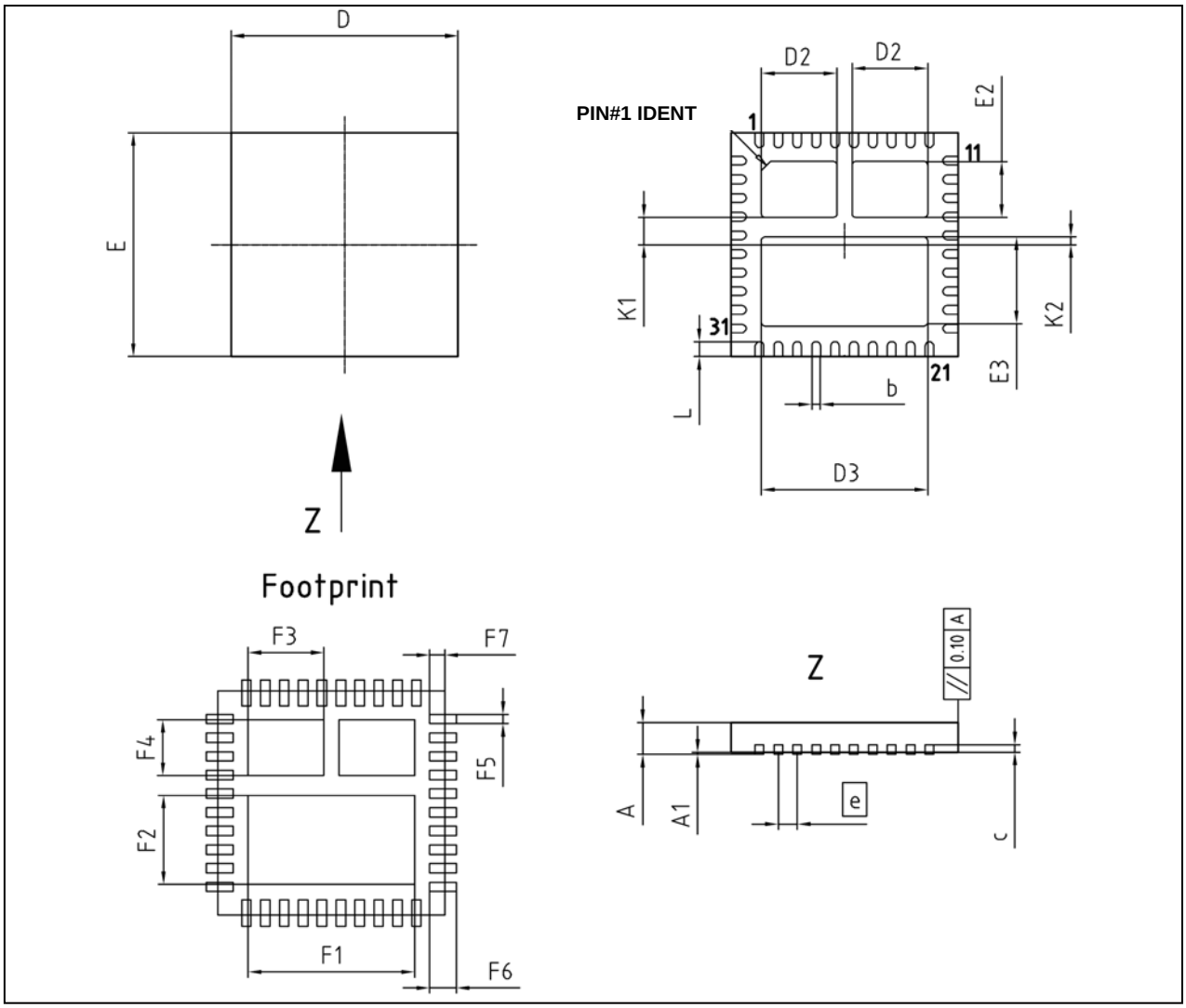

DIM	MILLIMETERS		INCHES	
	MIN	MAX	MIN	MAX
A	0.75	0.85	0.030	0.033
A1	0.00	0.05	0.000	0.002
b	0.18	0.28	0.007	0.011
c	0.10	0.30	0.004	0.012
D	5.90	6.10	0.232	0.240
D2	1.90	2.10	0.075	0.083
D3	4.30	4.50	0.169	0.177
E	5.90	6.10	0.232	0.240
E2	1.40	1.60	0.055	0.063
E3	2.30	2.50	0.091	0.098
e	0.50		0.020	
N	40		40	
L	0.30	0.50	0.012	0.020
K1	0.63	0.83	0.025	0.033
K2	0.11	0.31	0.004	0.012
F1	4.40		0.173	
F2	2.40		0.094	
F3	2.00		0.079	
F4	1.50		0.059	
F5	0.25		0.010	
F6	0.70		0.028	
F7	0.40		0.016	

DOCUMENT NO.
Z8B00137095

SCALE
0
2.5
0 2.5
5mm

EUROPEAN PROJECTION

ISSUE DATE
17-04-2009

REVISION
02

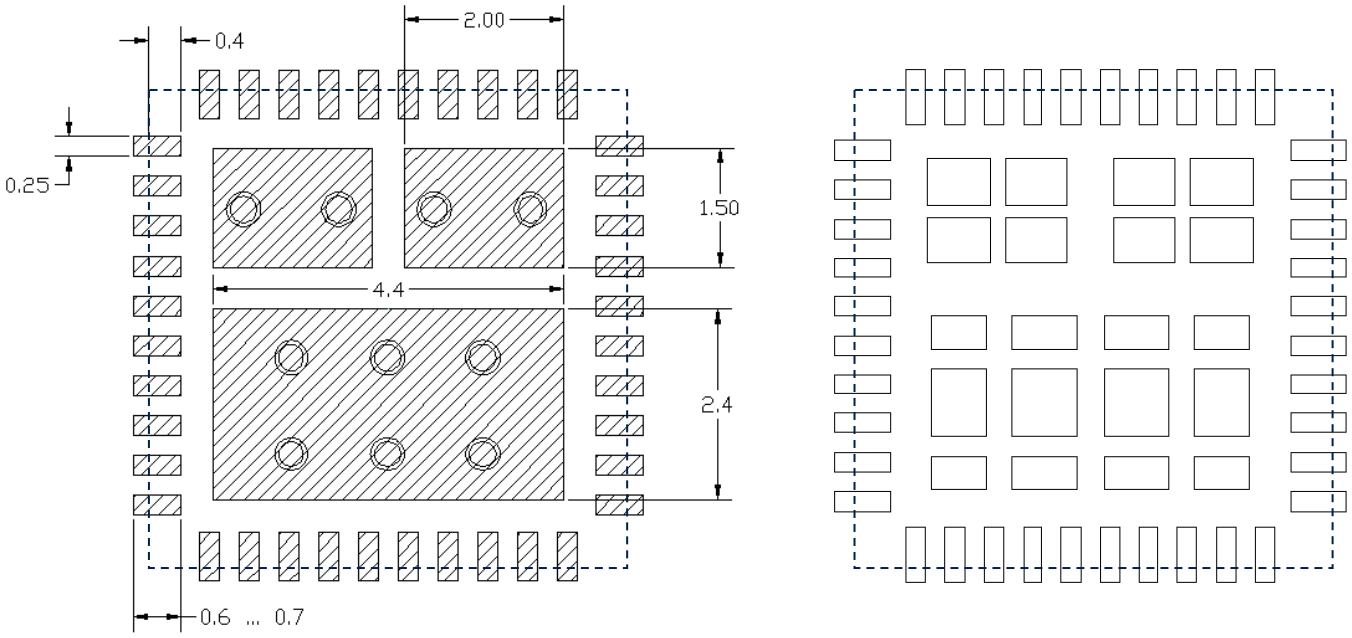

Figure 20: Footprint and Solder Stencil Recommendation

PCB Layout Example.

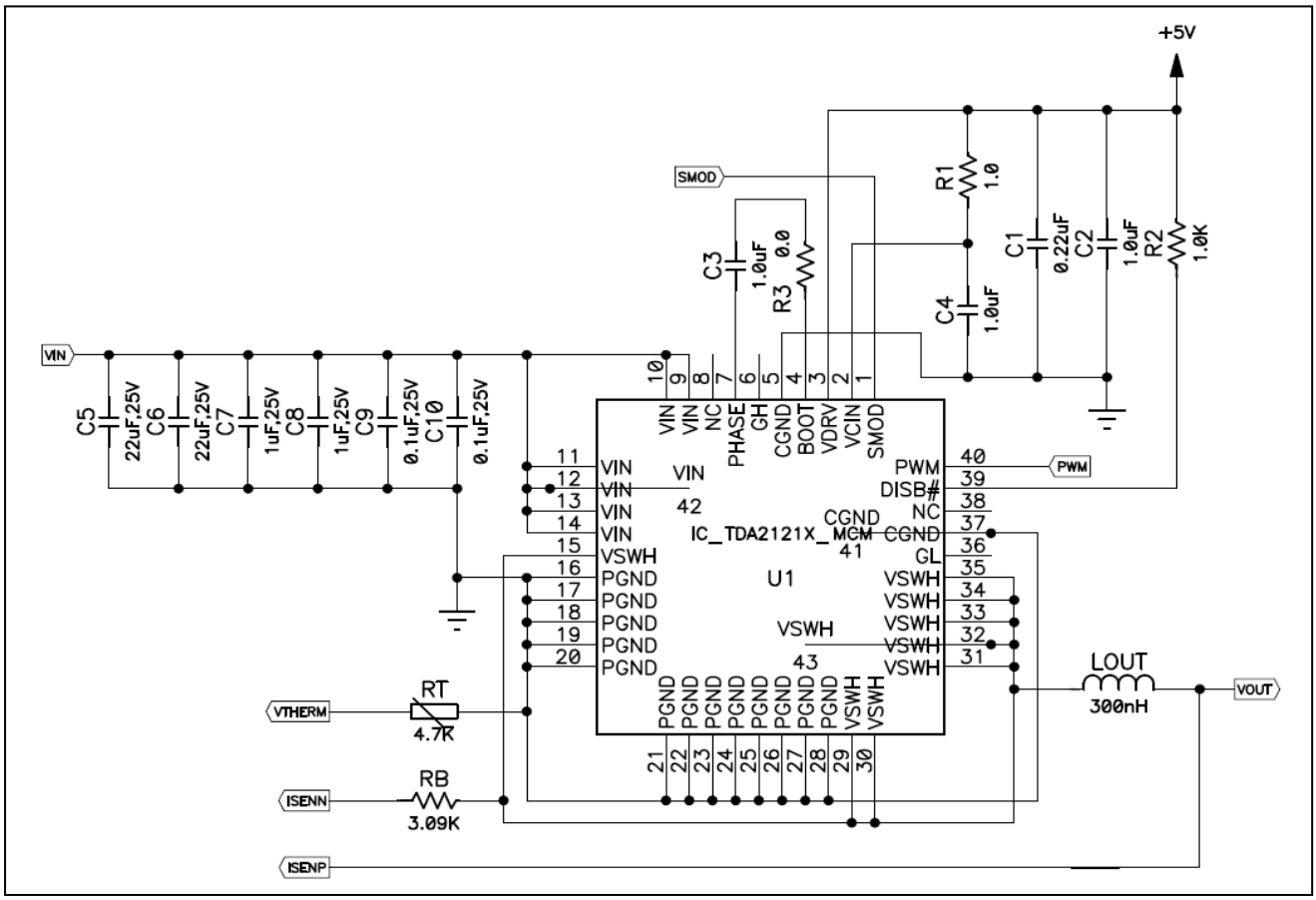

Figure 21 Single Phase DrMOS typical Application Circuit

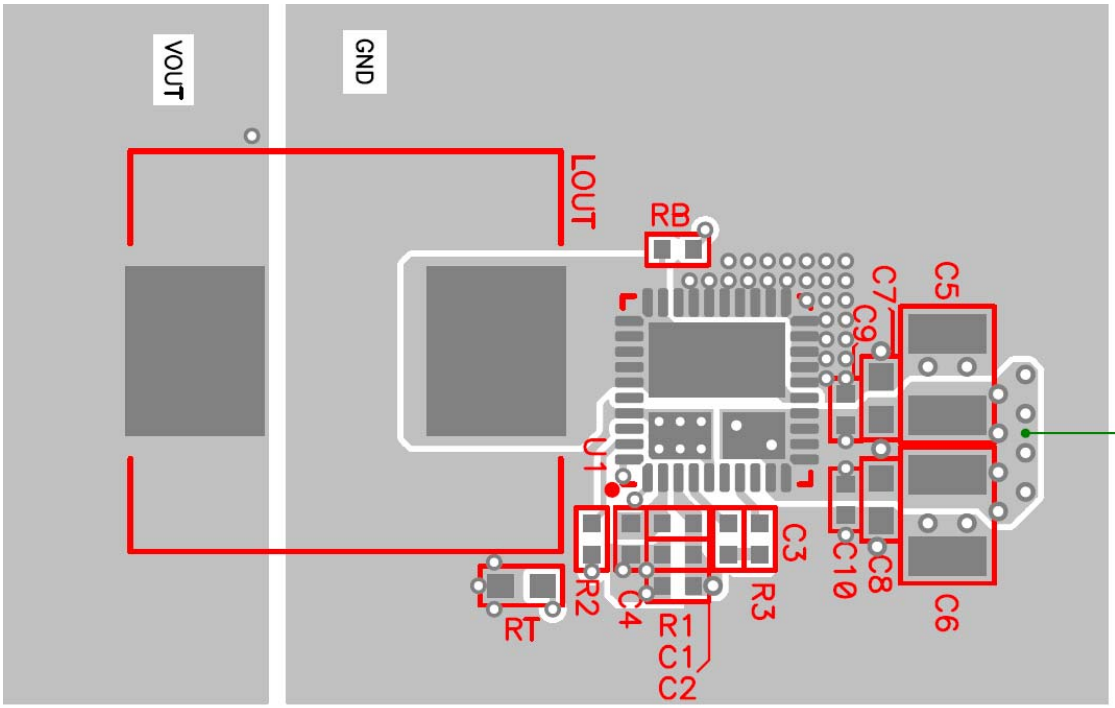

Figure 22 Single Phase DrMOS PCB Layout Example (Top Side View)
(for DrMOS Design support a customer PCB layout guide is available upon request)

For questions on technology, delivery and prices please contact the Infineon Technologies Offices in Germany or the Infineon Technologies Companies and Representatives worldwide: see the address list on the last page or our webpage at

http://www.infineon.com/DCDC

CoreControl™, OptiMOS™ and **OptiMOS II™** are trademarks of Infineon Technologies AG.

We listen to Your Comments

Any information within this document that you feel is wrong, unclear or missing at all?

Your feedback will help us to continously improve the quality of this document.



Edition 2004-11-10

Published by Infineon Technologies AG,
St.-Martin-Strasse 53,
D-81541 München

© Infineon Technologies AG 2004.
All Rights Reserved.

Attention please!

The information herein is given to describe certain components and shall not be considered as warranted characteristics.

Terms of delivery and rights to technical change reserved.

We hereby disclaim any and all warranties, including but not limited to warranties of non-infringement, regarding circuits, descriptions and charts stated herein.

Infineon Technologies is an approved CECC manufacturer.

Information

For further information on technology, delivery terms and conditions and prices please contact your nearest Infineon Technologies Office in Germany or our Infineon Technologies Representatives worldwide (see address list).

Warnings

Due to technical requirements components may contain dangerous substances. For information on the types in question please contact your nearest Infineon Technologies Office.

Infineon Technologies Components may only be used in life-support devices or systems with the express written approval of Infineon Technologies, if a failure of such components can reasonably be expected to cause the failure of that life-support device or system, or to affect the safety or effectiveness of that device or system. Life support devices or systems are intended to be implanted in the human body, or to support and/or maintain and sustain and/or protect human life. If they fail, it is reasonable to assume that the health of the user or other persons may be endangered.