TDA2030A

LINEAR INTEGRATED CIRCUIT

18W HI-FI AUDIO AMPLIFIER AND 35W DRIVER

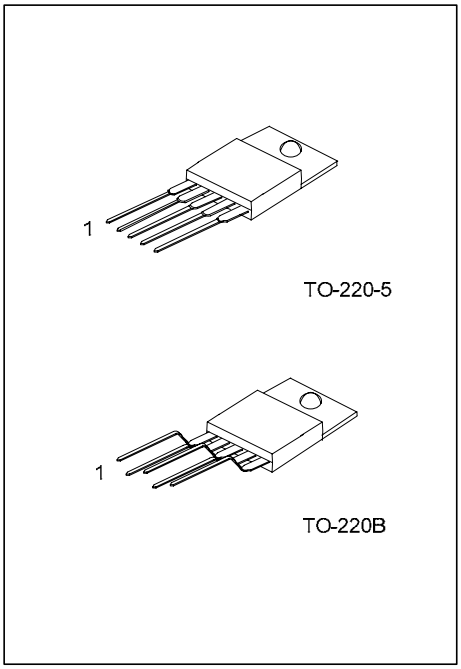

*Pb-free plating product number: TDA2030AL

■ DESCRIPTION

The UTC **TDA2030A** is a monolithic IC intended for use as low frequency class AB amplifier.

With Vs=max=44V it is particularly suited for more reliable applications without regulated supply and for 35W driver circuits using low-cost complementary pairs.

The UTC **TDA2030A** provides high output current and has very low harmonic and cross-over distortion.

Further the device incorporates a short circuit protection system comprising and arrangement for automatically limiting the dissipated power so as to keep the working point of the output transistors within their safe operating area. A conventional thermal shut-down system is also included.

■ ORDERING INFORMATION

Ordering Number		Package	Packing
Normal	Lead Free Plating		
TDA2030A-TA5-T	TDA2030AL-TA5-T	TO-220-5	Tube
TDA2030A-TB5-T	TDA2030AL-TB5-T	TO-220B	Tube

TDA2030AL-TA5-T (1)Packing Type (2)Package Type (3)Lead Plating	(1) T: Tube (2) TA5: TO-220-5, TB5: TO-220B (3) L: Lead Free Plating, Blank: Pb/Sn

■ PIN CONFIGURATION

PIN NO.	PIN NAME
1	Non inverting input
2	Inverting input
3	$-V_S$
4	Output
5	$+V_S$

Copyright © 2007 Unisonic Technologies Co., Ltd

■ ABSOLUTE MAXIMUM RATINGS (Ta=25°C)

PARAMETER	SYMBOL	RATINGS	UNIT
Supply Voltage	Vs	±22	V
Input Voltage	V_{IN}	Vs	V
Differential Input Voltage	$V_{I(DIFF)}$	±15	V
Peak Output Current(internally limited)	I_{OUT}	3.5	A
Total Power Dissipation at Tc=90°C	P_D	20	W
Junction Temperature	T_J	-40 ~ +150	°C
Storage Temperature	T_{STG}	-40 ~ +150	°C

Note: Absolute maximum ratings are those values beyond which the device could be permanently damaged. Absolute maximum ratings are stress ratings only and functional device operation is not implied.

■ ELECTRICAL CHARACTERISTICS (Refer to the test circuit, Vs =±16V, Ta=25°C)

PARAMETER	SYMBOL	TEST CONDITIONS		MIN	TYP	MAX	UNIT
Supply Voltage	Vs			±6		±22	V
Quiescent Drain Current	I_Q				50	80	mA
Input Bias Current	$I_{I(BIAS)}$	Vs=±22V			0.2	2	μA
Input Offset Voltage	$V_{I(OFF)}$				±2	±20	mV
Input Offset Current	$I_{I(OFF)}$				±20	±200	nA
Power Bandwidth	B_W	P_{OUT} =15W,R_L=4Ω			100		KHz
Output Power	P_{OUT}	d=0.5%,Gv=26dB, f=40Hz to 15KHz	R_L=4Ω	15	18		W
			R_L=8Ω	10	12		W
			Vs=±19V, R_L=8Ω	13	16		W
Open Loop Voltage Gain	Gvo	f=1kHz			80		dB
Closed Loop Voltage Gain	Gvc			25.5	26	26.5	dB
Distortion	d	P_{OUT} =0.1 to 14W, R_L=4Ω f=40Hz to 15KHz			0.08		%
		P_{OUT} =0.1 to 14W, R_L=4Ω f=1kHz			0.03		%
		P_{OUT} =0.1 to 9W, R_L=8Ω f=40Hz to 15KHz			0.5		%
Second Order CCIF Intermodulation distortion	d2	P_{OUT} =4W, R_L=4Ω f2-f1=1KHz			0.03		%
Third Order CCIF Intermodulation Distortion	d3	f1=14KHz, f2=15KHz			0.08		%
Slew rate	SR				8		V/μ sec
Signal to Noise Ratio	S/N	R_L=4Ω, Rg=10kΩ, B=curve A	P_{OUT} =15W		106		dB
			P_{OUT} =1W		94		dB
Input Noise Voltage	eN	B=curve A B= 22Hz to 22KHz			2 3	10	μV
Input Noise Current	iN	B=curve A B= 22Hz to 22KHz			50 80	200	pA
Input Resistance (pin 1)	R_{IN}	Open loop, f=1KHz		0.5	5		MΩ
Supply Voltage Rejection	SVR	R_L=4Ω, Gv=26dB Rg=22KΩ, f=100Hz			54		dB
Thermal Shut-Down Junction Temperature	T_J				145		°C

■ APPLICATION CIRCUIT

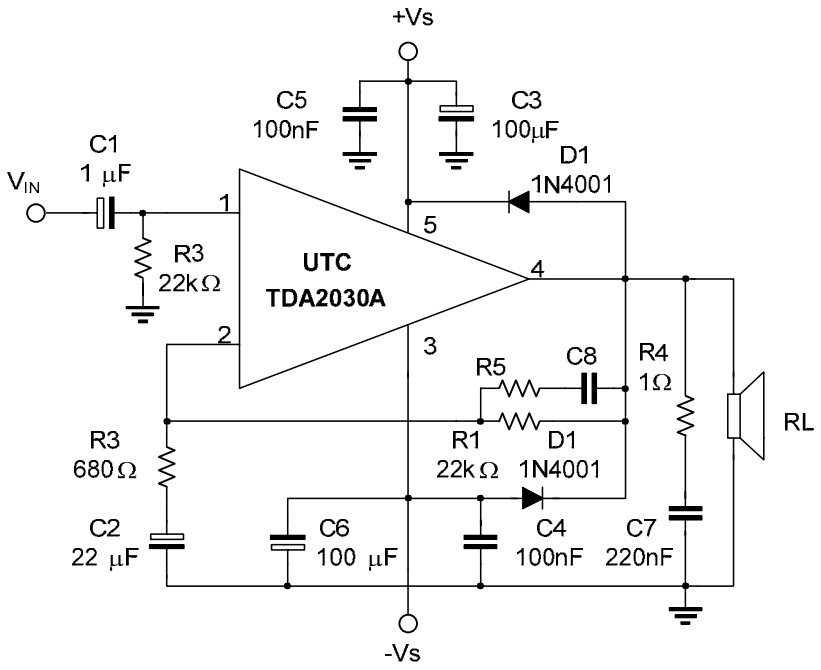

■ TEST CIRCUIT

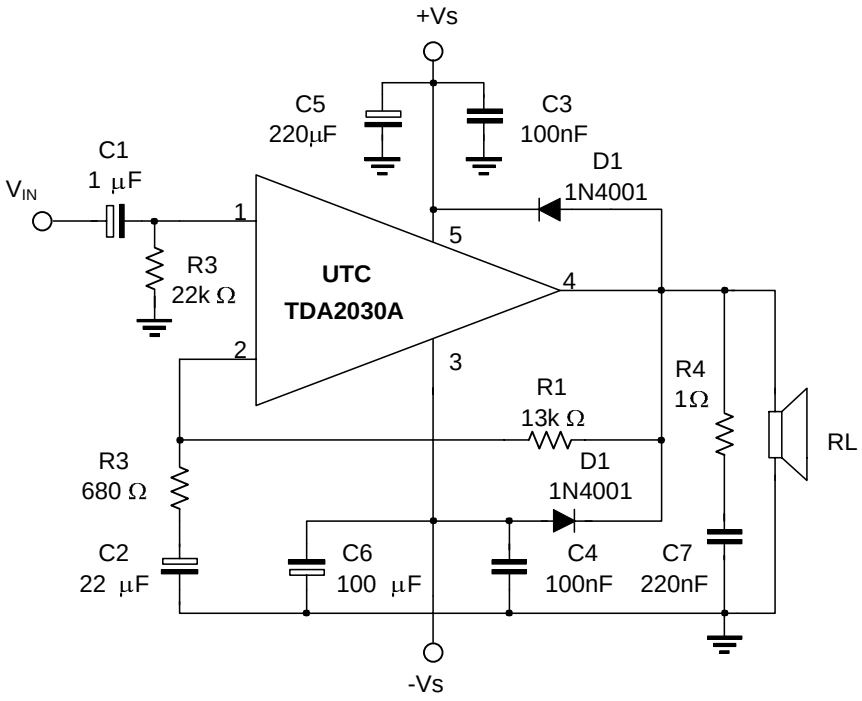

■ SINGLE SUPPLY AMPLIFIER

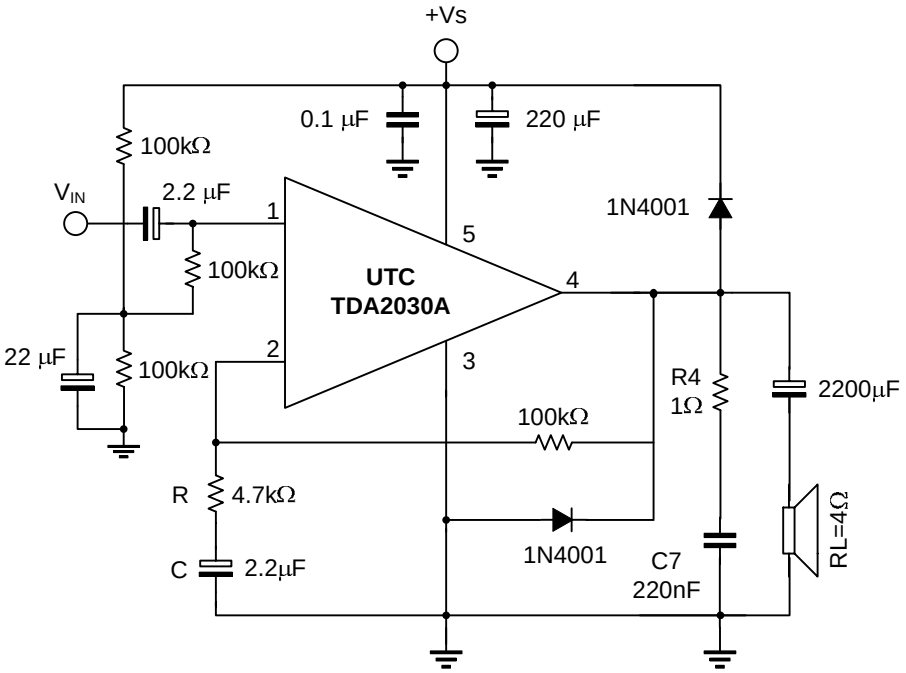

■ TYPICAL CHARACTERISTICS

Open Loop Frequency Response

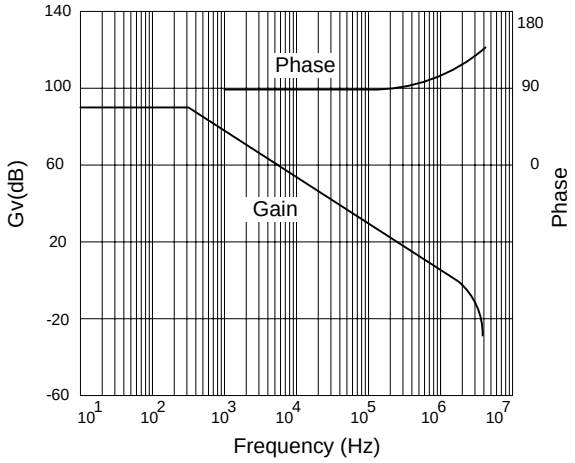

Output Power vs. Supply Voltage

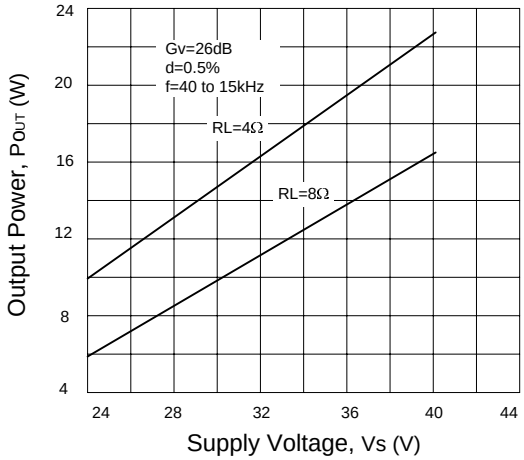

Total Harmonic Distortion vs. Output Power

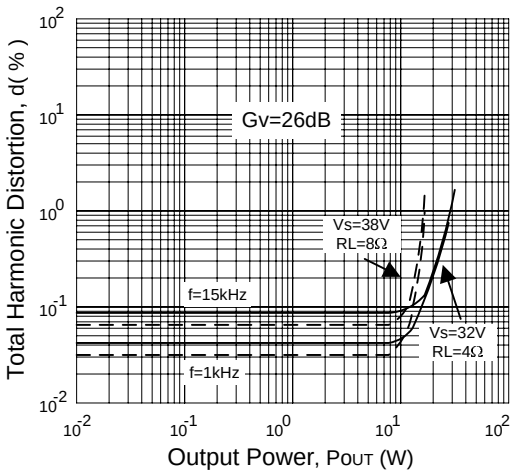

Two Tone CCIF Intermodulation Distortion

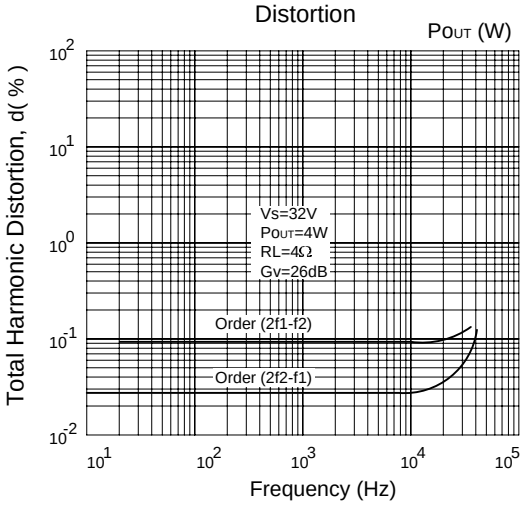

Large Signal Frequency Response

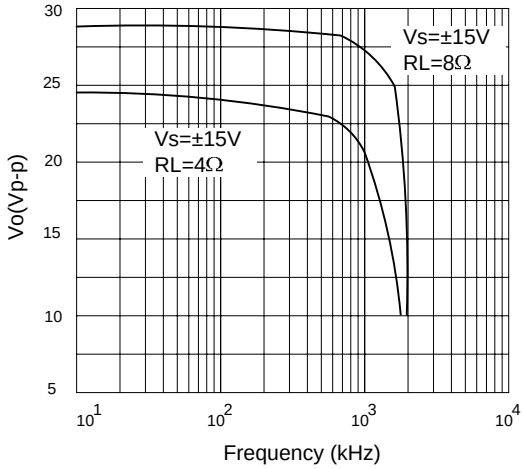

Maximum Allowable Power Dissipation vs. Ambient Temperture

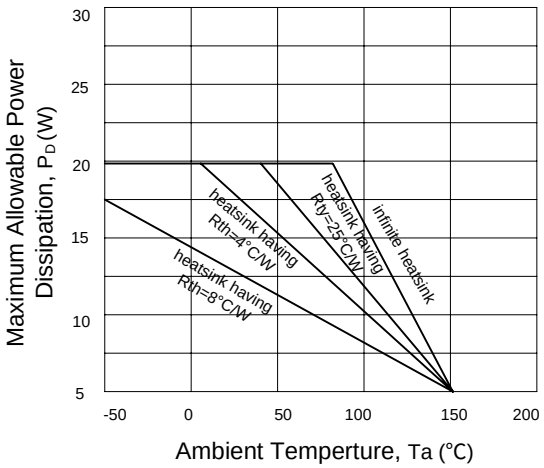

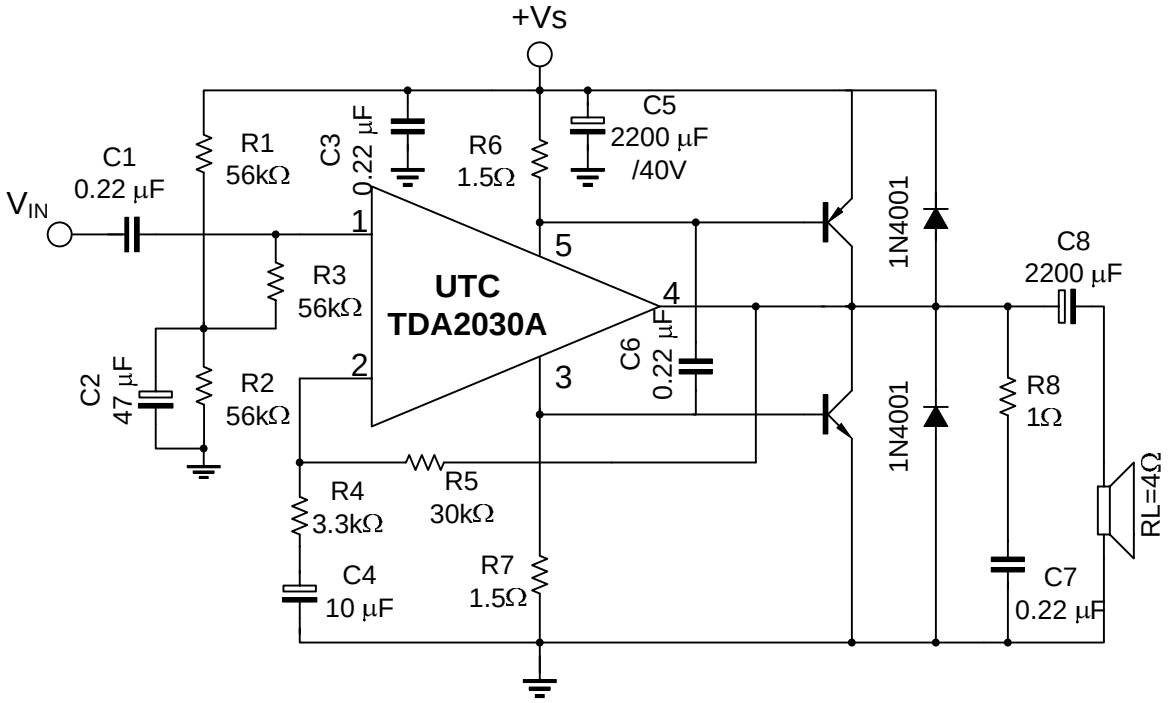

Fig. 1 Single supply high power amplifier

■ TYPICAL PERFORMANCE OF THE CIRCUIT OF FIG. 1

PARAMETER	SYMBOL	TEST CONDITIONS	MIN	TYP	MAX	UNIT
Supply Voltage	Vs			36	44	V
Quiescent Drain Current	I_Q	Vs=36V		50		mA
Output Power	P_{OUT}	d=0.5%, RL=4Ω f=40Hz to 15kHz, Vs=39V		35		W
		d=0.5%, RL=4Ω f=40Hz to 15kHz, Vs=36V		28		
		d=10%, f=1kHz, RL=4Ω, Vs=39V		44		
		d=10%,RL=4Ω f=1kHz,Vs=36V		35		
Voltage Gain	Gv	f=1kHz	19.5	20	20.5	dB
Slew Rate	SR			8		V/µsec
Total Harmonic Distortion	d	P_{OUT}=20W, f=1kHz		0.02		%
		P_{OUT}=20W, f=40Hz to 15kHz		0.05		%
Input Sensitivity	V_{IN}	Gv=20dB, P_{OUT}=20W, f=1kHz, RL=4Ω		890		mV
Signal to Noise Ratio	S/N	RL=4Ω, Rg=10kΩ B=curve A, P_{OUT}=25W		108		dB
		RL=4Ω, Rg=10kΩ B=curve A, P_{OUT}=4W		100		

■ TYPICAL CHARACTERISTICS(Cont.)

Output Power vs. Supply Voltage

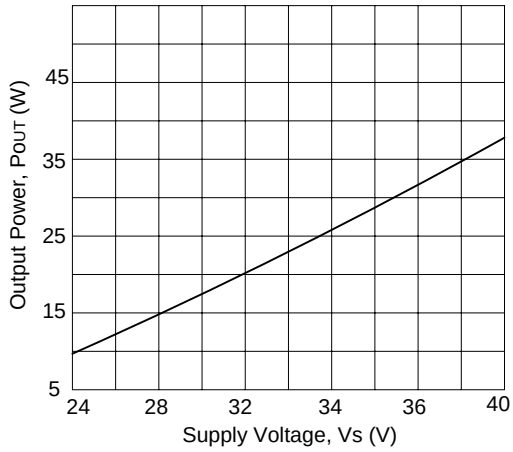

Total Harmonic Distortion vs. Output Power

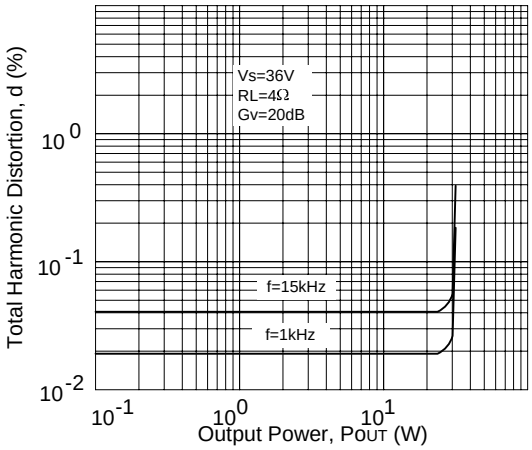

Output Power vs. Input Level

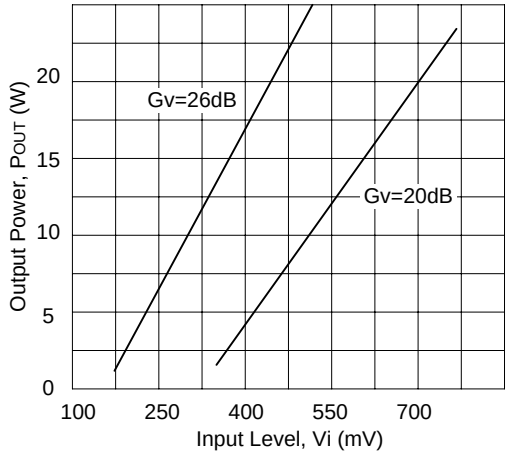

Power Dssipation vs. Output Power

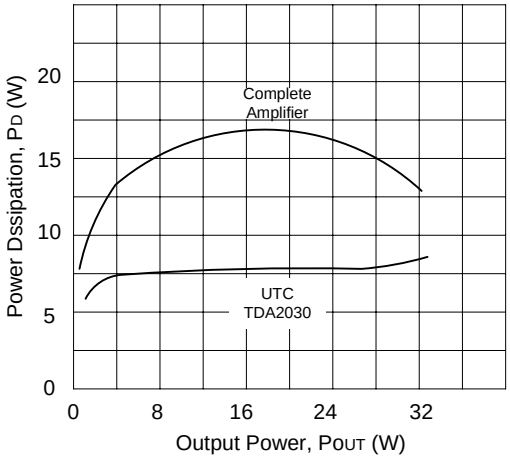

TYPICAL AMPLIFIER WITH SPLIT POWER SUPPLY

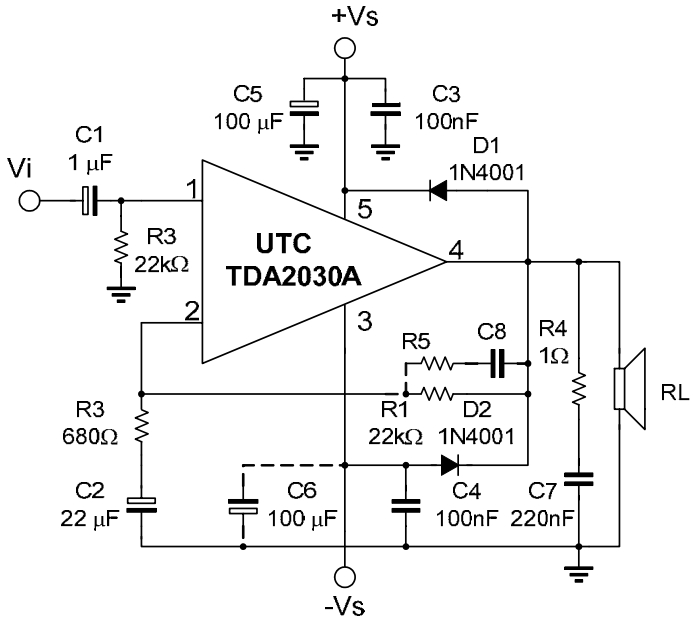

BRIDGE AMPLIFIER WITH SPLIT POWER SUPPLY (P_{OUT}=34W, V_S=16V, V_S=-16V)

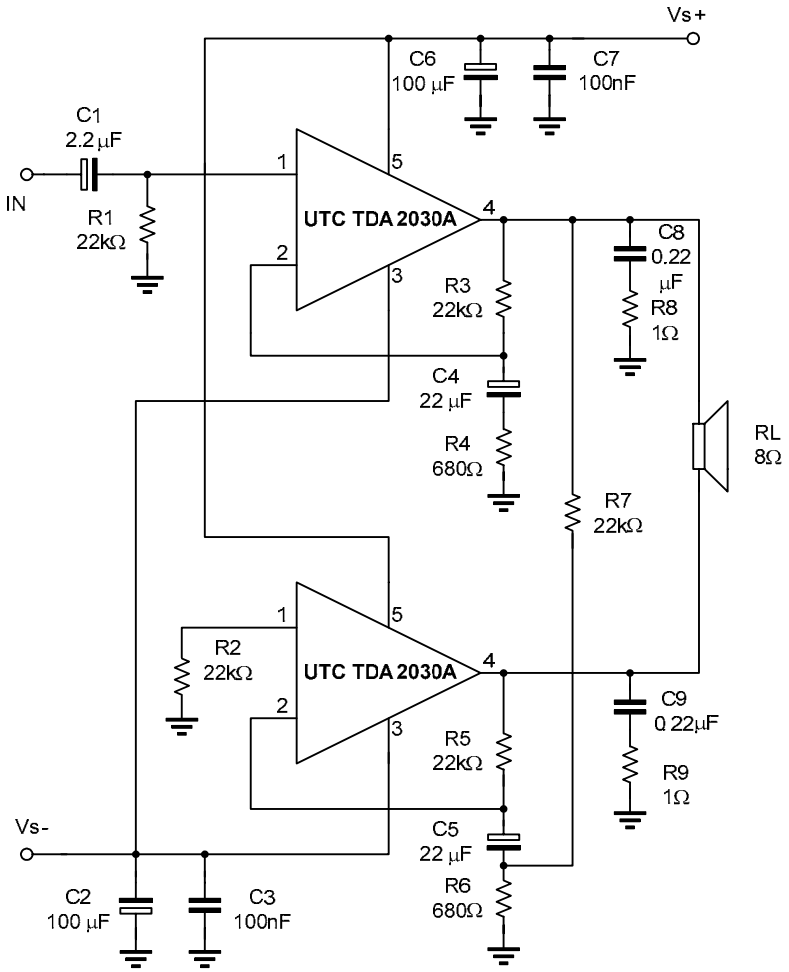

■ MULTIWAY SPEAKER SYSTEMS AND ACTIVE BOXES

Multiway loudspeaker systems provide the best possible acoustic performance since each loudspeaker is specially designed and optimized to handle a limited range of frequencies. Commonly, these loudspeaker systems divide the audio spectrum two or three bands.

To maintain a flat frequency response over the Hi-Fi audio range the bands cobered by each loudspeaker must overlap slightly. Imbalance between the loudspeakers produces unacceptable results therefore it is important to ensure that each unit generates the correct amount of acoustic energy for its segments of the audio spectrum. In this respect it is also important to know the energy distribution of the music spectrum to determine the cutoff frequencies of the crossover filters (see Fig. 2). As an example, a 100W three-way system with crossover frequencies of 400Hz and 3KHz would require 50W for the woofer, 35W for the midrange unit and 15W for the tweeter.

Both active and passive filters can be used for crossovers but active filters cost significantly less than a good passive filter using aircored inductors and non-electrolytic capacitors. In addition active filters do not suffer from the typical defects of passive filters:

--Power less;

--Increased impedance seen by the loudspeaker (lower damping)

--Difficulty of precise design due to variable loudspeaker impedance.

Obviously, active crossovers can only be used if a power amplifier is provide for each drive unit. This makes it particularly interesting and economically sound to use monolithic power amplifiers.

In some applications complex filters are not relay necessary and simple RC low-pass and high-pass networks (6dB/octave) can be recommended.

The result obtained are excellent because this is the best type of audio filter and the only one free from phase and transient distortion.

The rather poor out of band attenuation of single RC filters means that the loudspeaker must operate linearly well beyond the crossover frequency to avoid distortion.

A more effective solution is shown in Fig. 3.

The proposed circuit can realize combined power amplifiers and 12dB/octave high-pass or low-pass filters.

In proactive, at the input pins amplifier two equal and in-phase voltages are available, as required for the active filter operations.

The impedance at the Pin (-) is of the order of 100Ω, while that of the Pin (+) is very high, which is also what was wanted.

Fig. 2 Power Distribution vs. Frequency

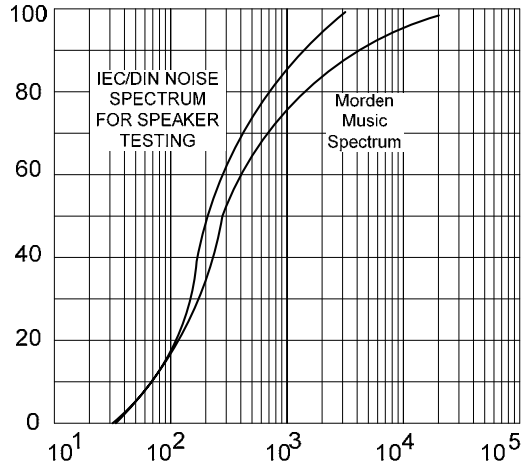

Fig. 3 Active power filter

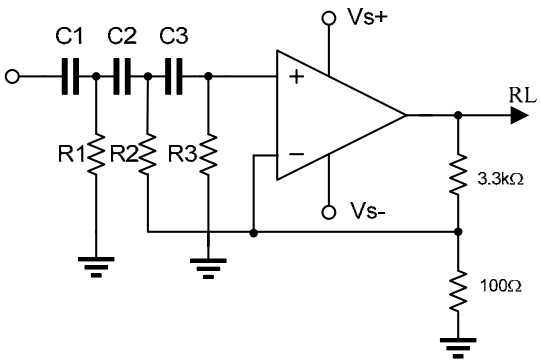

The components values calculated for fc=900Hz using a Bessel 3rd Sallen and Key structure are:

C1=C2=C3=22nF, R1=8.2KΩ, R2=5.6KΩ, R3=33KΩ.

Using this type of crossover filter, a complete 3-way 60W active loudspeaker system is shown as below.

It employs 2nd order Buttherworth filter with the crossover frequencies equal to 300Hz and 3kHz.

The midrange section consistors of two filters a high pass circuit followed by a low pass network. With Vs=36V the output power delivered to the woofer is 25W at d=0.06% (30W at d=0.5%).The power delivered to the midrange and

the tweeter can be optimized in the design phase taking in account the loudspeaker efficiency and impedance (RL=4Ω to 8Ω).

It is quite common that midrange and tweeter speakers have an efficiency 3dB higher than woofers.

3WAY 60W ACTIVE LOUDSPEAKER SYSTEM (Vs=36V)

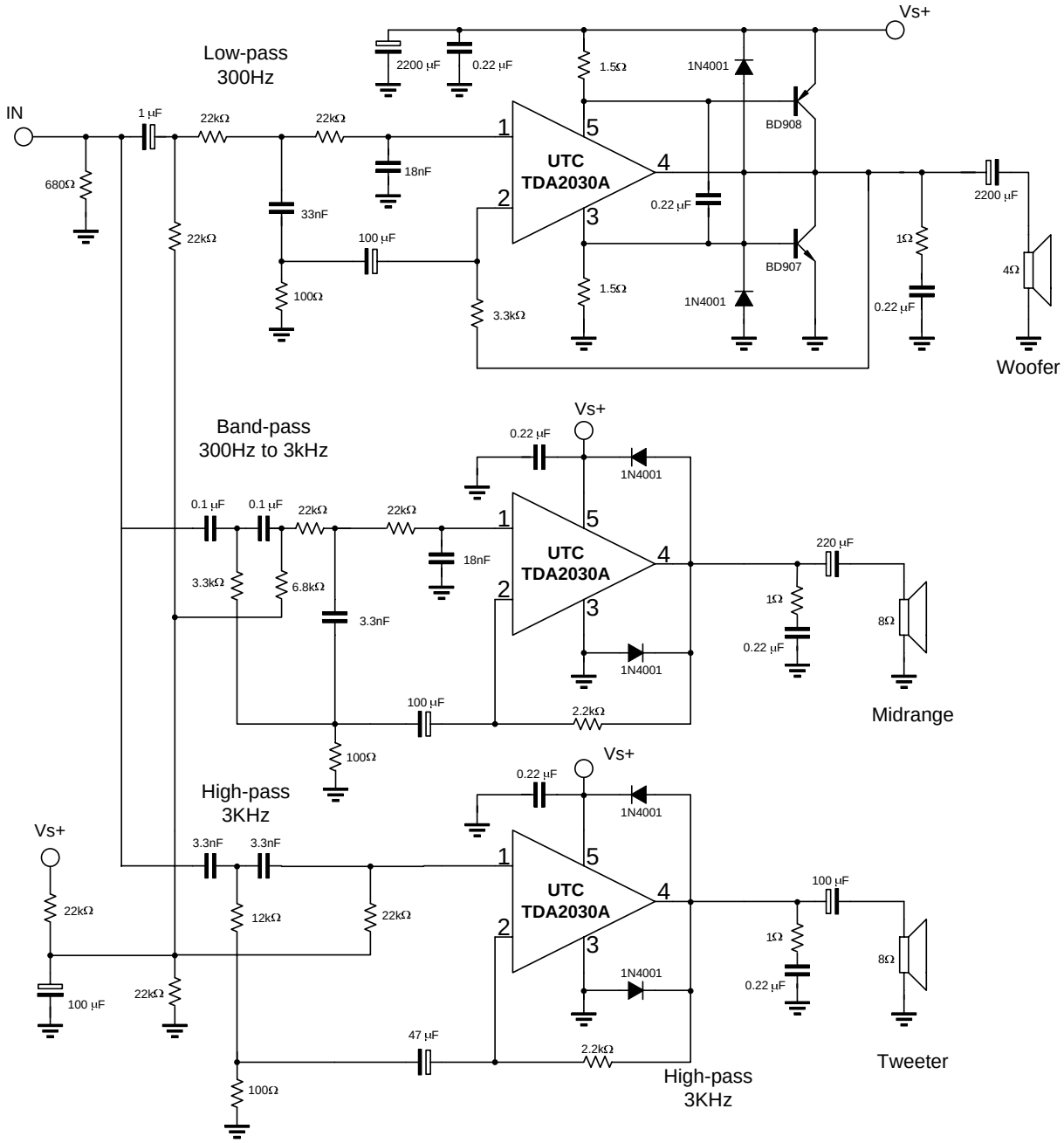

■ MUSICAL INSTRUMENTS AMPLIFIERS

Another important field of application for active system is music.

In this area the use of several medium power amplifiers is more convenient than a single high power amplifier, and it is also more reliable. A typical example (see Fig. 4) consist of four amplifiers each driving a low-cost, 12 inch loudspeaker. This application can supply 80 to 160W rms.

■ TRANSIENT INTER-MODULATION DISTORTION(TIM)

Transient inter-modulation distortion is an unfortunate phenomena associated with negative-feedback amplifiers. When a feedback amplifier receives an input signal which rises very steeply, i.e. contains high-frequency components, the feedback can arrive too late so that the amplifiers overloads and a burst of inter-modulation distortion will be produced as in Fig.5. Since transients occur frequently in music this obviously a problem for the designed of audio amplifiers. Unfortunately, heavy negative feedback is frequency used to reduce the total harmonic distortion of an amplifier, which tends to aggravate the transient inter-modulation (TIM situation.)

Fig.4 High Power Active Box For Musical Instrument

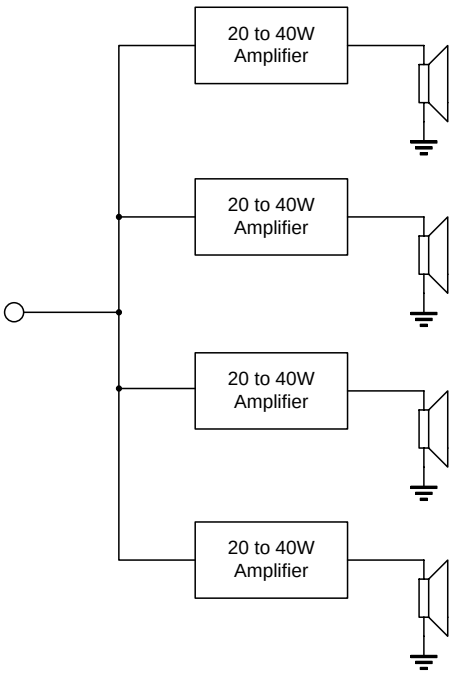

Fig.5 Overshoot Phenomenon In Feedback Amplifiers

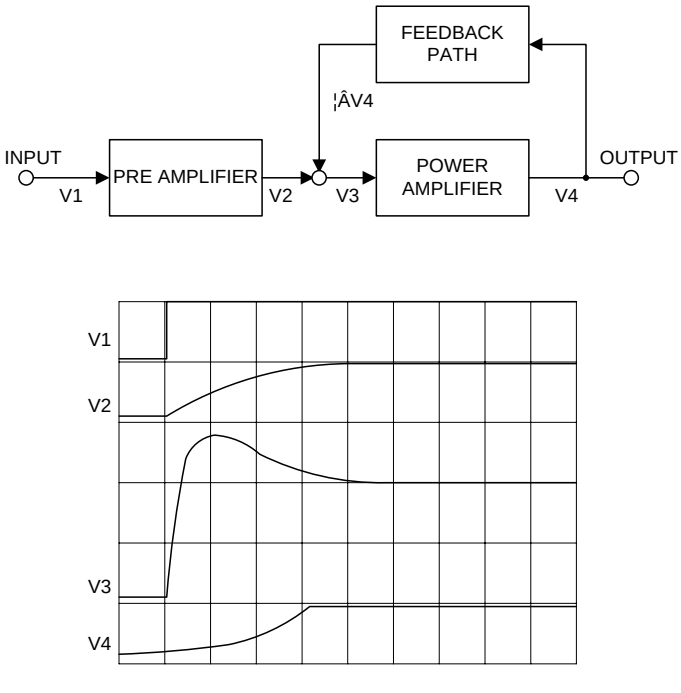

The best known method for the measurement of TIM consists of feeding sine waves superimposed onto square wavers, into the amplifier under test. The output spectrum is then examined using a spectrum analyzer and compared to the input. This method suffers from serious disadvantages: the accuracy is limited, the measurement is a tatter delicate operation and an expensive spectrum analyzer is essential.

The "inverting-sawtooth" method of measurement is based on the response of an amplifier to a 20KHz saw-tooth wave-form. The amplifier has no difficulty following the slow ramp but it cannot follow the fast edge. The output will follow the upper line in Fig. 6 cutting of the shade area and thus increasing the mean level. If this output signal is filtered to remove the saw-tooth, direct voltage remains which indicates the amount of TIM distortion, although it is difficult to measure because it is indistinguishable from the DC offset of the amplifier. This problem is neatly avoided in the IS-TIM method by periodically inverting the saw-tooth wave-form at a low audio frequency as shown in Fig.7.In the case of the saw-tooth in Fig. 8 the mean level was increased by the TIM distortion, for a saw-tooth in the other direction the opposite is true.

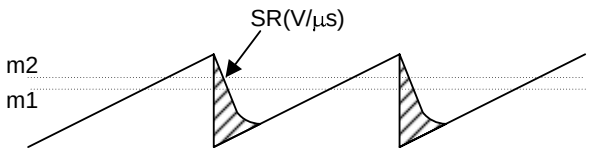

Fig.6 20kHz Sawtooth Waveform

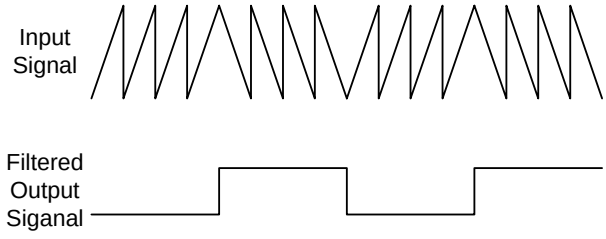

Fig. 7 Inverting Sawtooth Waveform

The result is an AC signal at the output whole peak-to-peak value is the TIM voltage, which can be measured easily with an oscilloscope. If the peak-topeak value of the signal and the peak-to-peak of the inverting sawtooth are measured, the TIM can be found very simply from:

$$TIM = \frac{VOUT}{Vsawtooth} * 100$$

Fig. 8 TIM Distortion Vs. Output Power

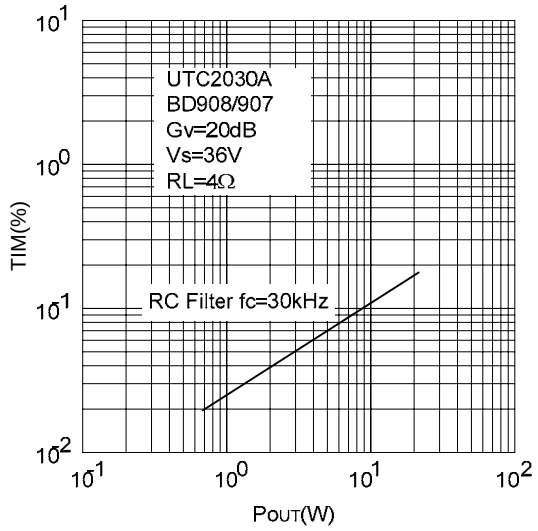

Fig. 9 TIM Design Diagram (fc=30kHz)

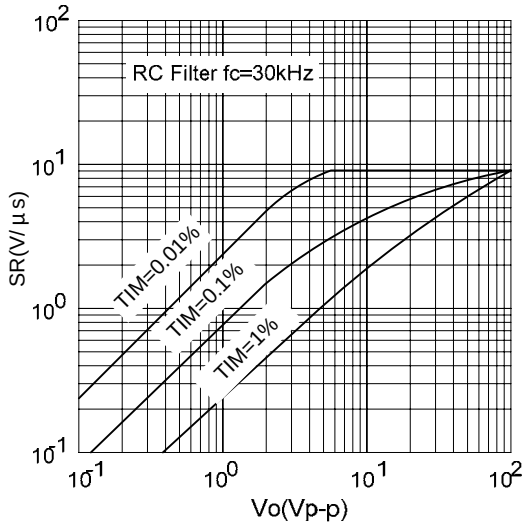

In Fig.8 The experimental results are shown for the 30W amplifier using the **UTC TDA2030A** as a driver and a low-cost complementary pair. A simple RC filter on the input of the amplifier to limit the maximum signal slope(SS) is an effective way to reduce TIM.

The Diagram of Fig.9 can be used to find the Slew-Rate(SR) required for a given output power or voltage and a TIM design target.

For example if an anti-TIM filter with a cutoff at 30kHz is used and the max. peak to peak output voltage is 20V then, referring to the diagram, a Slew-Rate of 6V/μs is necessary for 0.1% TIM.

As shown Slew-Rates of above 10V/μs do not contribute to a further reduction in TIM.

Slew-Rates of 100V/μs are not only useless but also a disadvantage in hi-fi audio amplifiers because they tend to turn the amplifier into a radio receiver.

■ POWER SUPPLY

Using monolithic audio amplifier with non regulated supply correctly. In any working case it must provide a supply voltage less than the maximum value fixed by the IC breakdown voltage.

It is essential to take into account all the working conditions, in particular mains fluctuations and supply voltage variations with and without load. The **UTC TDA2030A**(Vsmax=44V) is particularly suitable for substitution of the standard IC power amplifiers(with Vsmax=36V) for more reliable applications.

An example, using a simple full-wave rectifier followed by a capacitor filter, is shown in the table and in the diagram of Fig. 10.

A regulated supply is not usually used for the power output stages because of its dimensioning must be done taking into account the power to supply in signal peaks. They are not only a small percentage of the total music signal, with consequently large overdimensioning of the circuit.

Even if with a regulated supply higher output power can be obtained(Vs is constant in all working conditions),the additional cost and power dissipation do not usually justify its use. using non-regulated supplies, there are fewer designee restriction. In fact, when signal peaks are present, the capacitor filter acts as a flywheel supplying the required energy.

In average conditions, the continuous power supplied is lower. The music power/continuous power ratio is greater in case than for the case of regulated supplied, with space saving and cost reduction.

Fig. 10 DC characteristics of 50W non-regulated supply

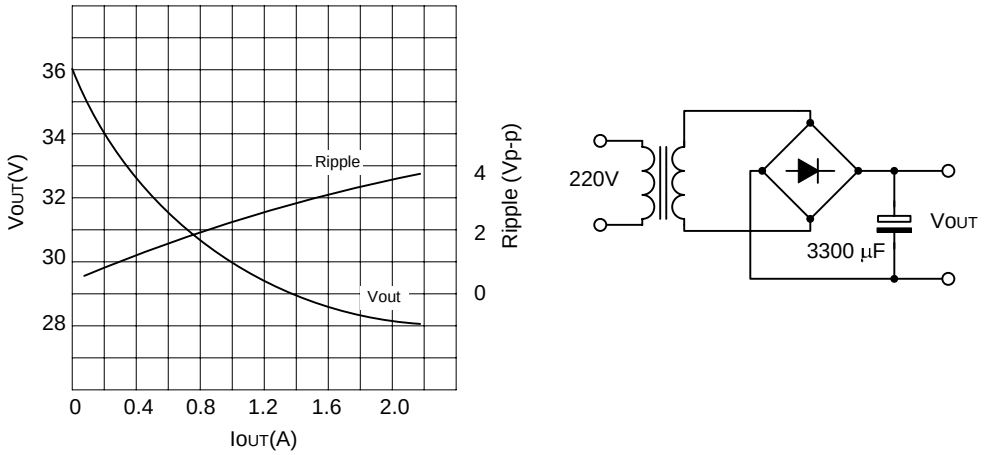

Mains(220V)	Secondary Voltage	DC Output Voltage(Vo)		
		Io=0	Io=0.1A	Io=1A
+20%	28.8V	43.2V	42V	37.5V
+15%	27.6V	41.4V	40.3V	35.8V
+10%	26.4V	39.6V	38.5V	34.2V
	24V	36.2V	35V	31V
-10%	21.6V	32.4V	31.5V	27.8V
-15%	20.4V	30.6V	29.8V	26V
-20%	19.2V	28.8V	28V	24.3V

■ SHORT CIRCUIT PROTECTION

The UTC TDA2030A has an original circuit which limits the current of the output transistors. This function can be considered as being peak power limiting rather than simple current limiting. It reduces the possibility that the device gets damaged during an accidental short circuit from AC output to Ground.

■ THERMAL SHUT-DOWN

The presence of a thermal limiting circuit offers the following advantages:

1).An overload on the output (even if it is permanent), or an above limit ambient temperature can be easily supported since the T_J can not be higher than 150°C

2).The heatsink can have a smaller factor of safety compared with that of a congenital circuit, There is no possibility of device damage due to high junction temperature increase up to 150°C, the thermal shut-down simply reduces the power dissipation and the current consumption.

■ APPLICATION SUGGESTION

The recommended values of the components are those shown on application circuit of **TYPICAL AMPLIFIER WITH SPLIT POWER SUPPLY**. Different values can be used. The following table can help the designer.

COMPONENT	RECOMMENDED VALUE	PURPOSE	LARGER THAN RECOMMENDED VALUE	SMALLER THAN RECOMMENDED VALUE
R1	22KΩ	Closed loop gaon setting.	Increase of Gain	Decrease of Gain
R2	680Ω	Closed loop gaon setting.	Decrease of Gain	Increase of Gain
R3	22KΩ	Non inverting input biasing	Increase of input impedance	Decrease of input impedance
R4	1Ω	Frequency stability	Danger of oscillation at high frequencies with inductive loads.	
R5	≈3R2	Upper frequency cutoff	Poor high frequencies attenuation	Danger of oscillation
C1	1μF	Input DC decoupling		Increase of low frequencies cutoff
C2	22μF	Inverting DC decoupling		Increase of low frequencies cutoff
C3,C4	0.1μF	Supply voltage bypass		Danger of oscillation
C5,C6	100μF	Supply voltage bypass		Danger of oscillation
C7	0.22μF	Frequency stability		Larger bandwidth
C8	≈1/(2π*B*R1)	Upper frequency cutoff	smaller bandwidth	Larger bandwidth
D1,D2	1N4001	To protect the device against output voltage spikes.		

UTC assumes no responsibility for equipment failures that result from using products at values that exceed, even momentarily, rated values (such as maximum ratings, operating condition ranges, or other parameters) listed in products specifications of any and all UTC products described or contained herein. UTC products are not designed for use in life support appliances, devices or systems where malfunction of these products can be reasonably expected to result in personal injury. Reproduction in whole or in part is prohibited without the prior written consent of the copyright owner. The information presented in this document does not form part of any quotation or contract, is believed to be accurate and reliable and may be changed without notice.