GSG 勁力 半導体

Gunter Semiconductor GmbH

TDA1574

EDITION 09/00

Car and Home Receiver Integrated FM tuner

For inquiry please contact :

China	Tel: 0086-755-3200442	Fax: 0086-755-3355520
Hong Kong	Tel : 00852-26190748	Fax: 00852-24948080
e-mail	sales@gsg-asia.com	

Integrated FM Tuner for Radio Receivers

Short Description

The integrated circuit contains all the function units needed for a VHF tuner with the exception of the RF pre stage. It is mainly applied in the RF section of car radios and home receivers.

Package

• DIP 18

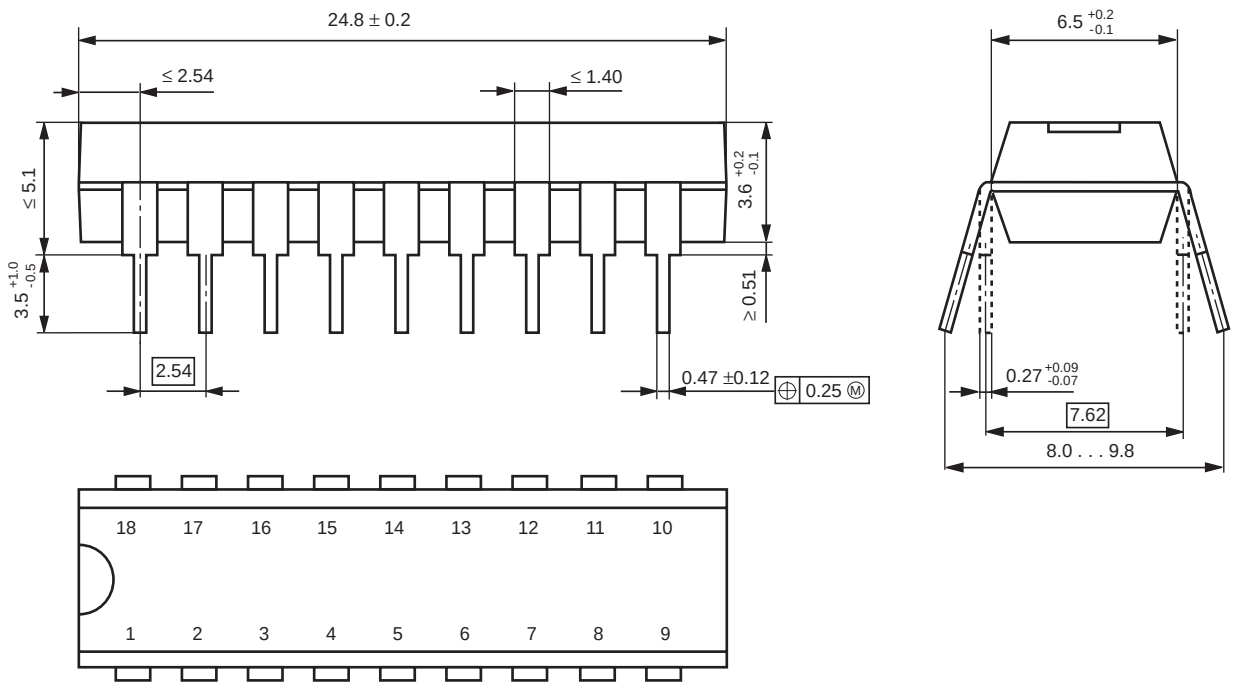

Pin Configuration

1	mixer input 1	10	IF output
2	mixer input 2	11	standby switch
3	wideband information input	12	narrow band information input
4	ground	13	IF input 1
5	reference voltage	14	IF input 2
6	oscillator output	15	supply voltage
7	oscillator input 1	16	mixer output 1
8	oscillator input 2	17	mixer output 2
9	buffered oscillator output	18	AGC-output

Block Diagram

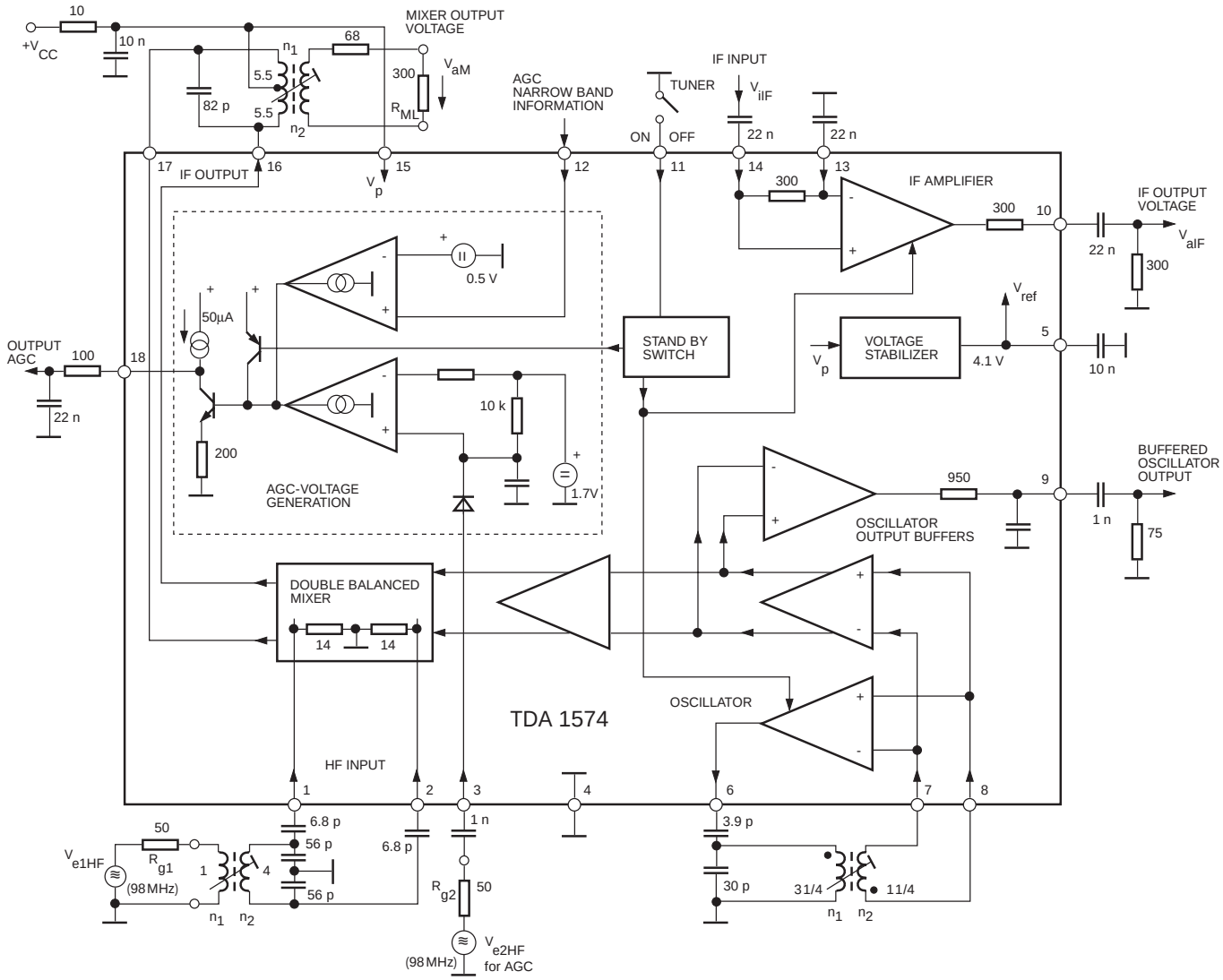

Functional Description

The TDA1574 is an integrated monolithic FM tuner for use in the RF / IF part of car radios and home receivers. It contains all function units for a complete VHF tuner with exception of a RF stage.

The following sections are integrated:

- mixer
- oscillator inclusive buffer stages and a measuring output
- linear IF amplifier
- standby switch
- reference voltage source
- control voltage generation

The RF input signal reaches a symmetrically built up mixer, its input stages in common base enable very well large - signal characteristics. With exception of the RF input signal the mixer receives via buffer stages an ultra pure oscillator signal with sufficient amplitude, generated by the oscillator itself. Moreover, the oscillator signal is available at pin 9 via buffer stages for instance in order to drive frequency - synthesizers. The IF signal, supplied from the mixer, can be amplified by a linear IF preamplifier which is proofed against overdriving in order to balance signal attenuation by selection means. Wideband or narrow band or also combined gain control of the pre stage can be selected by means of an internal generated control voltage.
Further on the TDA1574 contains an electronic standby switch. The oscillator can be blocked by this switch and the gain of the RF pre stage can be reduced, so that the IC is ready at once after activating of the FM operation, without thermal transients.
An integrated voltage supply delivers a temperature independent voltage of about 4.15 V to provide the oscillator and to generate an internal comparison voltage. This voltage is available at pin 5.

Absolute Maximum Ratings

		min	max	unit
Supply voltage	V_{CC}	0.3	18	V
Mixer output DC voltage	V_{16-4} V_{17-4}		35 35	V V
Narrow band information input voltage	V_{12-4}	0.3	7	V
Reference voltage	V_{5-4}	0.3	7	V
Standby switch input voltage	V_{11-4}	0.3	23	V
Total power dissipation	P_{tot}		800	mW
Ambient operating temperature	T_a	-40	85	°C
Storage temperature	T_s	-55	150	°C
Thermal resistance	R_{th}		80	K/W

note: All pins are short-circuit protected to ground

Recommended Operational Conditions

		min	max	unit
Supply voltage	V_9	7.0	16	V
Ambient operating temperature	T_a	-40	85	°C

Characteristics

V_{CC} = 8.5 V, T_a = 25 °C unless specified otherwise
valid for a test circuit according to the shown first figure.

		min	typ	max	unit
Power supply					
Supply voltage	V_{CC}	7.0	8.5	16.0	V
Supply current (except mixer)	I_{CC}	16.0	24.4	30.0	mA
Reference voltage	V_{5-4}	3.9	4.1	4.4	V
Mixer					
Current consumption	$I_{16} + I_{17}$	3.5	3.9	4.5	mA
DC input voltage	$V_{1,2,4}$	4.0		35.0	V
DC output voltage	$V_{16,17-4}$	4.0		35.0	V
Noise figure	NF		10		dB
Noise figure including input network	NF		12		dB
3rd order intercept point	EMF_{1IP3}		117		dBµV
Conversion power gain	G_{cp}	10	14		dB
Input resistance	R_{1-4}		22		Ω
Input capacitance	C_{1-4}		14		pF
Output resistance	R_{17-4}		1.9		kΩ
Output capacitance	C_{17-4}		5.7		pF
Oscillator					
DC input voltage	$V_{7,8-4}$		1.3		V
DC output voltage	V_{6-4}		2.0		V
Residual FM	Δf		2.2		Hz
Oscillator output buffer (measuring output)					
DC output voltage	V_{9-4}		6.0		V
Oscillator output voltage R_L = infinite, C_L = 2 pF R_L = 75 Ω	 $V_{9-4(rms)}$ $V_{9-4(rms)}$	 30 30	 110 62		 mV mV

		min	typ	max	unit
Output resistance	R_{9-15}		950		Ω
Linear IF amplifier					
DC input voltage	V_{13-4}		1.2		V
DC output voltage	V_{10-4}		4.5		V
Input impedance	R_{14-13} C_{14-13}	240	300 13	360	Ω pF
Output impedance	R_{10-4} C_{10-4}	240	300 3	360	Ω pF
Voltage gain f = 10.7 MHz	G_V	28	30.6		dB
1 dB compression point V_{CC} = 8.5 V V_{CC} = 7.5 V	 $V_{10-4(rms)}$ $V_{10-4(rms)}$		 750 550		 mV mV
Signal to noise ratio	S/N		6.6		dB
Keyed AGC					
Output voltage range	V_{18-4}	0.5		V_{CC}-0.3	V
AGC output current I_3 = 0 or V_{12-4} = 450 mV $V_{18-4} = V_{CC} / 2$ V_{3-4} = 2 V, V_{12-4} =1 V, $V_{18-4} = V_{15-4}$	 $-I_{18}$ I_{18}	 25 2	 50 35	 100 5	 µA mA
Narrowband threshold V_{3-4} = 2 V, V_{12-4} = 550 V V_{18-4} = 450 V	 V_{18-4} V_{18-4}	 V_{CC}-0.3	 0.036	 1	 V V
Input impedance	R_{3-4} C_{3-4}		4 3		kΩ pF
Wideband threshold V_{12-4} = 0.7 V, $V_{18-4} = V_{CC} / 2$, I_{18} = 0	$EMF_{2(rms)}$		20		mV
Electronic standby switch					
Input switching voltage for threshold ON at $V_{18-4} \geq V_{CC}$ - 3 V for threshold OFF at $V_{18-4} \leq$ 0.5 V	 V_{11-4} V_{11-4}	 0 3.3		 2.3 20	 V V

		min	typ	max	unit
Switching range	V_{11-4}	2.3	2.8	3.3	V
Input current at ON condition with V_{11-4} = 0 at OFF condition with V_{11-4} = 20 V	$-I_{11}$ I_{11}		60 10	150 20	µA µA
Input voltage at I_{11} = 0	V_{11-4}		3.0	4.4	V

Dependences

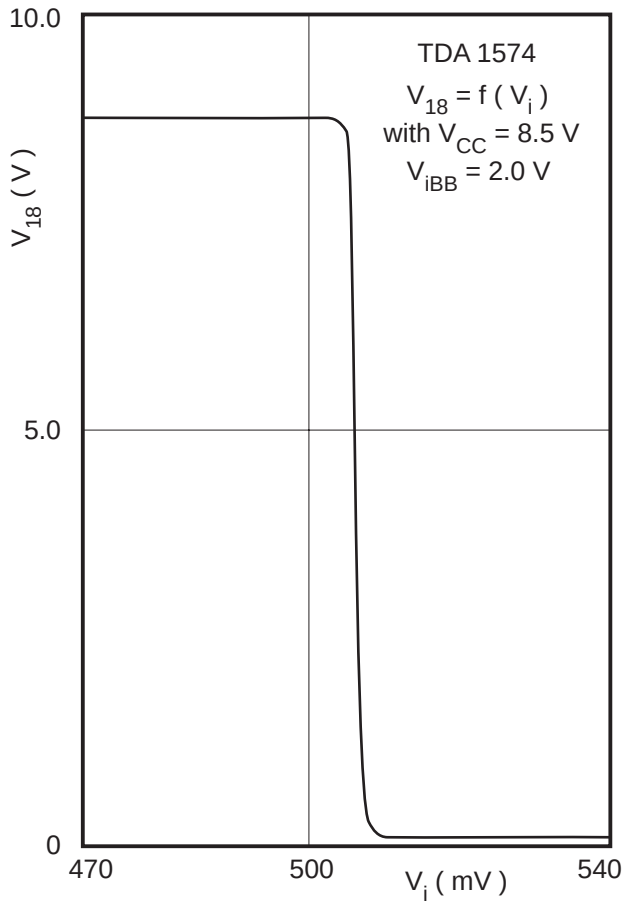

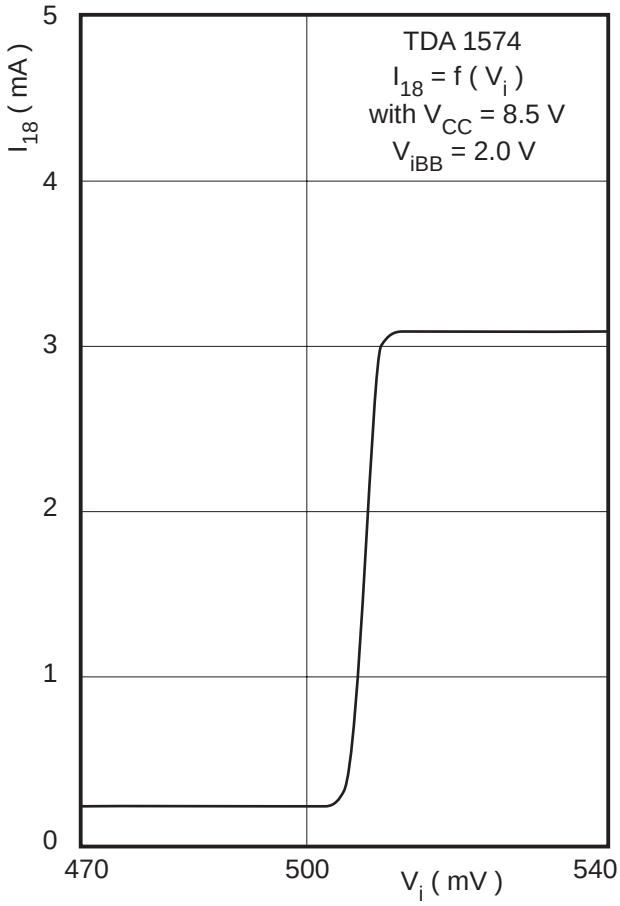

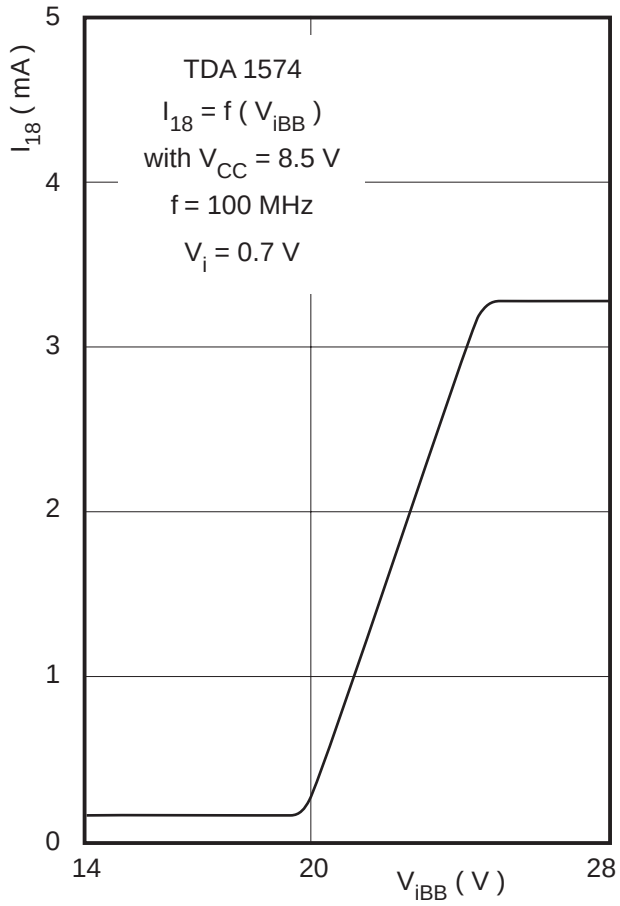
TDA 1574
$I_{18} = f (V_{iBB})$
with V_{CC} = 8.5 V
f = 100 MHz
V_i = 0.7 V
I_{18} (mA)
5
4
3
2
1
0
14
20
28
V_{iBB} (V)

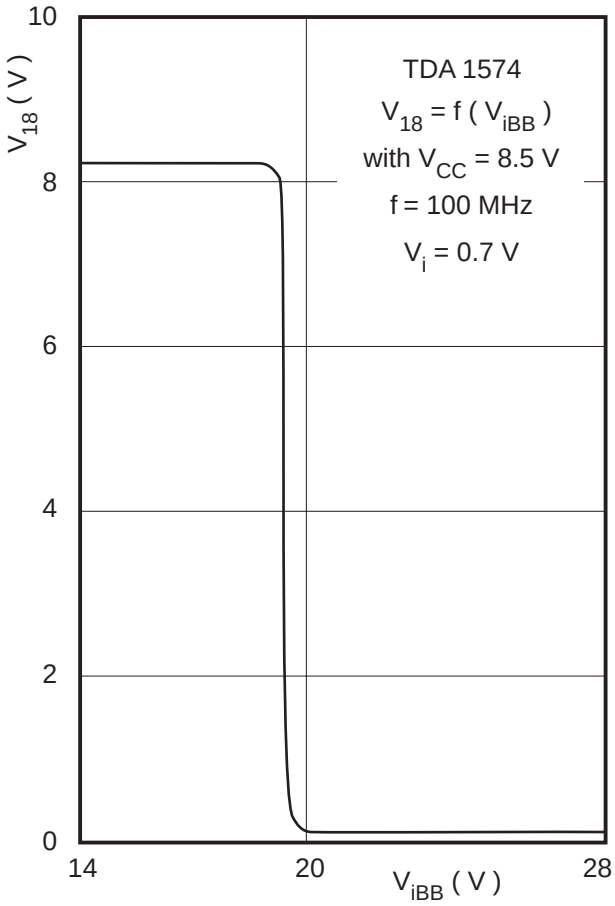
TDA 1574
$V_{18} = f (V_{iBB})$
with V_{CC} = 8.5 V
f = 100 MHz
V_i = 0.7 V
V_{18} (V)
10
8
6
4
2
0
14
20
28
V_{iBB} (V)

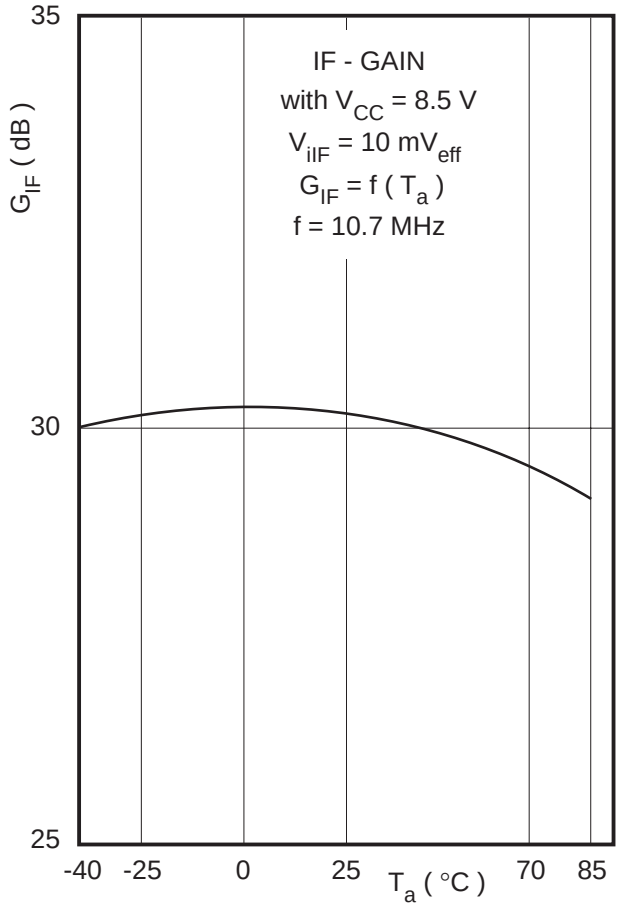
IF - GAIN
with V_{CC} = 8.5 V
V_{iIF} = 10 mV_{eff}
$G_{IF} = f (T_a)$
f = 10.7 MHz
G_{IF} (dB)
35
30
25
-40
-25
0
25
70
85
T_a (°C)

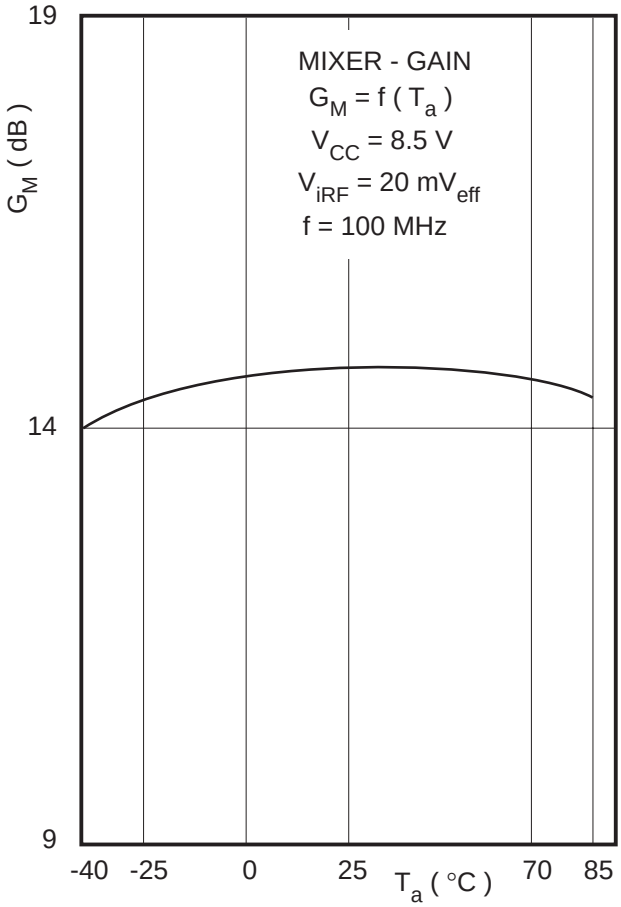
MIXER - GAIN
$G_M = f (T_a)$
V_{CC} = 8.5 V
V_{iRF} = 20 mV_{eff}
f = 100 MHz
G_M (dB)
19
14
9
-40
-25
0
25
70
85
T_a (°C)

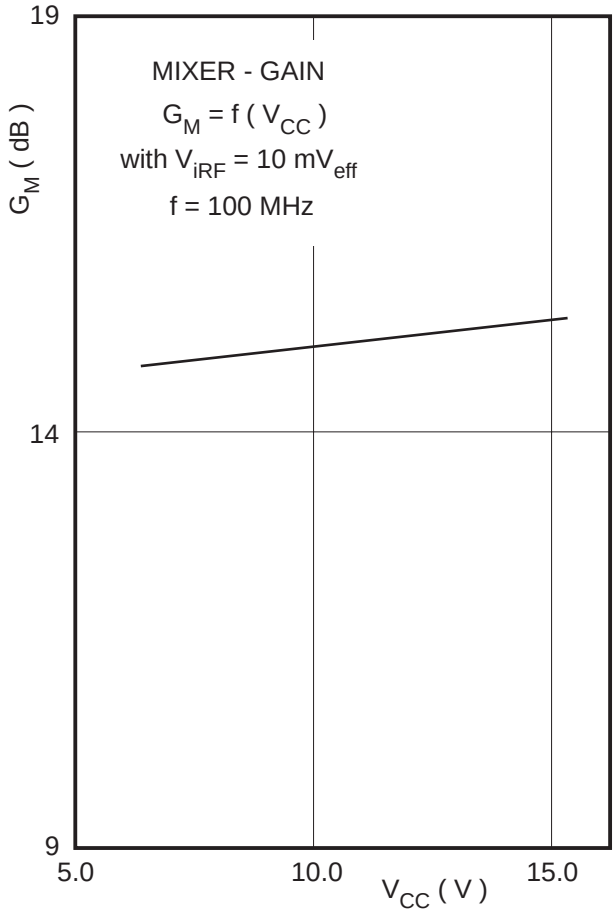
MIXER - GAIN
$G_M = f(V_{CC})$
with $V_{iRF} = 10\ mV_{eff}$
f = 100 MHz
G_M (dB)
19
14
9
5.0
10.0
15.0
V_{CC} (V)

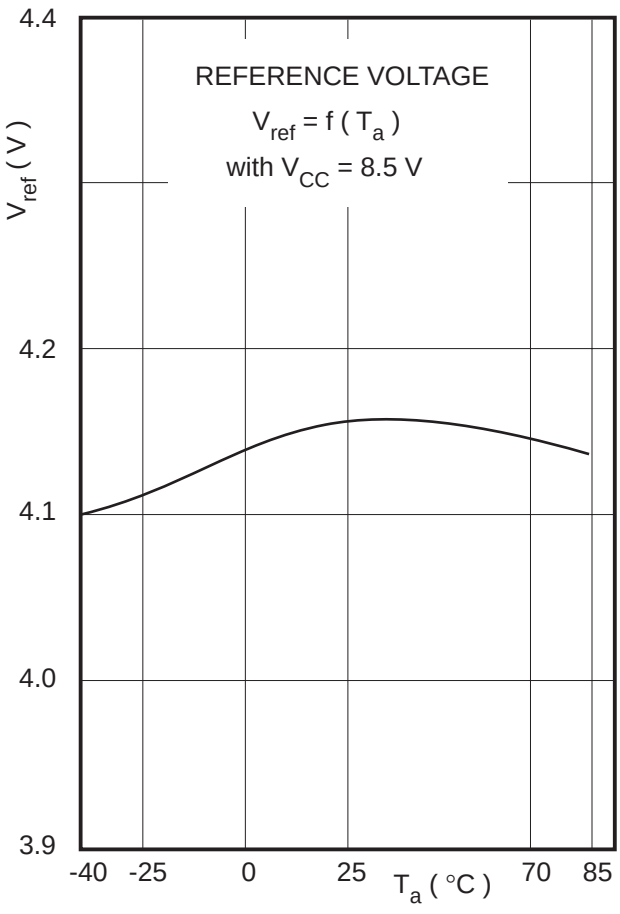
REFERENCE VOLTAGE
$V_{ref} = f(T_a)$
with V_{CC} = 8.5 V
V_{ref} (V)
4.4
4.2
4.1
4.0
3.9
-40
-25
0
25
70
85
T_a (°C)

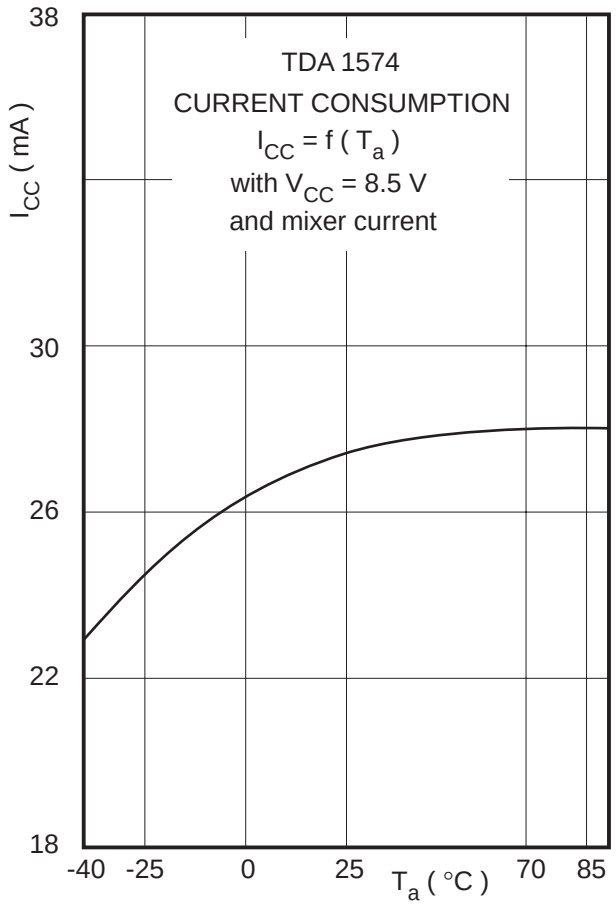
TDA 1574
CURRENT CONSUMPTION
$I_{CC} = f(T_a)$
with V_{CC} = 8.5 V
and mixer current
I_{CC} (mA)
38
30
26
22
18
-40
-25
0
25
70
85
T_a (°C)

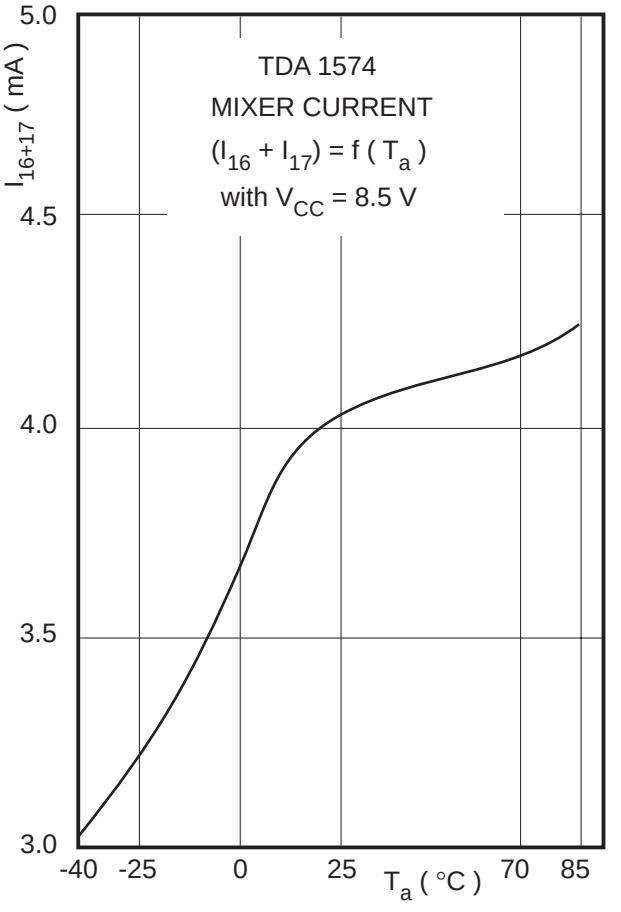
TDA 1574
MIXER CURRENT
$(I_{16} + I_{17}) = f(T_a)$
with V_{CC} = 8.5 V
I_{16+17} (mA)
5.0
4.5
4.0
3.5
3.0
-40
-25
0
25
70
85
T_a (°C)

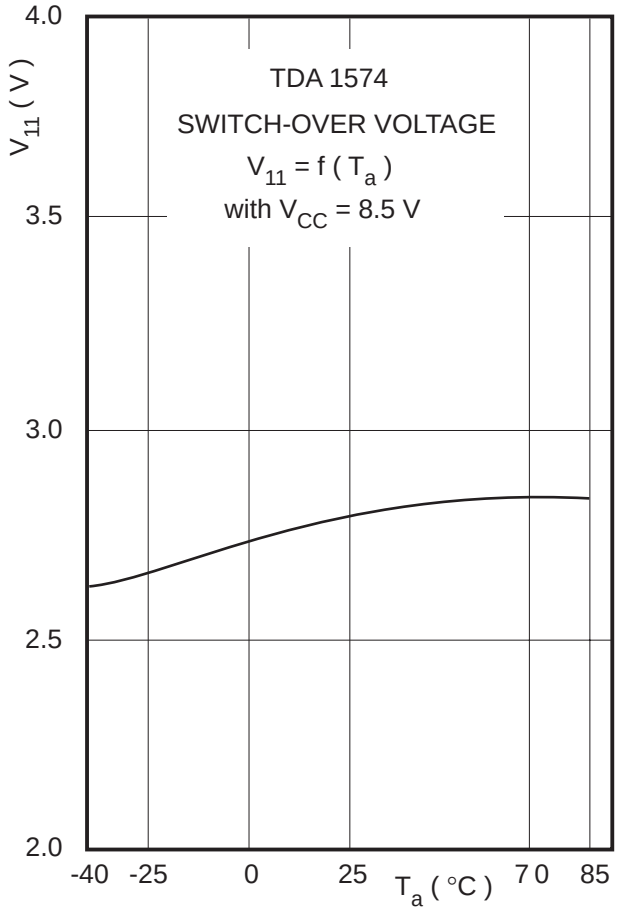
TDA 1574
SWITCH-OVER VOLTAGE
$V_{11} = f(T_a)$
with V_{CC} = 8.5 V
V_{11} (V)
4.0
3.5
3.0
2.5
2.0
-40
-25
0
25
70
85
T_a (°C)

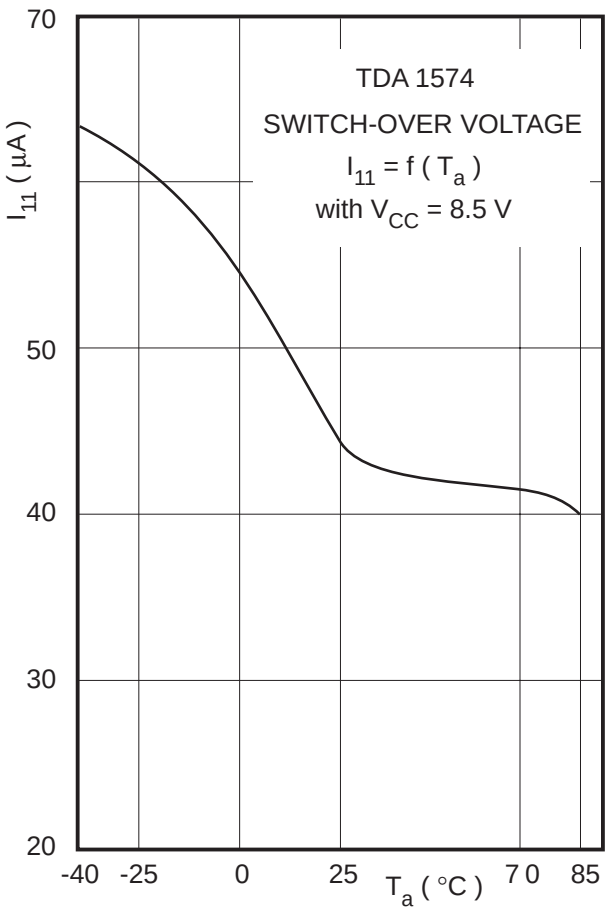
TDA 1574
SWITCH-OVER VOLTAGE
$I_{11} = f(T_a)$
with V_{CC} = 8.5 V
I_{11} (µA)
70
50
40
30
20
-40
-25
0
25
70
85
T_a (°C)

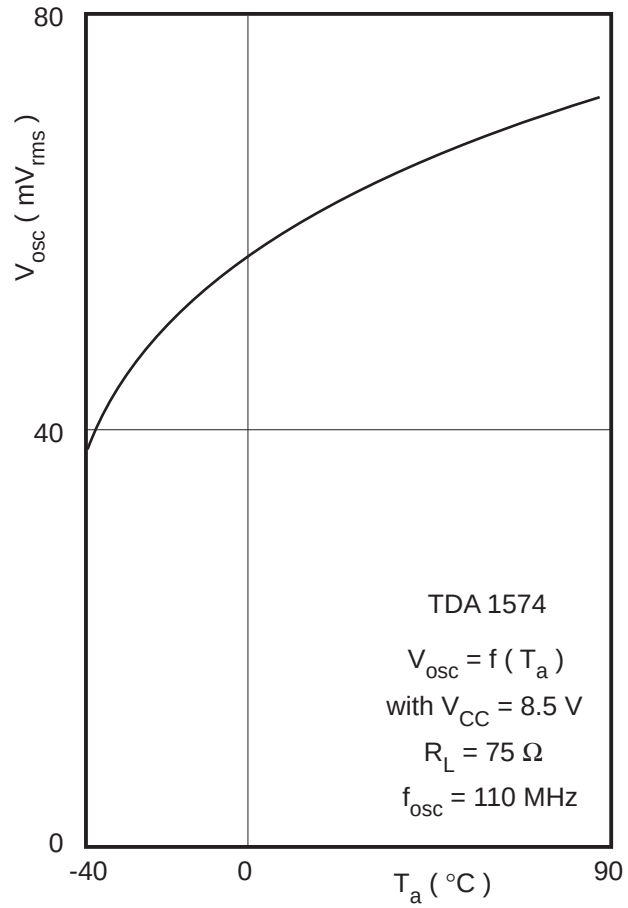
TDA 1574
$V_{osc} = f(T_a)$
with V_{CC} = 8.5 V
R_L = 75 Ω
f_{osc} = 110 MHz
V_{osc} (mV_{rms})
80
40
0
-40
0
90
T_a (°C)

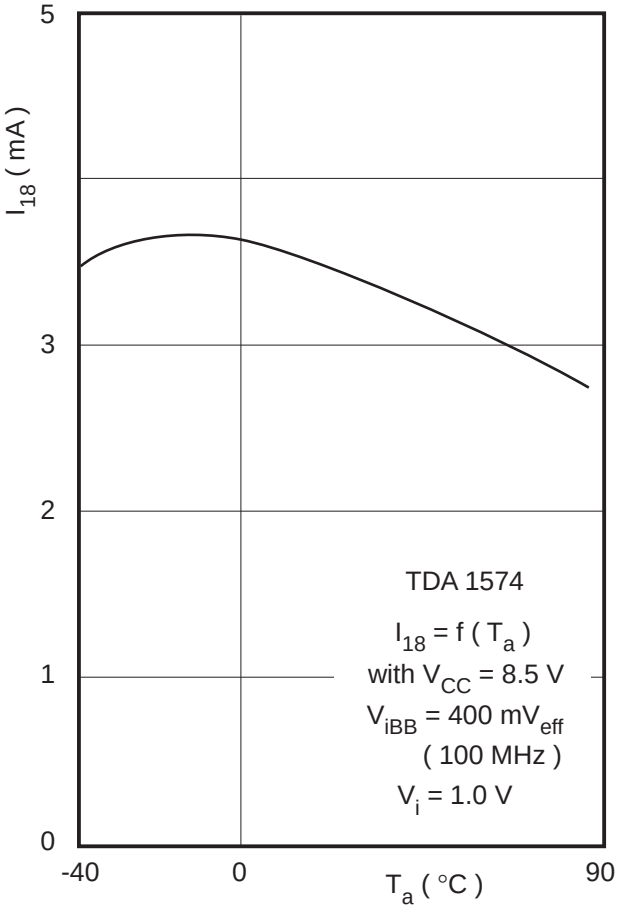
TDA 1574
$I_{18} = f(T_a)$
with V_{CC} = 8.5 V
V_{iBB} = 400 mV_{eff}
(100 MHz)
V_i = 1.0 V
I_{18} (mA)
5
3
2
1
0
-40
0
90
T_a (°C)

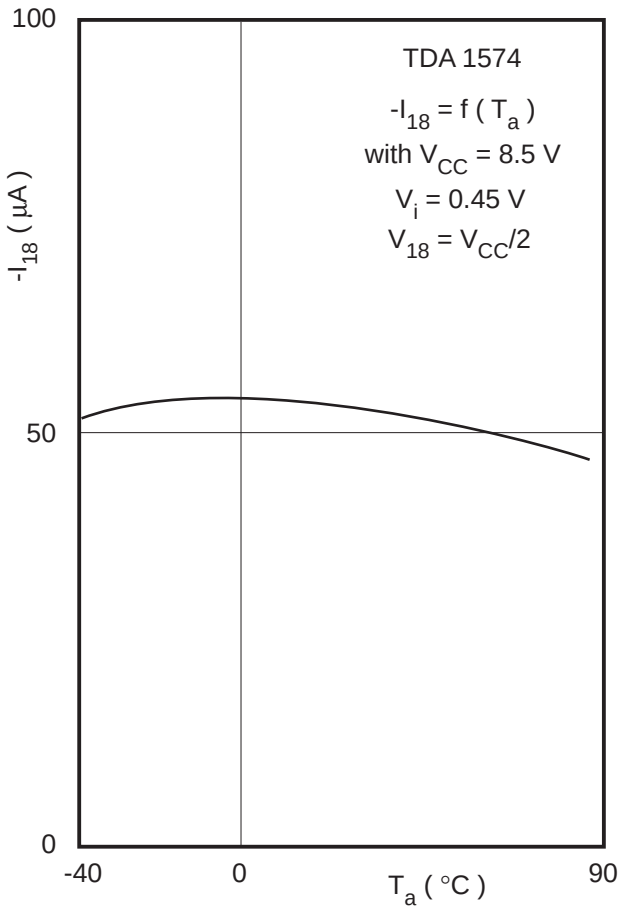

Application Examples

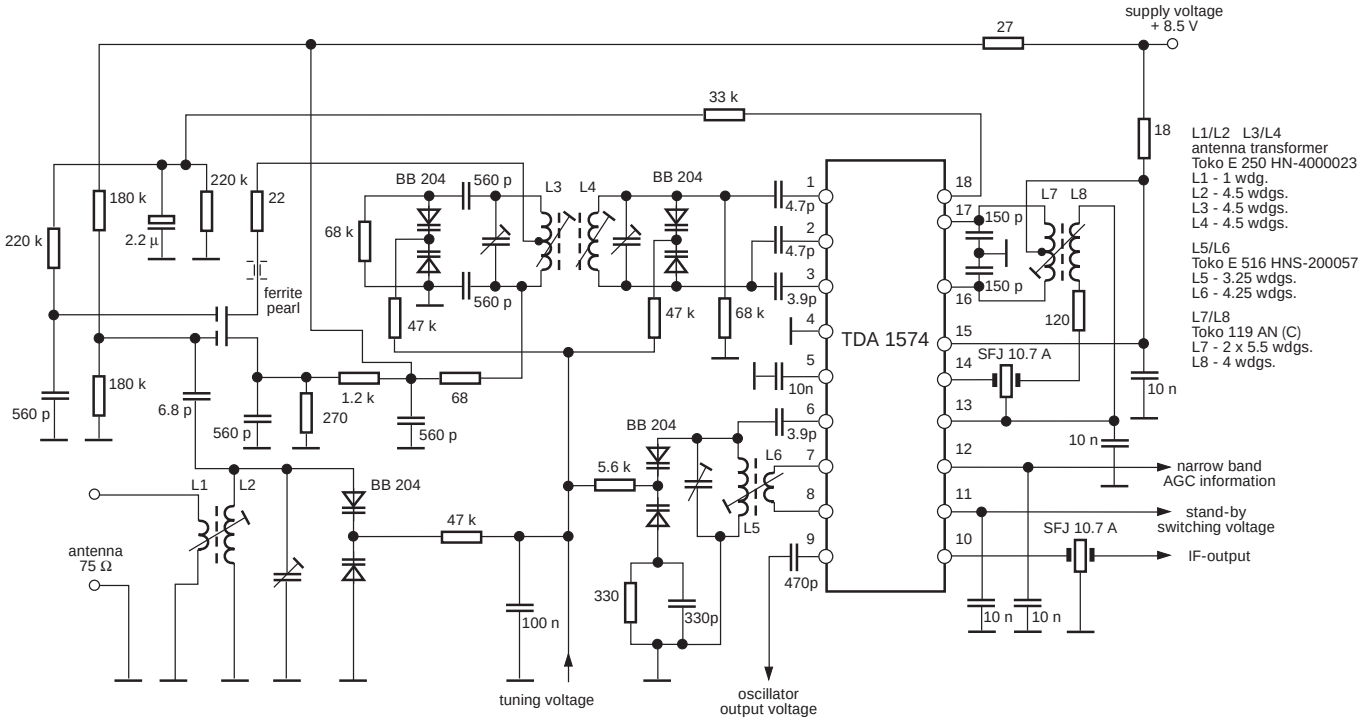

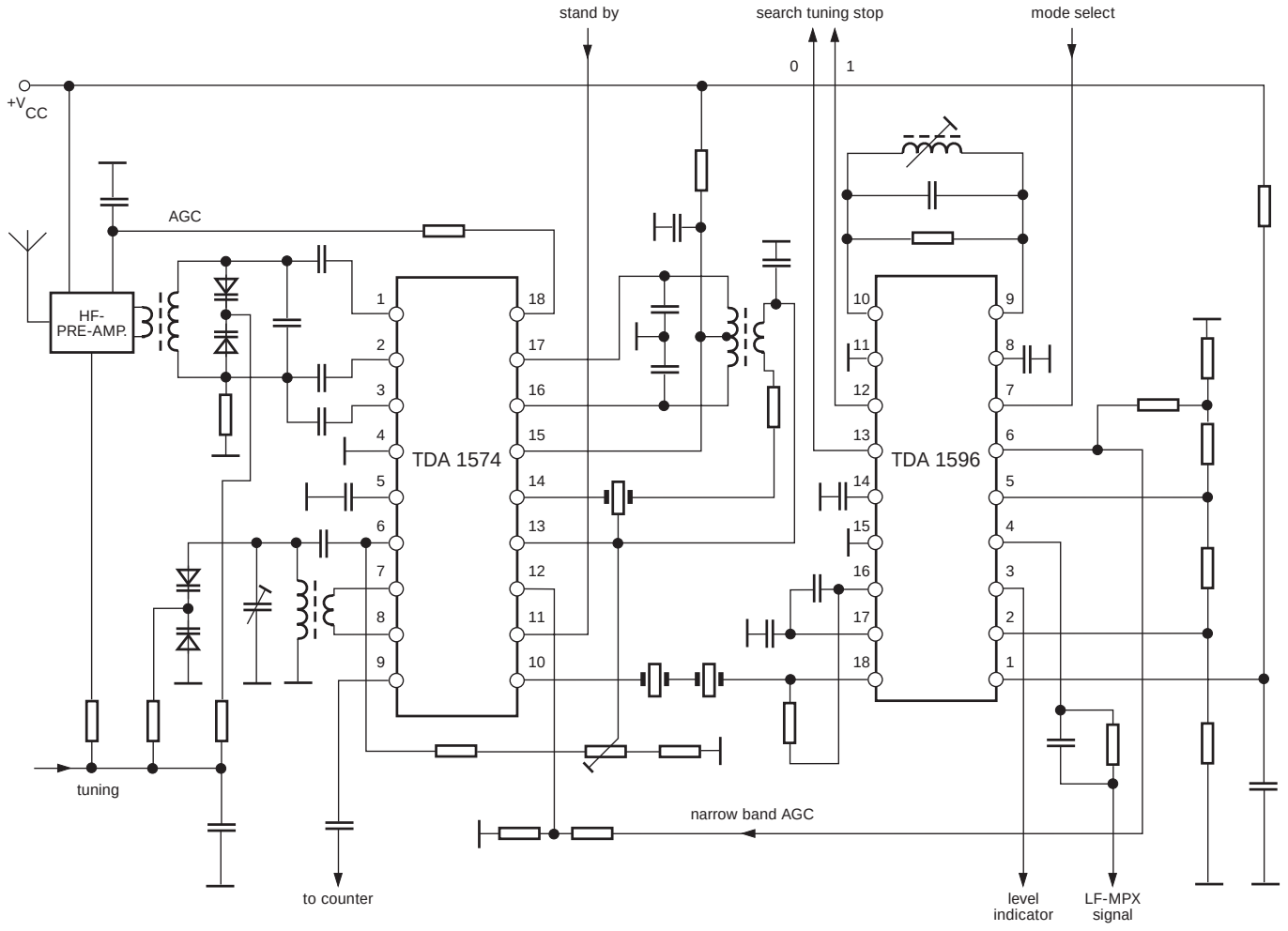

FM - front - end based on TDA1574 and TDA 1596

Application Hints

Plns 11 and 12 should be blocked to ground by in each case 10 nF in order to avoid unwanted signal injection.

The IF gain can be adjusted within the range between 10 dB and 82 dB by means of a dc voltage between 0.6 and 1.6 V at pin 3.

Start of the prestage AGC depends on the RF input voltage at pin 3 and on the dc voltage at pin 12. By appropriate selection of the effective share of the indication voltage at pin 12 the ratio of noise and large signal charasteristic can be optimized.