DATA SHEET

TDA1514A
50 W high performance hi-fi amplifier

Product specification
File under Integrated Circuits, IC01

May 1992

Philips
Semiconductors

PHILIPS

50 W high performance hi-fi amplifier TDA1514A

GENERAL DESCRIPTION

The TDA1514A integrated circuit is a hi-fi power amplifier for use as a building block in radio, tv and other audio applications. The high performance of the IC meets the requirements of digital sources (e.g. Compact Disc equipment).

The circuit is totally protected, the two output transistors both having thermal and SOAR protection (see Fig.3). The circuit also has a mute function that can be arranged for a period after power-on with a delay time fixed by external components.

The device is intended for symmetrical power supplies but an asymmetrical supply may also be used.

Features

- High output power
- Low harmonic distortion
- Low intermodulation distortion
- Low offset voltage
- Good ripple rejection
- Mute/stand-by facilities
- Thermal protection
- Protected against electrostatic discharge
- No switch-on or switch-off clicks
- Very low thermal resistance
- Safe Operating Area (SOAR) protection.

QUICK REFERENCE DATA

PARAMETER	CONDITIONS	SYMBOL	MIN.	TYP.	MAX.	UNIT
Supply voltage range (pin 6 to pin 4)		V_P	± 10	–	± 30	V
Total quiescent current	V_P = ± 27.5 V	I_{tot}	–	56	–	mA
Output power	THD = –60 dB; V_P = ± 27.5 V; R_L = 8 Ω	P_o	–	40	–	W
	V_P = ± 23 V; R_L = 4 Ω	P_o	–	48	–	W
Closed loop voltage gain	determined externally	G_c	–	30	–	dB
Input resistance	determined externally	R_i	–	20	–	kΩ
Signal plus noise-to-noise ratio	P_o = 50 mW	(S+N)/N	–	83	–	dB
Supply voltage ripple rejection	f = 100 Hz	SVRR	–	64	–	dB

PACKAGE OUTLINE

9-lead SIL, plastic power (SOT131R); SOT131-2; 1996 July 19.

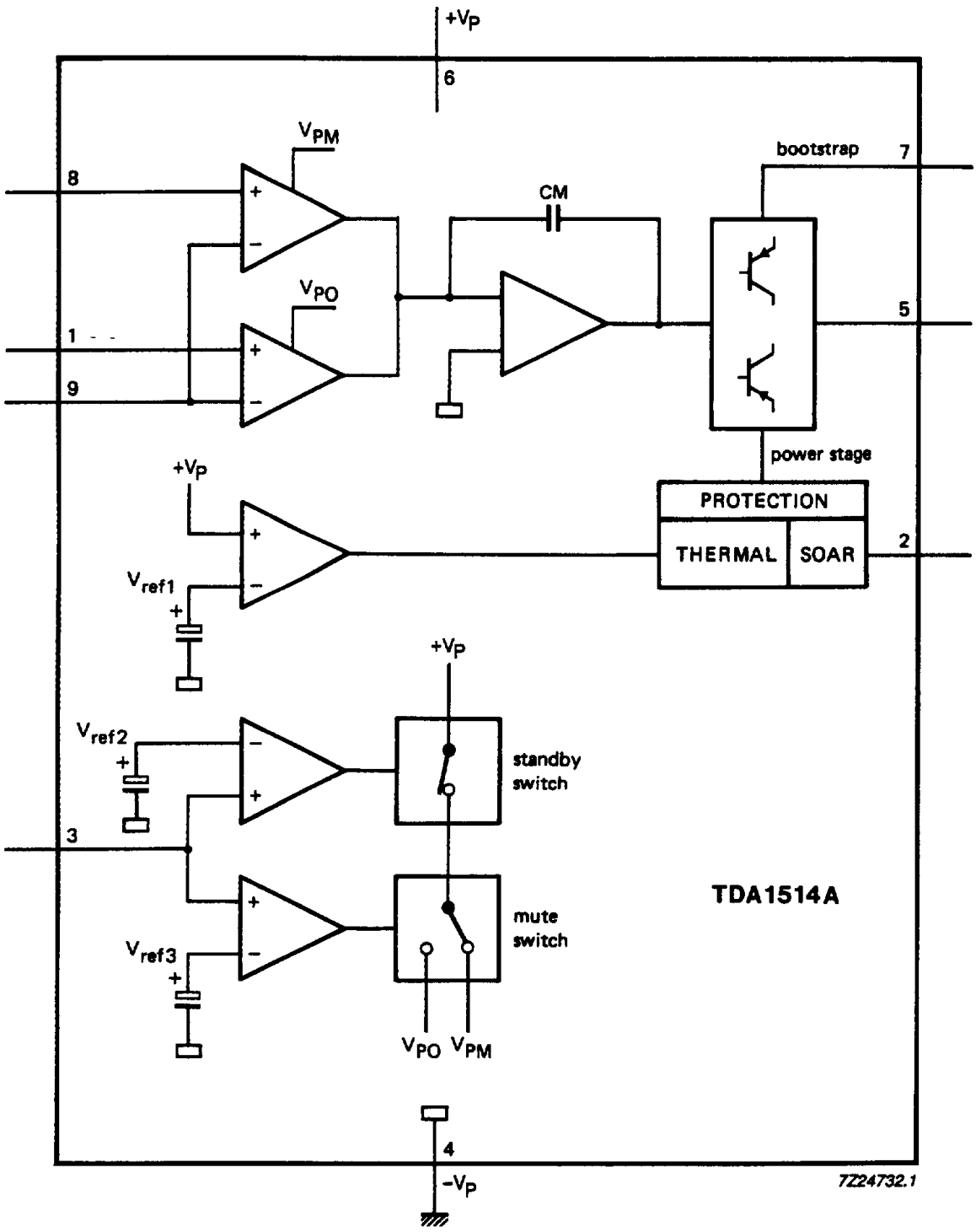

Fig.1 Block diagram.

RATINGS

Limiting values in accordance with the Absolute Maximum Rating System (IEC 134)

PARAMETER	SYMBOL	MIN.	MAX.	UNIT
Supply voltage (pin 6 to pin 4)	V_P	–	± 30	V
Bootstrap voltage (pin 7 to pin 4)	V_{bstr}	–	70	V
Output current (repetitive peak)	I_o	–	8	A
Operating ambient temperature range	T_{amb}	see Fig.2		
Storage temperature range	T_{stg}	–55	+ 150	°C
Power dissipation		see Fig.2		
Thermal shut-down protection time	t_{pr}	–	1	hour
Mute voltage (pin 3 to pin 4)	V_m	–	7.25	V

THERMAL RESISTANCE

From junction to mounting base $R_{th\ j\text{-}mb}$ 1 K/W

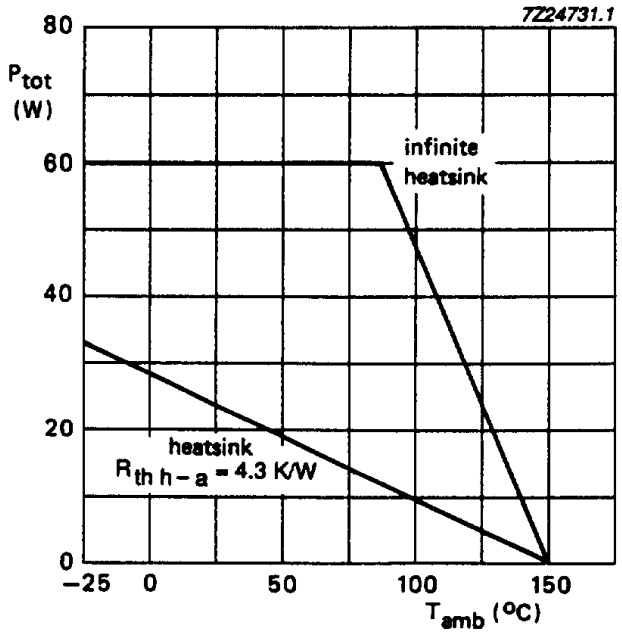

Fig.2 Power derating curve.

The theoretical maximum power dissipation for P_o = 40 W with a stabilized power supply is:

$$\frac{V_P^2}{2\pi^2 R_L} = 19 \text{ W; where } V_P = \pm 27.5 \text{ V; } R_L = 8\ \Omega$$

Considering, for example, a maximum ambient temperature of 50 °C and a maximum junction temperature of 150 °C the total thermal resistance is:

$$R_{th\ j\text{-}a} = \frac{150 - 50}{19} = 5.3 \text{ K/W}$$

Since the thermal resistance of the SOT131A encapsulation is $R_{th\ j\text{-}mb}$ < 1 K/W, the thermal resistance required of the heatsink is $R_{th\ h\text{-}a}$ < 4.3 K/W.

SAFE OPERATING AREA (SOAR) PROTECTION

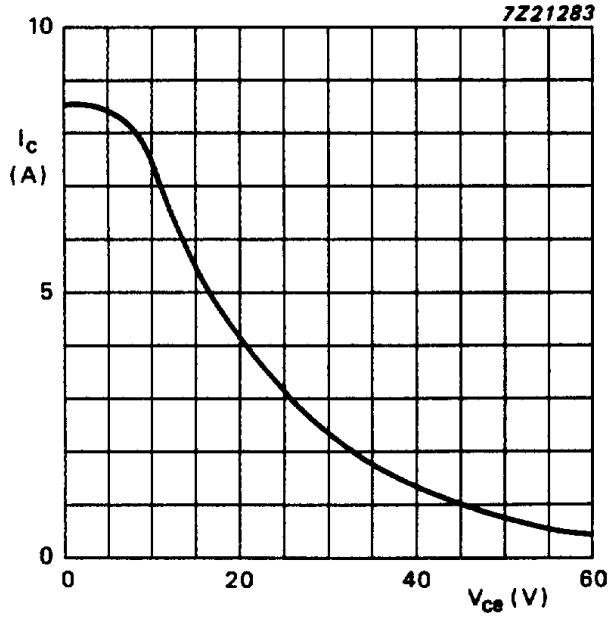

Fig.3 SOAR protection curve.

CHARACTERISTICS

$V_P = \pm 27.5$ V; $R_L = 8\ \Omega$; f = 1 kHz; $T_{amb} = 25$ °C; test circuit as Fig.4; unless otherwise specified.

PARAMETER	CONDITIONS	SYMBOL	MIN.	TYP.	MAX.	UNIT
Supply voltage range						
(pin 6 to pin 4)		V_P	± 10	–	± 30	V
Maximum output current						
(peak value)		$I_{OM\ max}$	6.4	–	–	A
Operating state						
Voltage (pins 3 to 4)		V_{3-4}	6	–	7.25	V
Total quiescent current	$R_L = \infty$	I_{tot}	30	56	90	mA
Output power	THD = –60 dB	P_o	37	40	–	W
	THD = –20 dB	P_o	–	51	–	W
Output power	$V_P = \pm 23$ V;					
	THD = –60 dB					
	$R_L = 8\ \Omega$	P_o	–	28	–	W
	$R_L = 4\ \Omega$	P_o	–	48	–	W
Total harmonic distortion	P_o = 32 W	THD	–	–90	–80	dB
Intermodulation distortion	P_o = 32 W					
	note 1	d_{im}	–	–86	–	dB
Power bandwidth	(–3 dB);					
	THD = –60 dB	B	–	20 to		
				25 000		Hz
Slew rate		dV/dt	–	14	–	V/μs
Closed loop voltage gain	note 2	G_c	–	30	–	dB
Open loop voltage gain		G_o	–	89	–	dB
Input impedance	note 3	$\|Z_i\|$	1	–	–	MΩ
Signal-to-noise ratio	note 4					
	P_o = 50 mW	S/N	80	83	–	dB
Output offset voltage		V_o	–	7	200	mV
Input bias current		I_I	–	0.1	1.0	μA
Output impedance		$\|Z_o\|$	–	–	0.1	Ω
Supply voltage ripple						
rejection	note 5	SVRR	58	64	–	dB
Quiescent current into pin 2	note 6	I_2	–	0.1	–	μA

PARAMETER	CONDITIONS	SYMBOL	MIN.	TYP.	MAX.	UNIT
Mute state						
Voltage on pin 3		V_{3-4}	2	–	4.5	V
Offset voltage		V_o	–	30	200	V
Output voltage	$V_{i(rms)}$ = 1 V					
	f = 1 kHz	V_o	–	450	–	μV
Ripple rejection	note 5	RR	–	60	–	dB
Standby state						
Voltage on pin 3		V_{3-4}	0	–	0.9	V
Total quiescent current		I_{tot}	–	18	25	mA
Ripple rejection	notes 5 and 7	RR	–	60	–	dB
Supply voltage to obtain						
standby state		$\pm V_P$	5.0	–	7.0	V

Notes to the characteristics

1. Measured with two superimposed signals of 50 Hz and 7 kHz with an amplitude relationship of 4 : 1.
2. The closed loop gain is determined by external resistors (Fig.4, R2 and R3) and is variable between 20 and 46 dB.
3. The input impedance in the test circuit (Fig.4) is determined by the bias resistor R1.
4. The noise output voltage is measured in a bandwidth of 20 Hz to 20 kHz with a source resistance of 2 kΩ.
5. f = 100 Hz; R_S = 2 kΩ; ripple voltage = 500 $mV_{(eff)}$ on positive and negative supply.
6. The quiescent current into pin 2 has an impact on the mute time.
7. Without bootstrap.

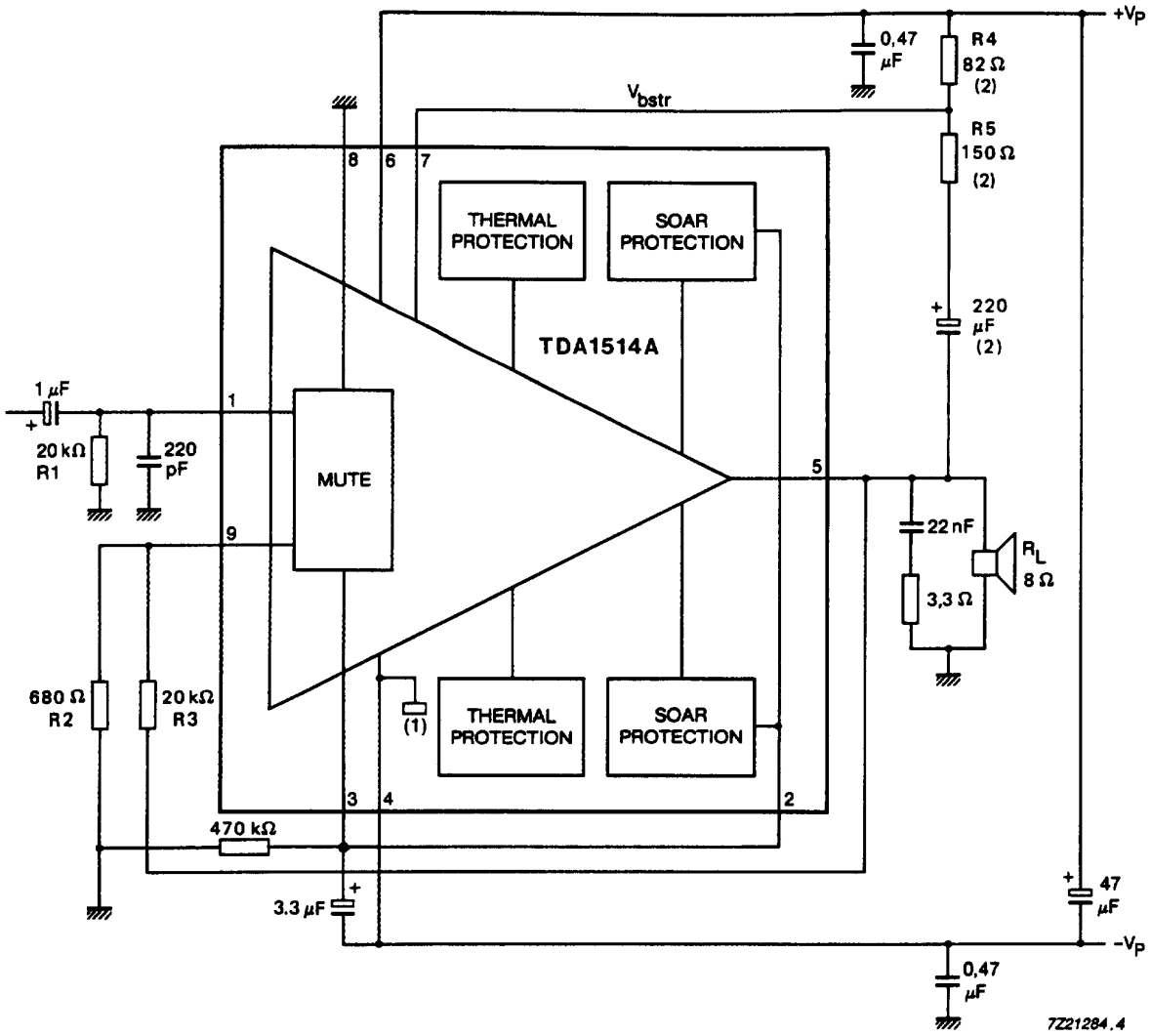

(1) Mounting base to connected to $-V_P$.

(2) When used without a bootstrap these components are disconnected and pin 6 is connected to pin 7 thus decreasing the output power by approximately 4 W.

(3) When R_L = 4 Ω: R4 = 47 Ω and R5 = 82 Ω.

Fig.4 Application and test circuit.

PACKAGE OUTLINE

SIL9P: plastic single in-line power package; 9 leads **SOT131-2**

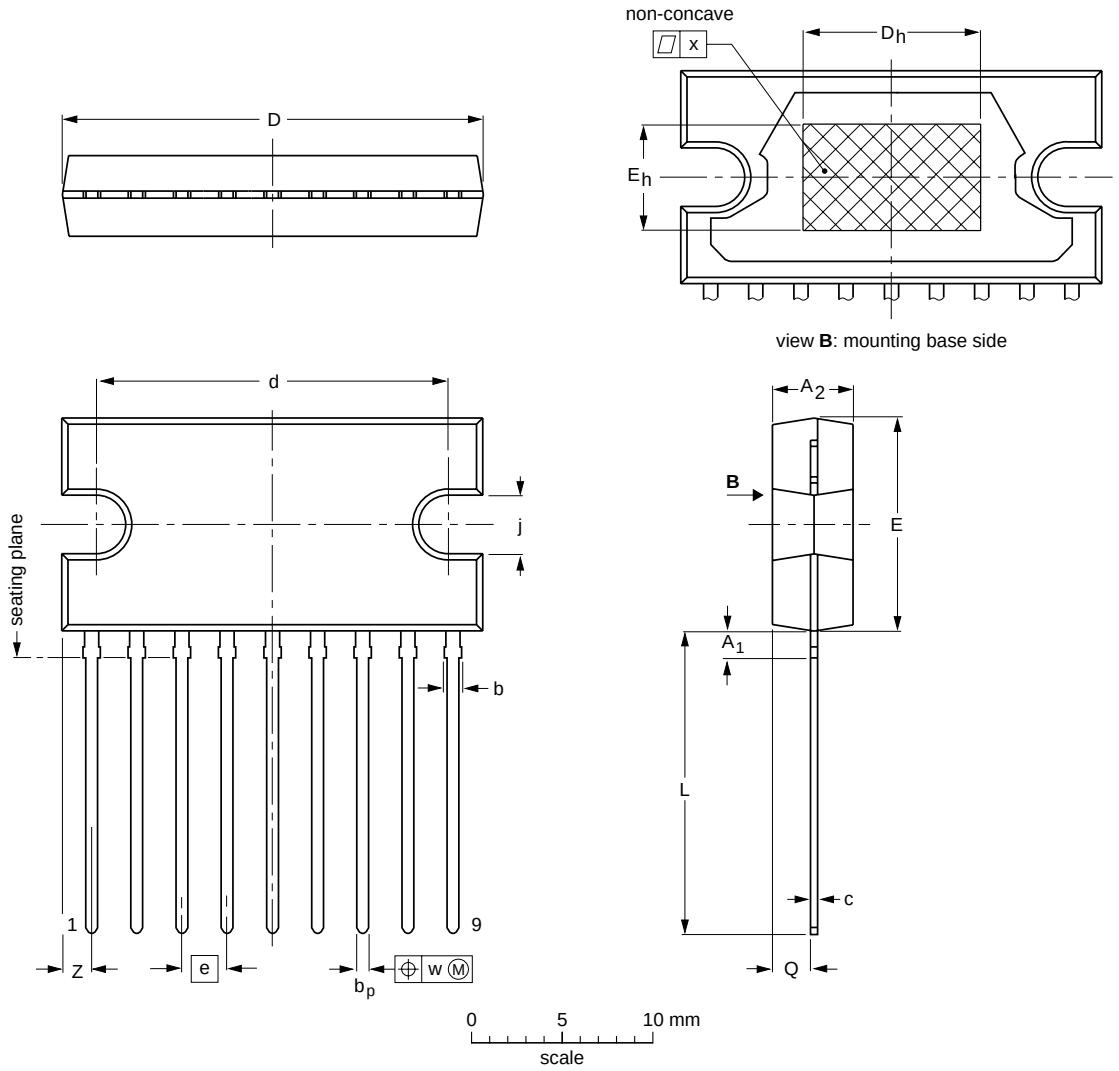

DIMENSIONS (mm are the original dimensions)

UNIT	A_1 max.	A_2	b max.	b_p	c	$D^{(1)}$	d	D_h	$E^{(1)}$	e	E_h	j	L	Q	w	x	$Z^{(1)}$
mm	2.0	4.6 4.2	1.1	0.75 0.60	0.48 0.38	24.0 23.6	20.0 19.6	10	12.2 11.8	2.54	6	3.4 3.1	17.2 16.5	2.1 1.8	0.25	0.03	2.00 1.45

Note

1. Plastic or metal protrusions of 0.25 mm maximum per side are not included.

OUTLINE VERSION	REFERENCES				EUROPEAN PROJECTION	ISSUE DATE
	IEC	JEDEC	EIAJ			
SOT131-2						~~92-11-17~~ 95-03-11

SOLDERING

Introduction

There is no soldering method that is ideal for all IC packages. Wave soldering is often preferred when through-hole and surface mounted components are mixed on one printed-circuit board. However, wave soldering is not always suitable for surface mounted ICs, or for printed-circuits with high population densities. In these situations reflow soldering is often used.

This text gives a very brief insight to a complex technology. A more in-depth account of soldering ICs can be found in our *"IC Package Databook"* (order code 9398 652 90011).

Soldering by dipping or by wave

The maximum permissible temperature of the solder is 260 °C; solder at this temperature must not be in contact with the joint for more than 5 seconds. The total contact time of successive solder waves must not exceed 5 seconds.

The device may be mounted up to the seating plane, but the temperature of the plastic body must not exceed the specified maximum storage temperature ($T_{stg\ max}$). If the printed-circuit board has been pre-heated, forced cooling may be necessary immediately after soldering to keep the temperature within the permissible limit.

Repairing soldered joints

Apply a low voltage soldering iron (less than 24 V) to the lead(s) of the package, below the seating plane or not more than 2 mm above it. If the temperature of the soldering iron bit is less than 300 °C it may remain in contact for up to 10 seconds. If the bit temperature is between 300 and 400 °C, contact may be up to 5 seconds.

DEFINITIONS

Data sheet status	
Objective specification	This data sheet contains target or goal specifications for product development.
Preliminary specification	This data sheet contains preliminary data; supplementary data may be published later.
Product specification	This data sheet contains final product specifications.
Limiting values	
Limiting values given are in accordance with the Absolute Maximum Rating System (IEC 134). Stress above one or more of the limiting values may cause permanent damage to the device. These are stress ratings only and operation of the device at these or at any other conditions above those given in the Characteristics sections of the specification is not implied. Exposure to limiting values for extended periods may affect device reliability.	
Application information	
Where application information is given, it is advisory and does not form part of the specification.	

LIFE SUPPORT APPLICATIONS

These products are not designed for use in life support appliances, devices, or systems where malfunction of these products can reasonably be expected to result in personal injury. Philips customers using or selling these products for use in such applications do so at their own risk and agree to fully indemnify Philips for any damages resulting from such improper use or sale.