Matched Pairs of Emitters and Detectors

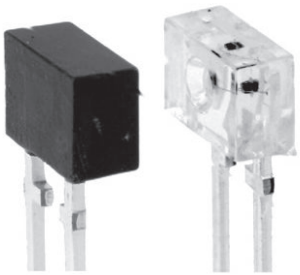

96 12317_1

FEATURES

- Package type: leaded
- Detector type: phototransistor
- Dimensions (L x W x H in mm): 4.4 x 2 x 3
- Typical output current under test: I_C = 0.5 mA
- Daylight blocking filter
- Emitter wavelength: 950 nm
- Angle of half intensity: φ = ± 25°
- S420P: single detector component (dark epoxy)
- V420P: single emitter component (clear epoxy)
- Lead (Pb)-free soldering released
- Compliant to RoHS Directive 2002/95/EC and in accordance to WEEE 2002/96/EC

Pb-free

e4

RoHS COMPLIANT

GREEN (5-2008)**

DESCRIPTION

The TCZT8020 include matched infrared emitters and phototransistors in leaded packages, used to assemble custom-designed transmissive sensors or reflective sensors. The phototransistor package blocks visible light.

APPLICATIONS

- Custom-design sensors for various distances
- Reflective sensors
- Transmissive sensors

PRODUCT SUMMARY			
PART NUMBER	GAP WIDTH (mm)	TYPICAL OUTPUT CURRENT UNDER TEST (1) (mA)	DAYLIGHT BLOCKING FILTER INTEGRATED
TCZT8020	Variable	0.5	Yes

Note

(1) Conditions like in table basic characteristics/coupler

ORDERING INFORMATION			
ORDERING CODE	PACKAGING	VOLUME (1)	REMARKS
TCZT8020	Bulk	MOQ: 2000 pairs, 1000 pcs/bulk	Detectors and emitters in separate bulk

Note

(1) MOQ: minimum order quantity

** Please see document “Vishay Material Category Policy”: www.vishay.com/doc?99902

This datasheet is subject to change without notice.
THE PRODUCT DESCRIBED HEREIN AND THIS DATASHEET ARE SUBJECT TO SPECIFIC DISCLAIMERS, SET FORTH AT www.vishay.com/doc?91000

ABSOLUTE MAXIMUM RATINGS (T_{amb} = 25 °C, unless otherwise specified)				
PARAMETER	**TEST CONDITION**	**SYMBOL**	**VALUE**	**UNIT**
COUPLER				
Ambient temperature range		T_{amb}	- 55 to + 85	°C
Storage temperature range		T_{stg}	- 55 to + 100	°C
Soldering temperature	Distance to package 2 mm, t ≤ 5 s	T_{sd}	260	°C
INPUT (EMITTER)				
Reverse voltage		V_R	6	V
Forward current		I_F	60	mA
Forward surge current	t ≤ 10 µs	I_{FSM}	1	A
Power dissipation	T_{amb} ≤ 25 °C	P_V	100	mW
Junction temperature		T_j	100	°C
OUTPUT (DETECTOR)				
Collector emitter voltage		V_{CEO}	70	V
Emitter collector voltage		V_{ECO}	7	V
OUTPUT (DETECTOR)				
Collector current		I_C	50	mA
Collector peak current	t_p/T = 0.5, t ≤ 10 ms	I_{CM}	100	mA
Power dissipation	T_{amb} ≤ 25 °C	P_V	150	mW
Junction temperature		T_j	100	°C

ABSOLUTE MAXIMUM RATINGS

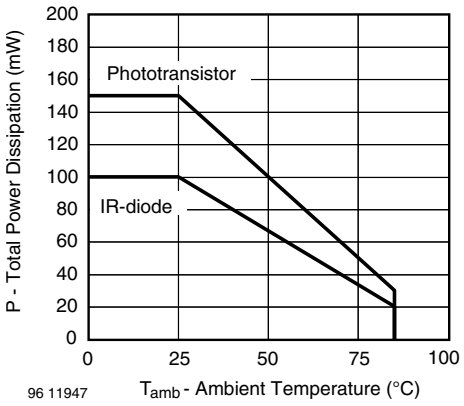

Fig. 1 - Power Dissipation Limit vs. Ambient Temperature

This datasheet is subject to change without notice.
THE PRODUCT DESCRIBED HEREIN AND THIS DATASHEET ARE SUBJECT TO SPECIFIC DISCLAIMERS, SET FORTH AT www.vishay.com/doc?91000

BASIC CHARACTERISTICS (T_{amb} = 25 °C, unless otherwise specified)						
PARAMETER	**TEST CONDITION**	**SYMBOL**	**MIN.**	**TYP.**	**MAX.**	**UNIT**
COUPLER						
Collector current	V_{CE} = 5 V, I_F = 20 mA, d = 4 mm (1)	I_C	0.25	0.5		mA
I_C/I_F	V_{CE} = 5 V, I_F = 20 mA, d = 4 mm	CTR	1.25	2.5		%
Collector emitter saturation voltage	I_F = 20 mA, I_C = 25 µA	V_{CEsat}			0.4	V
Cut-off frequency	I_F = 10 mA, V_{CE} = 5 V, R_L = 100 Ω	f_C		110		kHz
INPUT (EMITTER)						
Forward voltage	I_F = 50 mA	V_F		1.25	1.6	V
Radiant intensity	I_F = 60 mA, t_P = 20 ms	I_e			7.8	mW/sr
Peak wavelength	I_F = 100 mA	λ_P	940			nm
Virtual source diameter	DIN EN ISO 1146/1:2005	d		1.1		mm
OUTPUT (DETECTOR)						
Collector emitter voltage	I_C = 1 mA	V_{CEO}	70			V
Emitter collector voltage	I_E = 100 µA	V_{ECO}	7			V
Collector dark current	V_{CE} = 25 V, I_F = 0 A, E = 0 lx	I_{CEO}			100	nA
SWITCHING CHARACTERISTICS						
Turn-on time	V_S = 5 V, I_C = 1 mA, R_L = 100 Ω (see figure 10)	t_{on}		15		µs
Turn-off time	V_S = 5 V, I_C = 1 mA, R_L = 100 Ω (see figure 10)	t_{off}		10		µs

Note

(1) Characteristics are measurement with d = 4 mm (0.55") distance between emitter and detector, within a common axis of 0.5 mm (0.02") and with parallel alignment within 5°

BASIC CHARACTERISTICS (T_{amb} = 25 °C, unless otherwise specified)

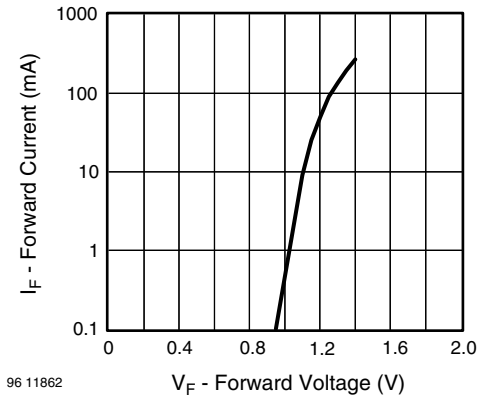

Fig. 2 - Forward Current vs. Forward Voltage

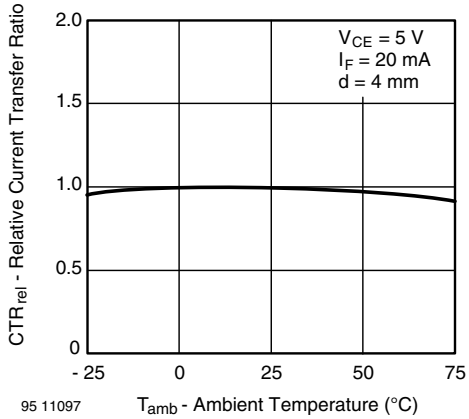

Fig. 3 - Relative Current Transfer Ratio vs. Ambient Temperature

This datasheet is subject to change without notice.
THE PRODUCT DESCRIBED HEREIN AND THIS DATASHEET ARE SUBJECT TO SPECIFIC DISCLAIMERS, SET FORTH AT www.vishay.com/doc?91000

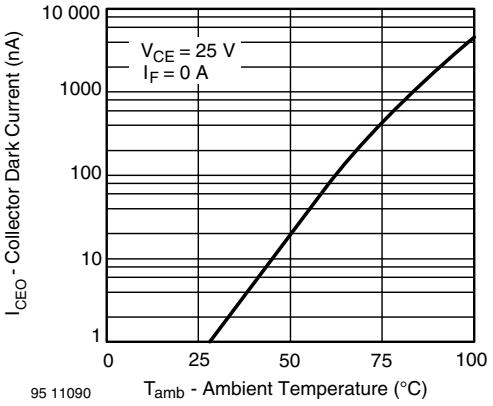

Fig. 4 - Collector Dark Current vs. Ambient Temperature

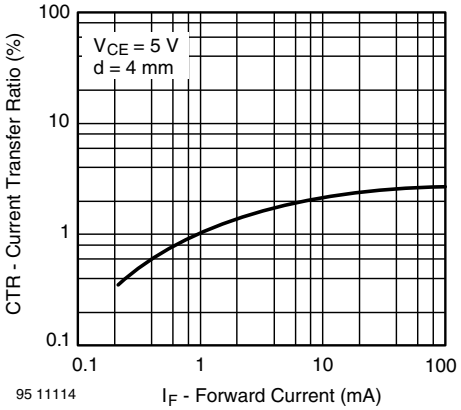

Fig. 7 - Current Transfer Ratio vs. Forward Current

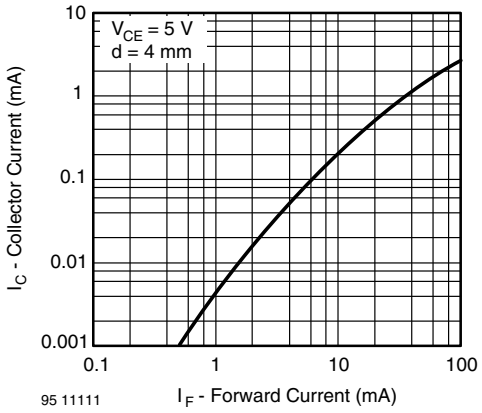

Fig. 5 - Collector Current vs. Forward Current

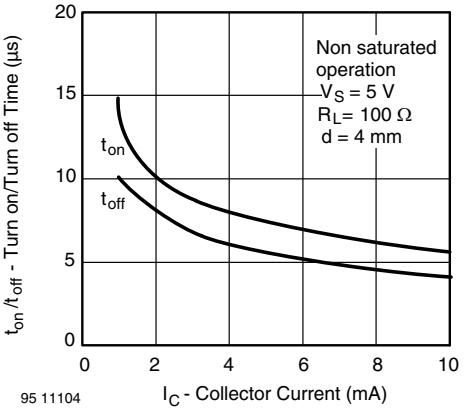

Fig. 8 - Turn on/off Time vs. Forward Current

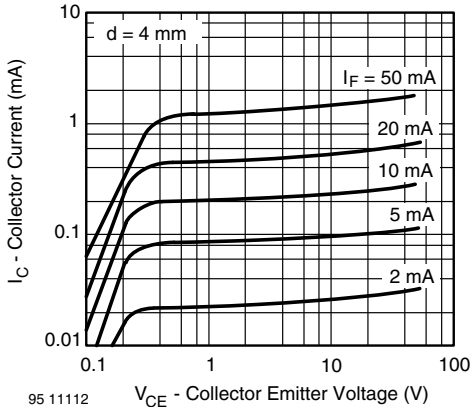

Fig. 6 - Collector Current vs. Collector Emitter Voltage

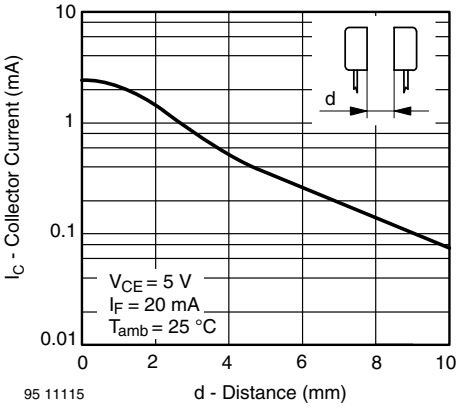

Fig. 9 - Collector Current vs. Distance

This datasheet is subject to change without notice.
THE PRODUCT DESCRIBED HEREIN AND THIS DATASHEET ARE SUBJECT TO SPECIFIC DISCLAIMERS, SET FORTH AT www.vishay.com/doc?91000

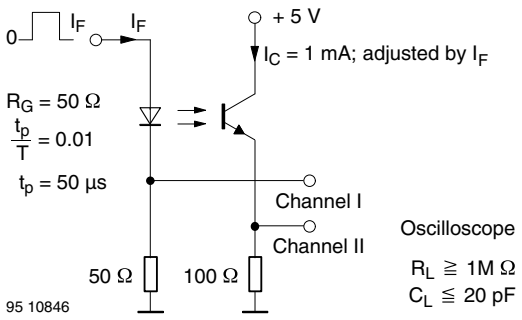

Fig. 10 - Pulse Diagram

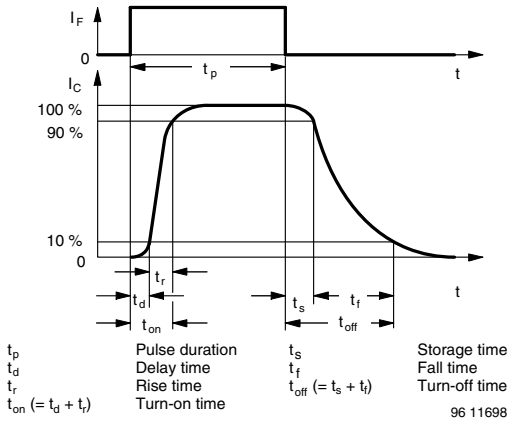

Fig. 11 - Switching Times

PACKAGE DIMENSIONS in millimeters

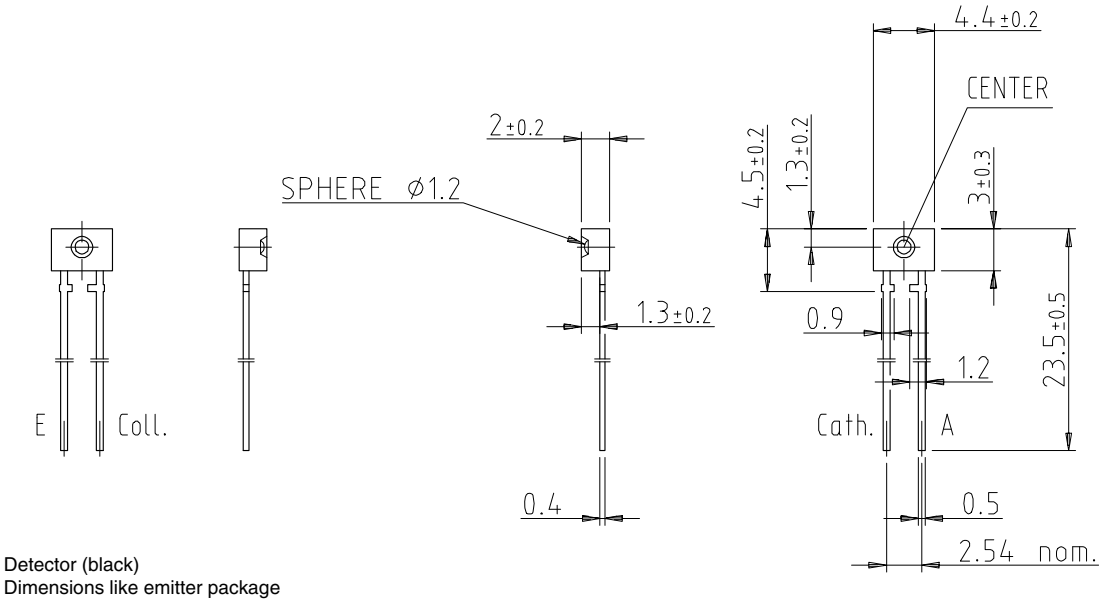

This datasheet is subject to change without notice.
THE PRODUCT DESCRIBED HEREIN AND THIS DATASHEET ARE SUBJECT TO SPECIFIC DISCLAIMERS, SET FORTH AT www.vishay.com/doc?91000

Packaging and Ordering Information

PART NUMBER	MOQ (1)	PCS PER TUBE	TUBE SPEC. (FIGURE)	CONSTITUENTS (FORMS)
CNY70	4000	80	1	28
TCPT1300X01	2000	Reel	(2)	29
TCRT1000	1000	Bulk	-	26
TCRT1010	1000	Bulk	-	26
TCRT5000	4500	50	2	27
TCRT5000L	2400	48	3	27
TCST1030	5200	65	5	24
TCST1030L	2600	65	6	24
TCST1103	1020	85	4	24
TCST1202	1020	85	4	24
TCST1230	4800	60	7	24
TCST1300	1020	85	4	24
TCST2103	1020	85	4	24
TCST2202	1020	85	4	24
TCST2300	1020	85	4	24
TCST5250	4860	30	8	24
TCUT1300X01	2000	Reel	(2)	29
TCZT8020-PAER	2500	Bulk	-	22

Notes

(1) MOQ: minimum order quantity

(2) Please refer to datasheets

TUBE SPECIFICATION FIGURES

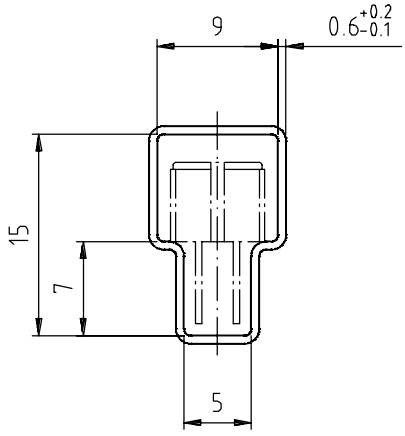

With rubber stopper
Tolerance: ±0.5mm
Length: 575±1mm

Drawing-No.: 9.700-5097.01-4
Issue: 1; 25.02.00

15198

Fig. 1

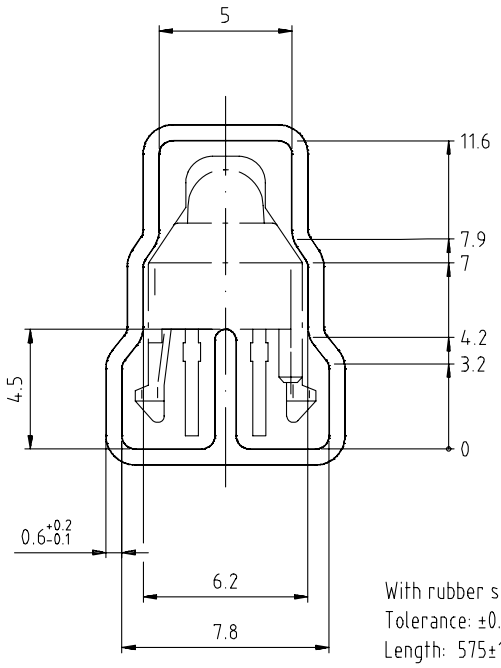

Drawing-No.: 9.700-5139.01-4
Issue: 1; 10.05.00

With rubber stopper
Tolerance: ±0.5mm
Length: 575±1mm

Drawing refers to following types: TCRT 5000

15210

Fig. 2

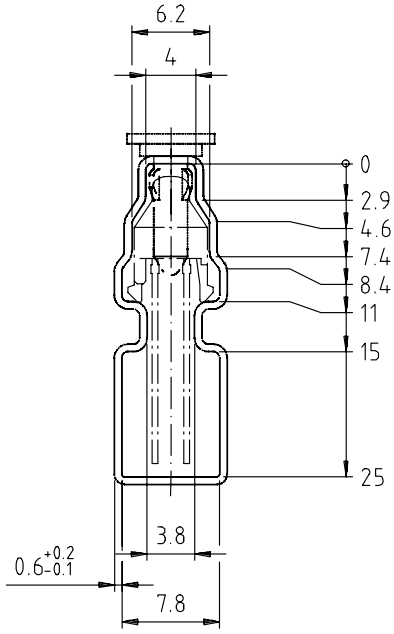

With stopper pins
Tolerance: ±0.5mm
Length: 575±1mm

Drawing-No.: 9.700-5178.01-4
Issue: 1; 25.02.00

15201

Fig. 3

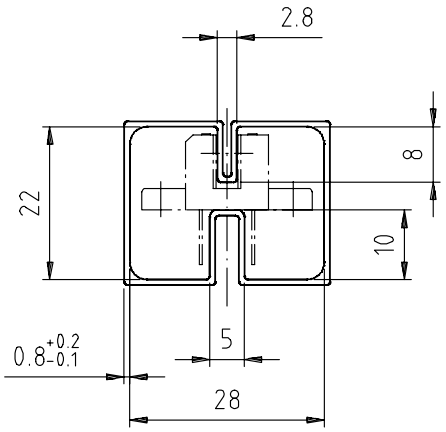

With rubber stopper
Tolerance: ±0.5mm
Length: 575±1mm

Drawing-No.: 9.700-5100.01-4
Issue: 1; 25.02.00

15199

Fig. 4

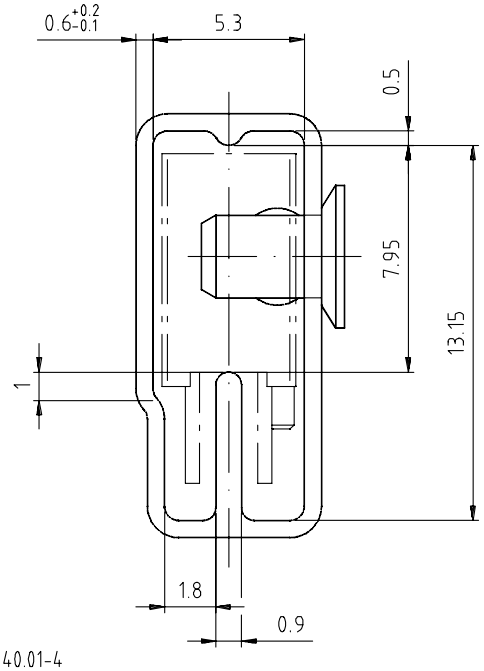

With stopper pins
Tolerance: ±0.5mm
Length: 575±1mm

Drawing-No.: 9.700-5140.01-4
Issue: 1; 25.02.00

15202

Fig. 5

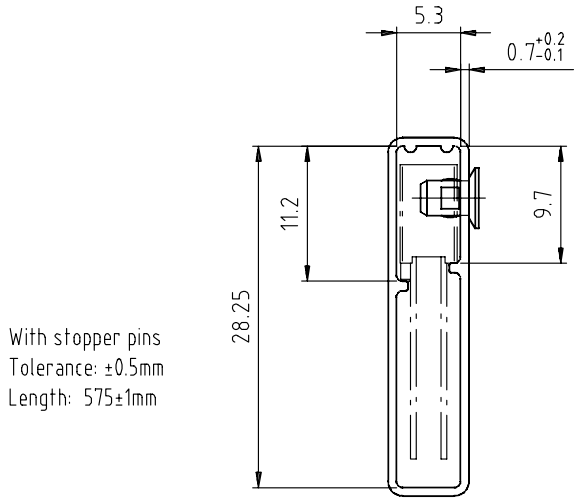
5.3
0.7+0.2-0.1
11.2
9.7
28.25
With stopper pins
Tolerance: ±0.5mm
Length: 575±1mm
Drawing-No.: 9.700-5205.01-4
Issue: 1; 25.02.00
15196

Fig. 6

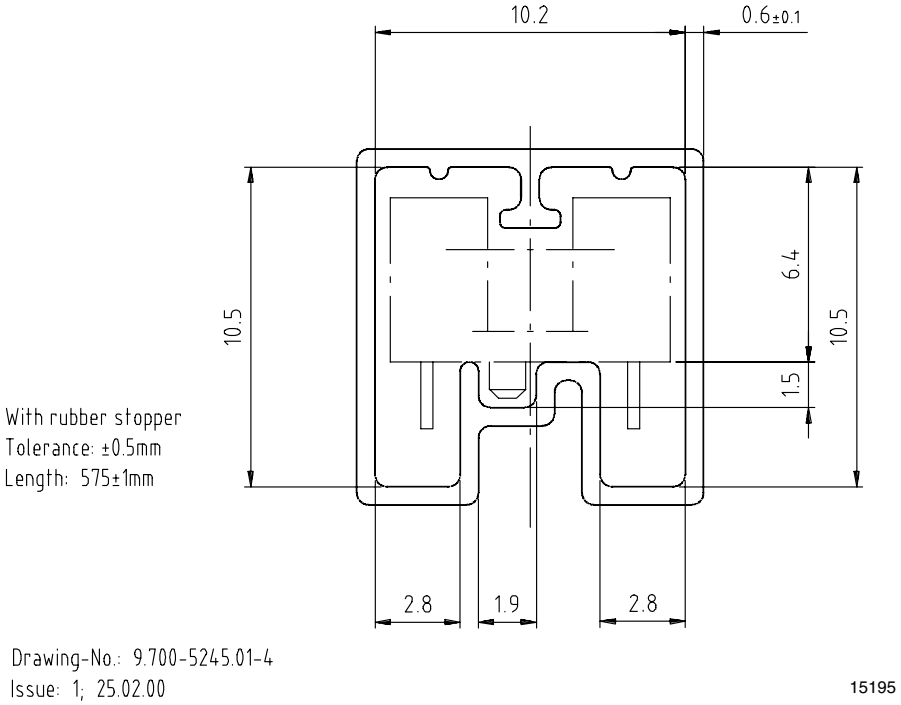
10.2
0.6±0.1
10.5
6.4
10.5
1.5
With rubber stopper
Tolerance: ±0.5mm
Length: 575±1mm
2.8
1.9
2.8
Drawing-No.: 9.700-5245.01-4
Issue: 1; 25.02.00
15195

Fig. 7

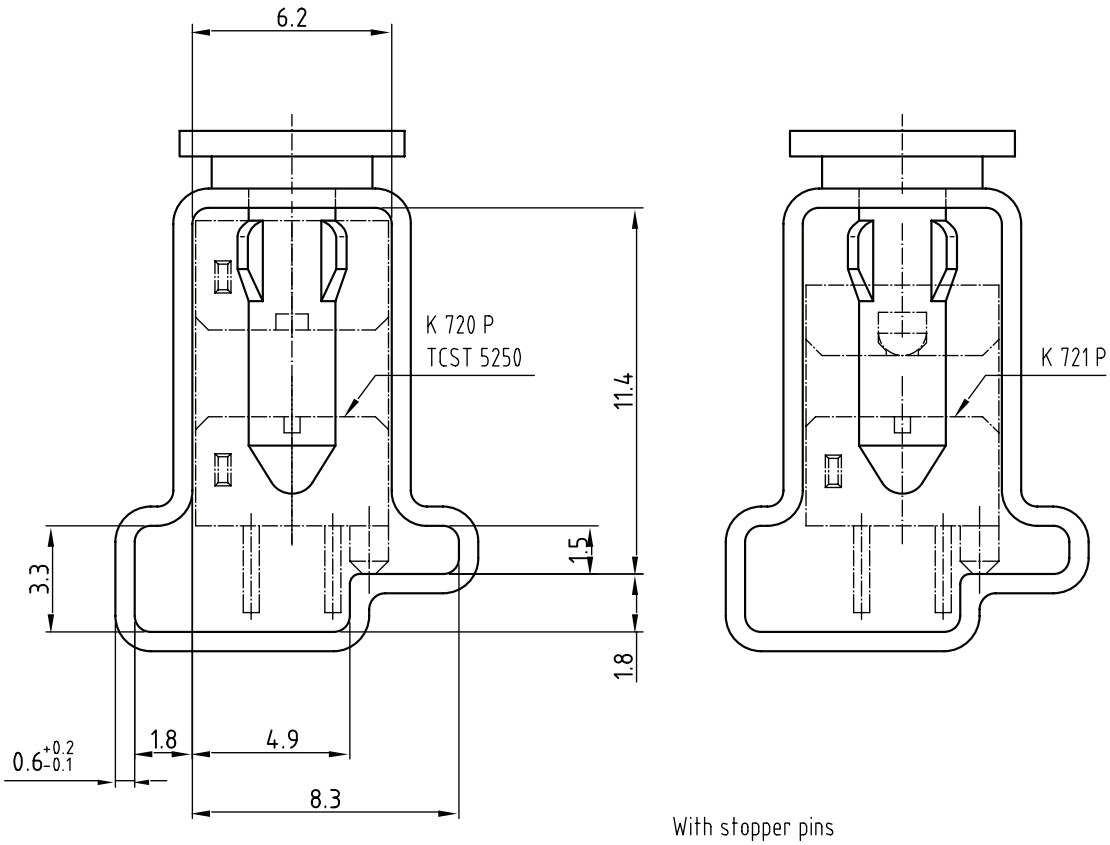

Drawing-No.: 9.700-5222.01-4
Issue: 2; 19.11.04
20257

With stopper pins
Tolerance: ±0.5mm
Length: 450±1mm
All dimensions in mm

Fig. 8

Disclaimer

ALL PRODUCT, PRODUCT SPECIFICATIONS AND DATA ARE SUBJECT TO CHANGE WITHOUT NOTICE TO IMPROVE RELIABILITY, FUNCTION OR DESIGN OR OTHERWISE.

Vishay Intertechnology, Inc., its affiliates, agents, and employees, and all persons acting on its or their behalf (collectively, “Vishay”), disclaim any and all liability for any errors, inaccuracies or incompleteness contained in any datasheet or in any other disclosure relating to any product.

Vishay makes no warranty, representation or guarantee regarding the suitability of the products for any particular purpose or the continuing production of any product. To the maximum extent permitted by applicable law, Vishay disclaims (i) any and all liability arising out of the application or use of any product, (ii) any and all liability, including without limitation special, consequential or incidental damages, and (iii) any and all implied warranties, including warranties of fitness for particular purpose, non-infringement and merchantability.

Statements regarding the suitability of products for certain types of applications are based on Vishay’s knowledge of typical requirements that are often placed on Vishay products in generic applications. Such statements are not binding statements about the suitability of products for a particular application. It is the customer’s responsibility to validate that a particular product with the properties described in the product specification is suitable for use in a particular application. Parameters provided in datasheets and/or specifications may vary in different applications and performance may vary over time. All operating parameters, including typical parameters, must be validated for each customer application by the customer’s technical experts. Product specifications do not expand or otherwise modify Vishay’s terms and conditions of purchase, including but not limited to the warranty expressed therein.

Except as expressly indicated in writing, Vishay products are not designed for use in medical, life-saving, or life-sustaining applications or for any other application in which the failure of the Vishay product could result in personal injury or death. Customers using or selling Vishay products not expressly indicated for use in such applications do so at their own risk and agree to fully indemnify and hold Vishay and its distributors harmless from and against any and all claims, liabilities, expenses and damages arising or resulting in connection with such use or sale, including attorneys fees, even if such claim alleges that Vishay or its distributor was negligent regarding the design or manufacture of the part. Please contact authorized Vishay personnel to obtain written terms and conditions regarding products designed for such applications.

No license, express or implied, by estoppel or otherwise, to any intellectual property rights is granted by this document or by any conduct of Vishay. Product names and markings noted herein may be trademarks of their respective owners.