Online data sheet



TCT-1PAP40253MZ

TCT

TEMPERATURE SENSORS

SICK
Sensor Intelligence.



Illustration may differ

Ordering information

Type	Part no.
TCT-1PAP40253MZ	6043246

Other models and accessories ➜ www.sick.com/TCT

Detailed technical data

Features

Measuring range	–50 °C +150 °C
Sensor element	Pt100
Output signal	Pt100, 4-wire

Performance

Accuracy of sensor element	Class A according to IEC 60751
Transmitter accuracy	≤ ± 1,0 % of span
Transmitter linearity	≤ 0.1 % of span
Response time	Response time t_{50}: ≤ 2.8 s [1)] t_{90} ≤ 9,1 s [1)]

[1)] Depending on sensor configuration, according to IEC 60751.

Mechanics/electronics

Process connection	Compression fitting ¼" NPT, PTFE ferrule
Insertion length/diameter of probe	25 mm / 3 mm
Wetted parts	Stainless steel 1.4571
Pressure resistance	Max. 40 bar with compression fitting with stainless steel ferrule included in scope of delivery
Housing material	Stainless steel 1.4571
Electrical connection	Round connector M12 x 1, 4-pin, IP 67 [1)]
Measuring current	0.3 mA ... 1 mA
Electrical safety	Protection class: III, dielectric strength: 500 V
Protection class III	✓
RoHS certificate	✓
Weight	Ca. 145 g (depending on configuration)
Initialization time	< 10 ms

[1)] IP enclosure rating as per IEC 60529. The enclosure rating classes specified only apply while the device is connected with male cable connectors of the corresponding enclosure rating.

Ambient data

Ambient temperature	–40 °C ... +125 °C

Storage and transport temperature	–40 °C ... +85 °C
Shock resistance according to IEC 60751	500 g
Vibration resistance according to IEC 60751	3 g

Classifications

ECl@ss 5.0	27200208
ECl@ss 5.1.4	27200208
ECl@ss 6.0	27200208
ECl@ss 6.2	27200208
ECl@ss 7.0	27200208
ECl@ss 8.0	27200208
ECl@ss 8.1	27200208
ECl@ss 9.0	27200208
ETIM 5.0	EC001446
ETIM 6.0	EC001446
UNSPSC 16.0901	41112211

Dimensional drawing (Dimensions in mm (inch))

Housing, without process connection

With circular connector M12x1

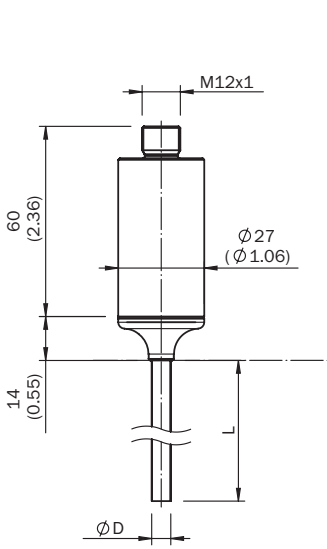

With L-connector (DIN EN 175301-803 A)

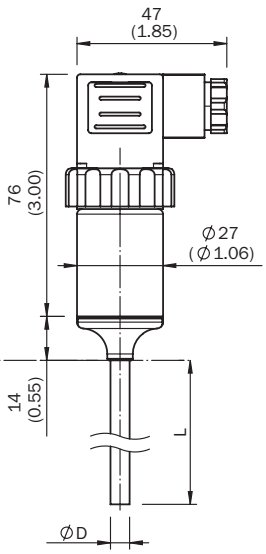

Process connections, conical threads

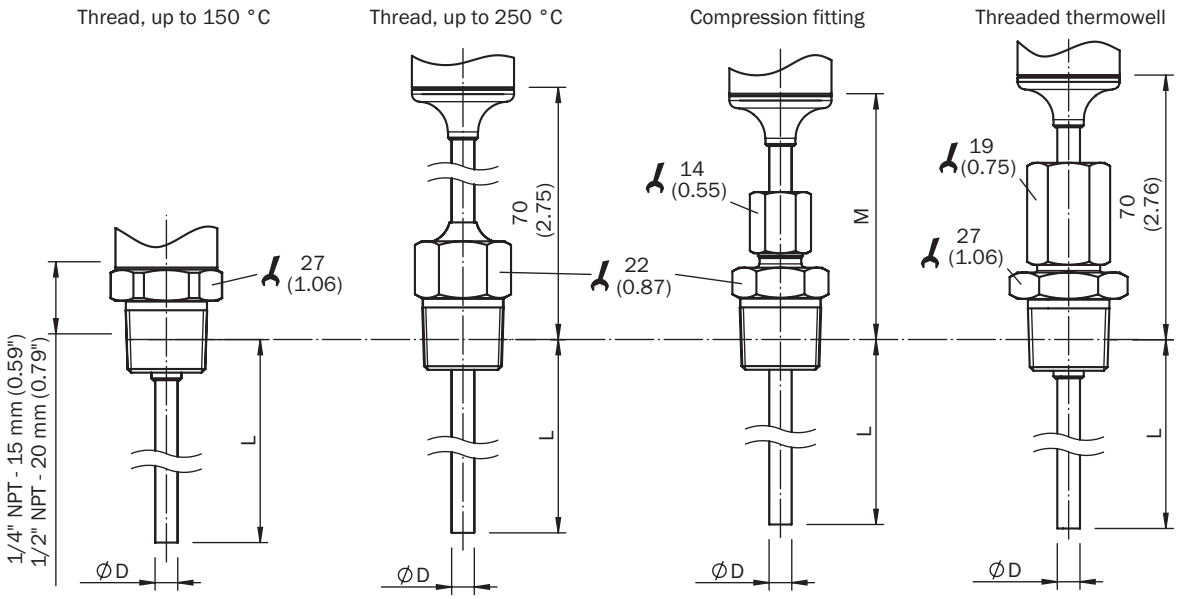

Connection type

Round connector M12 x 1, output signal Pt100

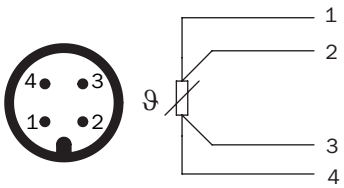

SICK AT A GLANCE

SICK is one of the leading manufacturers of intelligent sensors and sensor solutions for industrial applications. A unique range of products and services creates the perfect basis for controlling processes securely and efficiently, protecting individuals from accidents and preventing damage to the environment.

We have extensive experience in a wide range of industries and understand their processes and requirements. With intelligent sensors, we can deliver exactly what our customers need. In application centers in Europe, Asia and North America, system solutions are tested and optimized in accordance with customer specifications. All this makes us a reliable supplier and development partner.

Comprehensive services complete our offering: SICK LifeTime Services provide support throughout the machine life cycle and ensure safety and productivity.

For us, that is “Sensor Intelligence.”

WORLDWIDE PRESENCE:

Contacts and other locations –www.sick.com